AGENDA ITEM or FINAL CONTRACT REVIEW SUBMITTAL FORM

Agenda Item: Resolution; CBS Special Area Regs.

Action Requested: Board of County Commissioners' Signature

Parties to the Agreement:

Term Begins: **Term Ends:** **Grant Contract #:**

Summary:

Revisions to the CB South Special Area Regulations and Commercial Area Master Plan

Fiscal Impact:

Submitted by: Cathie Pagano **Submitter's Email Address:** cpagano@gunnisoncounty.org

Finance Review: ○ Required ◉ Not Required

Comments:

Reviewed by: Discharge Date:

County Attorney Review: ◉ Required ○ Not Required

Comments:
ok db 3/13/20

Reveiwed by: GUNCOUNTY1\dBaumgarten Discharge Date: 3/13/2020 Certificate of Insurance Required Yes ○ No ◉

County Manager Review:

Comments:

Reveiwed by: GUNCOUNTY1\emense Discharge Date: 3/13/2020

○ Consent Agenda ◉ Regular Agenda ○ Worksession Time Allotted: 10

Agenda Date: 4/7/2020

Revised April 2015

Gunnison County, CO
Community Development Department
221 N. Wisconsin St. Ste. D, Gunnison, CO 81230
Phone: (970) 641-0360
Website: www.gunnisoncounty.org
Email: planning@gunnisoncounty.org

To: BOCC

From: Cathie Pagano, Director of Community and Economic Development

Date: March 3, 2020

Re: CB South Commercial Area Master Plan

The Crested Butte South Property Owners Association has submitted a Land Use Change application to amend the Commercial Area Master Plan and the Special Area Regulations.

The *Crested Butte South Special Area Regulations* were approved by the Gunnison County Board of Commissioners in Resolution 2008-38 (attached). Section 106: *Amendment of Existing Covenants, Restrictions, Resolutions, Rules and Regulations* states, "The Existing Covenants, Restrictions, Resolutions, Rules and Regulations, and no portion of them, shall be amended without the prior written acknowledgement, by motion or recorded resolution, of the BOCC."

The revised Special Area Regulations include the amended Commercial Area Master Plan. The CB South POA approved the Commercial Area Master Plan (CAMP) at their Board meeting on November 13, 2019. Gunnison County staff has participated in the CAMP process and Gunnison County supported the effort through a DOLA grant that was awarded for the project in 2018. CB South hired Cascadia Partners to provide consulting services during the CAMP process.

Staff has reviewed the proposed changes and supports the BOCC approval of the CAMP. The Commercial Area Master Plan Executive Summary and full text of the Special Area Regulations and Commercial Area Master Plan are attached for your review. The commercial area in CB South aligns with the Board's 2019 Strategic Plan through the identification of specific areas for commercial and light industrial uses.

Please feel free to contact me with any questions or concerns. Thank you.

Commercial Area Master Plan (CAMP)

Executive Summary

Charter:

The Crested Butte South Property Owners Association's Strategic Plan identifies four main priorities for the next five years. One of the priorities is to review and amend the Commercial Area Master Plan (CAMP) to ensure that we have the necessary tools and policies to make good decisions and to guide the development process so that our commercial area and village center is in harmony with the Crested Butte South community.

Vision:

The village center is the community's cultural and social focal point that also provides for economic vitality including desired and needed businesses; a diversity of housing types; a variety of public spaces that encourage social and community interaction; a well-connected intermodal transportation system; and sustainable design that incorporates the surrounding scenic beauty.

Planning and Design:

1. **Community Amenities**. The community center will provide for a variety of community amenities that are needed and desired by residents.
2. **Financing**. Ensure development equitably pays for needed infrastructure, public land dedications while also encouraging the desired land use pattern by supporting available financial incentives for development.
3. **Housing**. The village center will provide for a variety of housing types for the varying income levels and demographics found in the greater Crested Butte community.
4. **Infrastructure.** (water needs, sewer capacity, access roads, parking, lighting, fixtures). The development of the village center will ensure adequate infrastructure is available and provided.
5. **Land Use**. The commercial area will provide for a variety of land uses, balancing commercial use with the current and future population of the greater Crested Butte community and allowing for flexibility in use to respond to future needs.
6. **Regulations**. The Special Area Regulations will be revised to implement this plan, reducing the regulations where possible, clarifying and refining permitted and prohibited uses, and ensuring that the public interest is protected.
7. **Sustainability**. Development within the village center shall provide for economic vitality, sustainable building in line with Gunnison County-adopted building and energy regulations, a diversity of housing, and other community social infrastructure, such as daycare, where possible.
8. **Transportation** (bus, bike, pedestrian). The village center will provide a well-connected intermodal transportation system that is connected to the greater Gunnison transit systems.

Timeline:

- **March 2016** – CAMP charter created.
- **July 2016** – Kick-off meeting.
- **February 2017 thru January 2018** – Monthly meetings held with advisory group, community members, Block 6 stakeholders and consultant, Alpine Planning Group (hired consultant).
- **April 2017** – Public forum and community survey to engage ownership on the Special Area Regulations (SAR) rewrite process including Commercial Area Master Plan updates
- **November 2017** – CB South Board of Directors first review of draft SAR
- **February 2018** – Cascadia Partners Consultants, in concert with Gunnison County, review and recommendations for the SAR and CAMP analysis
- **March 2018** – CAMP meeting and public comment session
- **April 2018 – January 2019** – Ballot issue on three stories, board review, proposals and agreements, meetings with County, work sessions with the Board of Directors
- **January 2019 – December 2019** – Negotiate with developers for public interests, meet with Gunnison County, sign agreements for easements, adopt CAMP and presentation to Gunnison County

SCANNED

Context:

1. The CB South community scale is a "village neighborhood" with a maximum population of 4,000 at full build-out in all of CB South
2. Full build-out for all of CB South is approximately 1,600 total units, currently there is 623 units in all of CB South
3. Economic role is one of convenience of local residences and land-use mix is primarily residential
4. The existing CAMP dictates 421,000 to 842,000 sq. ft. of commercial space. This is unsustainable, even when CB South is at full build-out.
5. Proposed CAMP focuses the commercial square footage to approximately 84,000 sq. ft. on a "main street" (Glacier Street)

Survey says:

1. During a survey on June 17th, 2017, 67% of the responding members agreed it was appropriate to allow a greater percentage of residential use in the village center (Block 6)
2. 71% of the responding members identified a pedestrian plaza and community gathering area as the most important community amenity for the village center.
3. Per the POA membership, the top priorities for the development of the village center were to create a well-planned neighborhood with community amenities that provide appealing business opportunities and/or jobs for residents and offer a variety of businesses within the CB South village center community.

Strategic Plan Map (Exhibit A) -

This exhibit illustrates main street building forms, active ground floor locations, sidewalk circuits, on street parking, residential uses and public spaces, and active areas.

Analysis:

1. **Main Street Building Design** – Building form is more important than building use
   Main street building form is required to be 11' to 14' first floor ceiling height. Primarily glass or glazed windows are required on the first floor. 100% residential use allowed with conversion or redevelopment to commercial use over time.
2. **Parking –** A commitment to on street parking and development planning for a commercial village center
   - Parking requirements remain the same for commercial use: 1:1000 sf
   - Parking requirements increase for commercial restaurant/assembly use from 1:1000 sf to 1:300 sf
   - Parking requirements remain the same for multi-family residential use: 1 per bedroom for 1-2 bedroom, 2 per 2+ bedroom units
3. **On-Street Parking** – Slows and calms vehicles on Elcho, Gillaspey and Haverly and creates vitality on Glacier Street (Main Street)
   - 2,270 Linear feet available for development of on-street parking on Elcho, Gillaspey and Haverly allowing for approximately 164 additional on-street parking spaces (parallel and head-in) to be created.
   - 59 private parking spaces are currently available in Pioneer Plaza.
   ***The DRC can increase or decrease the parking requirements for use during review process.**
   Parking shall be maximized within the private land prior to requesting an on-street parking off-set. On-street parking off-set cannot exceed more than 25% of the required parking spaces per developed lot.
4. **Density** – Less density, more green space.
   Northern Block 6, Adagio Properties, proposed concept is a reduction of 33% to what the current SAR allows. The current FAR zoning allows over 400,000 sf on Block 6. By rough calculations, if you assume 1,500 sf per unit on average, then the currently shown massing would yield about 252,000 sf of total development. (148 unit's x 1,500 = 222,000 sf + 30,000 sf commercial proposed)
5. **Height** - Remains at 32' for commercial perimeter (Blocks 4 and 5) and 35' for Block 6. Mechanicals, cornices and parapets can exceed the height requirement up to 4'
6. **Stories** – The Covenants only allow two story buildings, despite the current Special Area Regulations from 2008. In August of 2008, the CB South POA proposed a ballot that would allow for three stories. The ballot failed to achieve the simple majority. The POA Board has commissioned a Covenant Amendment Steering Committee (CASC) to evaluate all of the covenants in CB South and propose updates, changes and amendments. The CB South POA may consider another ballot to allow for three story buildings, which may allow for additional height increase in the future. Garden level basements are allowed under the new CAMP.
7. **Maximum Width of Front Facade** –
   Maximum front façade reduced from 100 linear feet to 60 linear feet maximum, unbroken façade.
8. **Setbacks** –
   Setbacks remain the same with allowances for active space in front of buildings.
   Setback for commercial or mixed-use has changed from 15' to 0' on the Village Perimeter lots.
9. **Land Use Mix** – Building **Form** vs. Building **Use** – see Strategic Plan Map (Exhibit A)
   Active Ground Floor Use Zone (The Commercial Street) is required to have 100% of the ground used for commercial purposes. In the existing SAR, all of Block 6 is required to provide a 33% commercial minimum. The remainder of Block 6 allows for 100% residential **use**, with commercial building **form** required as illustrated on Exhibit A.
10. **Floor Area Ratio**
    No change from 1.68 Floor Area Ratio (FAR). This is a secondary planning tool that does not affect the density of CB South because the requirements, like parking, snow storage and landscaping, reduce the buildable gross floor area.
11. **Snow Storage and Staging Plan**
    A snow storage plan has been created to help guide and maintain public plazas, parking areas, sidewalks and streets within the village center. Commercial snow removal resources are available to maintain a high level of service.
12. **Economic Sustainability**
    Commercial Area Sizes (net leasable) - Typical specialty, off-highway and community centers, such as CB South on a smaller scale, are generally 60,000 to 120,000 sf., based on industry economic sustainability standards.
13. **Build-out Projections**
    170-216 residential units and 86 commercial units estimated based on current projects and proposals in the commercial zone.

Based on an average unit size of 1,200 sq. ft. The commercial area has the potential for 259,000 residential sf. and 103,200 commercial sf.

14. **Population Projections and Public Works**
    Water and sewer operations are sufficient for a maximum population base of approximately 4,000 at full build-out for the entire community including residential (Filings 1 thru 4).
    CB South Metropolitan District has indicated that future ground well pumps and waste treatment needs can be met at these projections.
15. **Public Dedication and Community Benefits –** Land purchase, conveyance, easements and/or dedication:
    A 35' to 40' wide pedestrian focused main street with limited automobile access will give the community safe access and a gathering area for community events. i.e. Octoberfest, farmers market, holiday occasions, etc. Shops and other commercial uses will activate the main street from both sides.
    Two 40' x 40' public dedicated spaces that will be developed as a plaza and park as indicated in the Strategic Plan Map. This includes space for art, seating, views, water, electrical and/or fire features and festive areas at key intersections.
16. **Sidewalk Design** – Safe pedestrian and bike connectivity to the community
    6' wide minimum on Block 6
    10' wide minimum on Glacier Street or main street
17. ***Remainder of Block 6 is required to go through a subdivision process, providing a plat or development plan that illustrates all improvements (roads, utilities, walks, etc.) and applicable dedications to the public.**

CB South POA Responsibilities:

1. Develop and maintain public plaza, public park, restroom facility and bus stop
   Park equipment and fixtures, benches, bike racks, dog stations, trash receptacles, etc.
   Public art and sculptures
   Provide for adequate snow storage
   Gas, electrical and lighting infrastructure

2. Maintain public sidewalks and pedestrian paths (Operations Plan)

3. Regulate and enforce parking requirements (Parking Management Plan)

4. Develop and implement snow storage and removal plan (Snow Removal Plan)

5. Dedicate a funding source for all improvements

6. Develop a plan for on-street parking with Gunnison County approval

7. Conduct a traffic study to support future concerns for all of CB South

8. Ensure adequate infrastructure is provided for

9. Architecture oversite and review of all developments within the commercial area to comply with Design Standards

Conclusions:

1. The CAMP contains less prescriptive language to encourage and activate development within the village center.
2. Allowing 100% residential in strategic areas provides for a diversity of housing needs and supports the local economy.
3. Building **form** versus Land **use** provides flexibility for redevelopment to occur over time and fulfills the immediate needs of the community. Use changes over time, building form doesn't.
4. The CAMP plan allows for light manufacturing and craft business (ski manufacturing, wine making, ...), but still prohibits industrial use.
5. Plaza and park spaces at focal intersections draw visitors into the commercial core and help to activate the main street.
6. On-street parking is very important for local businesses and will be included as much as possible.

SECTION 13-109: *Signs.*
SECTION 13-110: *Off-Road Parking and Loading.*
SECTION 13-111: *Landscaping and Buffering.*
SECTION 13-112: *Snow Storage.*
SECTION 13-113: *Fencing.*
SECTION 13-114: *Exterior Lighting.*
SECTION 13-115: *Reclamation and Noxious Weed Control.*
SECTION 13-116: *Grading and Erosion Control.*
SECTION 13-117: *Drainage, Construction and Post-Construction Storm Water Runoff.*
SECTION 13-118: *Water Impoundments.*
SECTION 13-119: *Standards to Ensure Compatible Uses.*

PRESENT LAND USE; identify present land uses and locations and sizes of structures that exist on the property:

mixed-use Commercial and Residential

IDENTIFY PREVIOUSLY-APPROVED USES. List Land Use Change Permits and/or subdivision approval have been previously approved for the property, and the year in which they were approved.

Special Area Regulations
BOCC RESOLUTION NO: 2008-38

CHARACTERISTICS and CURRENT CONDITION OF LAND. List physical characteristics and conditions of the land, including streams, irrigation ditches, ponds, soils, roads, vegetation, geologic hazards, any work that has been done to clear the property, etc.)

EXCELLENT

AFFECTED LANDOWNERS. List all landowners and land uses that are within 500 feet of the boundaries of the entire parcel on which the land use change is proposed, including all properties separated from the parcel by a road or would be adjacent if the road did not exist. The best-available, most current information of this listing of current owners is in the Gunnison County Assessor's Office: Approximately 957 members/units

AFFECTED OWNER NAME	PARCEL LOCATION RELATIVE TO PROPOSED LAND USE CHANGE PARCEL	CURRENT LAND USE ON ADJACENT PARCEL

VICINITY MAP: (Submit 1 copy) The attached sample vicinity map can be used as a guide. Minimum scale of 1"=100' is preferred. Sheet size cannot exceed 34" x 36". (Applications for plats of constructed condominium or townhome projects that have been approved by the County shall not be required to submit a site plan.) At a minimum, include the following: attached

- **PROPERTY LOCATION AND NEARBY PARCEL SIZES AND LAND USES**. Location of the property on a United States Geological Survey quadrangle map or on a recorded plat if the proposed development is within an approved subdivision, with the location highlighted so that it is easy to see, and that clearly shows sizes of parcels and land uses within a half-mile of the proposed project.
- **ROADS**. All U.S. and state highways and nearest County or Forest Service, Bureau of Land Management, and/or subdivision/private roads that provide access to the proposed project.
- **EASEMENTS.** Easements recorded or historically used that provide access to or across, or other use of, the property.
- **BOUNDARIES OF DISTRICTS, MUNICIPALITIES OR SUBDIVISIONS**. Locations of special district boundaries, municipalities or residential subdivisions within a half mile of the property.
- **PROXIMITY OF MINING OR PROCESSING ACTIVITY**. Any parcel located within 1,000 feet of the property proposed for land use change on which there exists an operation involving mineral exploration or extraction or construction materials processing.

SITE PLAN/LAYOUT. (Submit 1 copy) This is a drawing; the attached sample site plan can be used as a guide. Minimum scale of 1"=100' is preferred. Sheet size cannot exceed 34" x 36". When multiple sheets are used, provide an index sheet stating the contents of each sheet. All the listed information MUST be shown on the drawing before you can be scheduled to meet with Planning Commission. (Applications for plats of constructed condominium or townhome projects that have been approved by the County shall not be required to submit a site plan.)

- **ALL PROPERTY PROPOSED FOR DEVELOPMENT**. Include all land proposed for immediate and anticipated for future development. This can be a simple, hand-drawn layout, but it must be legible, clearly marked, drawn to scale, and signed and dated by the person who drew it.
- **PHASING.** Any proposed phases of the development, and their timing.
- **TOTAL ACREAGE OF CONTIGUOUS PROPERTY OWNED BY THE APPLICANT.** Total acreage and location of all contiguous property owned by the applicant.
- **TOTAL ACREAGE IN PROPOSED LAND USE CHANGE PERMIT AREA**. Total acreage of the site on which the applicant wants to obtain approval for the Land Use Change Permit.
- **ADJACENT LOT SIZES.** Lot size(s) of properties adjacent to and in the impact area of the site proposed for the land use change.
- **ADJACENT LAND OWNERS.** Names and actual land uses of adjacent landowners (including federal, State of Colorado and other publicly owned lands), to the site (in addition to the separate narrative listing). This includes properties that may be across a road, stream or river from the applicant's property.
- **UTILITY LOCATIONS IN AREA**. Location of all existing utilities on the property (septic tanks, wells, electric, gas, telephone or cable lines) that will serve the property.
- **TOPOGRAPHIC FEATURES**. Streams, lakes, ponds, wetlands, contour lines and elevations, any prominent ridgelines, and any other significant visual resource areas on the property.
- **LIVESTOCK DRIVES AND FENCELINES**. Historic or recorded stock drive easements crossing or adjoining the development property, including the location of any existing fences along property lines, and the location of new fences or other obstacles proposed to be built across any such stock drive.
- **IRRIGATION DITCHES**. The location(s), and name(s), of any irrigation ditch crossing or adjoining the development property, as available from the Colorado Division of Water Resources, or ditch commissioner's records.
- **DRAINAGE**. Drainage patterns, on and adjacent to the project property.
- **DRIVEWAYS AND PARKING**. Driveways/parking areas, both existing and proposed.
- **EXISTING STRUCTURES**. Locations and sizes of existing structures.
- **PROPOSED STRUCTURES**. Locations and sizes of proposed structures.
- **BOUNDARIES.** Boundaries and related measurements.

ACCESS: Indicate the name of the road or highway (name and number) that is the primary access for the proposed land use change. If either a County Access Permit, or a Colorado Department of Transportation Highway Access Permit exists for existing access, submit a copy of the permit. Submit copies of deeded easements over the area of private or public lands that

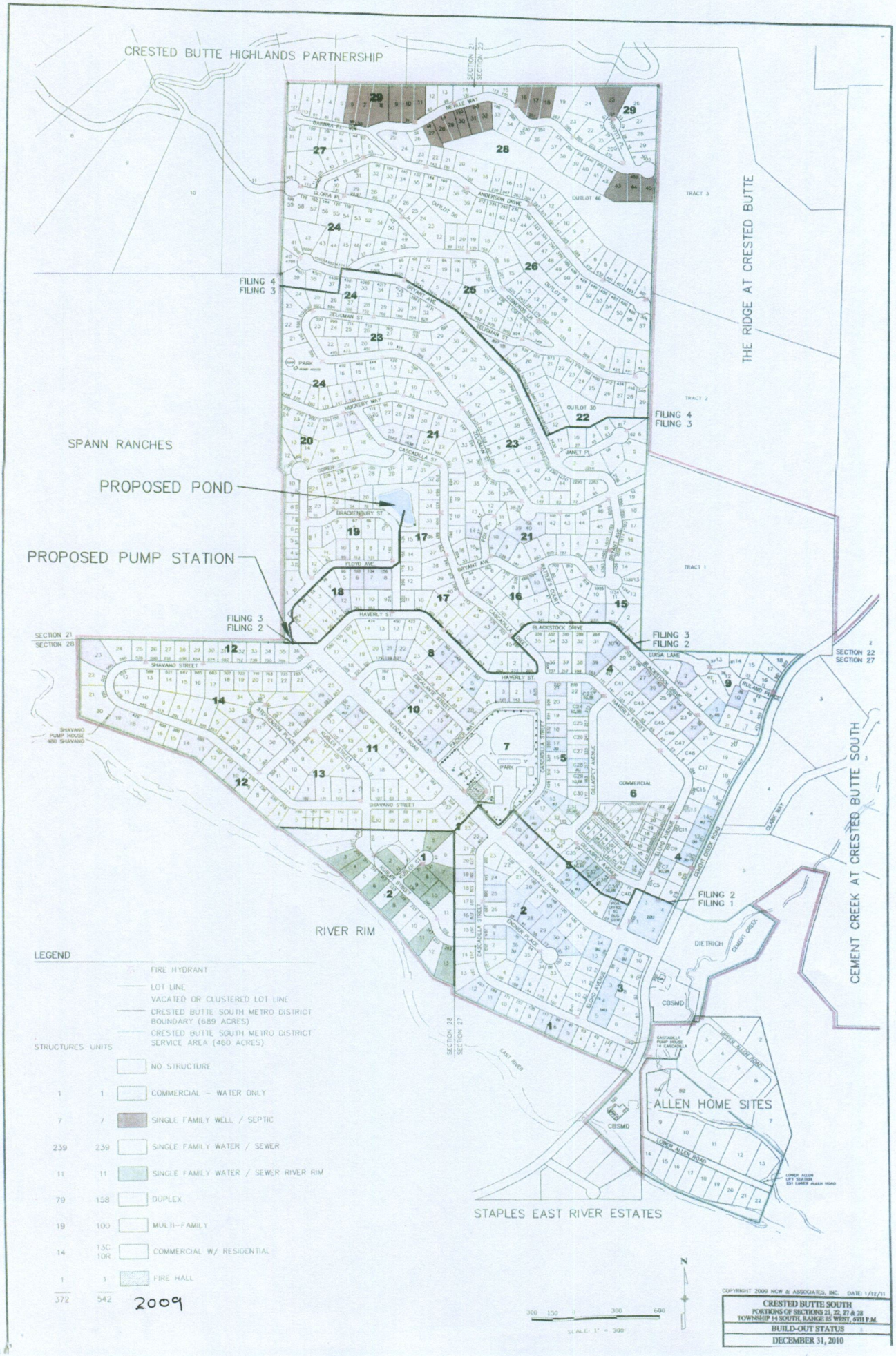
CRESTED BUTTE HIGHLANDS PARTNERSHIP
THE RIDGE AT CRESTED BUTTE
SPANN RANCHES
PROPOSED POND
PROPOSED PUMP STATION
FILING 4
FILING 3
FILING 3
FILING 2
FILING 2
FILING 1
SECTION 21
SECTION 22
SECTION 28
SECTION 27
RIVER RIM
CEMENT CREEK AT CRESTED BUTTE SOUTH
ALLEN HOME SITES
STAPLES EAST RIVER ESTATES
LEGEND
FIRE HYDRANT
LOT LINE
VACATED OR CLUSTERED LOT LINE
CRESTED BUTTE SOUTH METRO DISTRICT BOUNDARY (689 ACRES)
CRESTED BUTTE SOUTH METRO DISTRICT SERVICE AREA (460 ACRES)
STRUCTURES UNITS
NO STRUCTURE
1 1 COMMERCIAL - WATER ONLY
7 7 SINGLE FAMILY WELL / SEPTIC
239 239 SINGLE FAMILY WATER / SEWER
11 11 SINGLE FAMILY WATER / SEWER RIVER RIM
79 158 DUPLEX
19 100 MULTI-FAMILY
14 13C 10R COMMERCIAL W/ RESIDENTIAL
1 1 FIRE HALL
372 542
2009
SCALE: 1" = 300'
COPYRIGHT 2009 NCW & ASSOCIATES, INC. DATE: 1/12/11
CRESTED BUTTE SOUTH
PORTIONS OF SECTIONS 21, 22, 27 & 28
TOWNSHIP 14 SOUTH, RANGE 85 WEST, 6TH P.M.
BUILD-OUT STATUS
DECEMBER 31, 2010

will provide access to the parcel proposed for land use change.

1. County Access Permit attached: [ ] n/a
2. Colorado Department of Transportation Highway Access Permit attached: [ ] n/a
3. Easement documents attached: [ ]

TRAFFIC: Estimate traffic to be generated by the proposed project, including whether it will be residential, commercial or industrial, or a mix of all uses, and the estimated numbers of vehicle trips per day.

mixed-use

1. Residential trips (estimate ten trips per day per dwelling unit:
   Estimated NO CHANGE FROM ORIGINAL MASTERPLAN.
2. Commercial or industrial uses (describe type and/or weight of vehicles, estimated trips per day and time of day trips will occur):
   Delivery trucks, occassional semi-trucks, snow removal equipment
3. No additional traffic will be generated by this land use change. [ ]
4. Easement documents attached: [ ]

PLEASE CHECK THE BOX AND COMPLETE THE SECTION THAT APPLIES TO THIS APPLICATION:

WATER SUPPLY: Crested Butte South METRO DISTRICT

[X] **WILL TIE ONTO AN EXISTING CENTRAL SYSTEM.** Indicate the name of the municipality, district or other existing system which will provide the service. Attach a copy of a notarized letter of intent to provide, signed agreement or contract between the applicant and the supplier indicating the amount of water and conditions of tie-on.

[ ] **WILL PROVIDE NEW CENTRAL SYSTEM.** Attach copies of approved well permits, court decrees, augmentation plan, or other deeded water rights. Indicate what operational system is proposed, including treatment options and proposed plans for operation and maintenance, and including information about water available for fire suppression.

[ ] **WILL HAVE AN INDIVIDUAL WELL OR SPRING SYSTEM.** List, and attach copies of approved well permits, court decrees, augmentation plans, or other deeded water rights. If the source of the supply is not located on your property, indicate on the vicinity map where it is located.

WASTEWATER TREATMENT:

[X] **WILL TIE ONTO AN EXISTING CENTRAL SYSTEM.** Indicate which system (municipal, special district, subdivision, as applicable), and attach a copy of a notarized letter of the service provider's intent to provide, or contract between applicant and the provider that the provider has capacity and is willing to provide.

[ ] **WILL PROVIDE NEW CENTRAL SYSTEM.** Indicate what operational system is proposed, including treatment options and proposed plans for operation and maintenance, as required by the Colorado Department of Public Health and Environment.

[ ] **INDIVIDUAL SEWAGE DISPOSAL SYSTEM(S).** Contact the Gunnison County Environmental Health Office (641-5105) to determine if your existing system is adequate for the proposed use, and/or requirements for any new system. You will be required to pay the standard site-visit costs that may be necessary for that office to review your proposed

site. An individual sewage disposal system permit will be issued only after a land use change permit has been approved, unless the Planning Department approves the issuance of a system repair permit for an existing system.

IRRIGATION DITCHES AND ADJACENT AGRICULTURAL OPERATIONS: If irrigation ditches are located on or adjacent to the parcel proposed for land use change, list their locations, and names of owners that are available from the applicable Colorado Division of Water Resources office, or ditch commissioner's records. Setbacks and other elements of the proposed site plan are required to comply with Section 5-209 of the *Gunnison County Land Use Resolution, Development That Affects Agricultural Lands.* yes, but under county Jurisdiction

☐ There are no irrigation ditches on or adjacent to the subject parcel.

☐ **COPY OF TAXES PAID:** Submit a copy of certification from the Gunnison County Treasurer's Office indicating that all real property taxes applicable to the subject parcel on which the land use change is proposed have been paid up to the year in which the application is made.

MINERAL RESOURCES:

Is this property known to contain, or reasonably believed to contain mineral resources?

☐ Yes ☒ No

Has this area been the site of underground or surface mining activity in the past?

☐ Yes ☒ No

Has an original patent been issued to this property under the mining laws of the United States or Colorado?

☐ Yes ☒ No

On a separate sheet, list the owners or lessees of underlying mineral estates, if applicable.

RESTRICTIVE COVENANTS. List any restrictions imposed by recorded protective covenants or deed restrictions on the property proposed for land use change; attach a copy of the document (covenants, deed restriction or conservation easement). If the property is subject to restrictions imposed by a homeowners or property owners association, provide a letter from the authorized representative approving the concept of the project.

1. Covenants and/or deed restriction document attached: ☐ attached.
2. Homeowners'/ property owners' association letter attached: ☐
3. Not applicable: ☐

CRESTED BUTTE SOUTH

COVENANTS AND RESTRICTIONS
Book 420 page 404
Date: August 20, 1970
Filed: August 26, 1970
Reception No. 280965

THIS INDENTURE, made and entered into this 20th day of August, 1970, by this CRESTED BUTTE LAND COMPANY (hereinafter the "Company"), a Colorado corporation, having ownership of a tract of ground designated as Crested Butte South to be platted as a subdivision, more particularly described as:

Those portions of the NW1/41SW1/4 and the N1/2 of Section 27, lying west of the Cement Creek road, as well as all of the N1/2NE1/4 of Section 28, and the E1/2SE1/4 and the SE1/4NE1/4 of Section 21, and the W1/2SW1/4 and the SW1/4NW1/4 of Section 22, all in Township l4 South, Range 85 West, 6th P.M. in Gunnison County, Colorado.

WHEREAS, the Company is causing the above mentioned land to be platted into lots and blocks as shown on various plats, recorded or to be recorded, but all nevertheless subject to the provisions of the Indenture as fully as if now recorded, all to be filed in the office of the Clerk and Recorder of Gunnison County, Colorado; and

WHEREAS, the Company intends to develop and improve the said tract of land and lay out and open up the streets shown on said plats, and offer for sale the lots and parcels included in said tract; and is desirous of subjecting all of said tract of land and the lots and parcels shown on said plats to certain covenants, easements, restrictions, conditions and charges, as hereinafter set forth;

NOW, THEREFORE, WITNESSETH that the Company does hereby impose and charge all lots, blocks and parcels in Crested Butte South, with the covenants, agreements, easements, restrictions, conditions and charges hereinafter set out, for the benefit of the Company and all purchasers; and with the intention that each purchaser and the Company may enforce the provisions hereof, as follows (streets and roads and certain lots and parcels excepted):

1.00 DEFINITIONS

1.01 As used herein, the following terms shall be construed to have the meaning set forth thereafter:

1.01-1 "Owner" shall mean any person or combination of persons; firm; partnership; or corporation owning any lot or lots in fee.

1.01-2 "Purchaser" shall mean any person or combination of persons; firm; partnership; or corporation holding the right to receive fee ownership by means of a contract for purchase of any lot or lots.

1.01-3 "Lot" shall mean any platted lot within Crested Butte South; or any combination or contiguous lots therein upon which a cluster development declaration has been recorded.

1.01-4 "Committee" shall mean the Crested Butte South Improvement Committee.

1.0 l-5 "Residential unit" shall mean living quarters or a dwelling designed to accommodate a one family unit and containing at least one bedroom; one bathroom, one living room and one kitchen.

1.01-6 "Cluster development" shall mean the assembly of two or more adjoining residential lots into one parcel for the purpose of constructing one structure containing not more than the total number of residential units which could have been built on all of the lots so united.

1.01-7 "Commercial lots" shall mean those lots designated as commercial property therein and of which the usage is restricted to trade or business.

1.01-8 "Dwelling place" shall mean a structure containing one or more residential units.

1.01-9 "Person" shall mean any person, combination of persons, firm, company, association or corporation.

2.00 IMPROVEMENT COMMITTEE

2.01 There is hereby created the Crested Butte South Improvement Committee, which shall be the Company until such time as 100 of the lots in Crested Butte South have been deeded to their owners, at which time the Company shall appoint four of said purchasers to serve on the Committee with the Company, two of which shall serve for one year, and the balance for two years. Thereafter the four other members of said Committee shall be elected by all the landowners in Crested Butte South for two-year terms, and when 80% of all lots in Crested Butte South are deeded to their owners, the Company shall resign from the Committee and thereafter the Committee shall consist of five persons.

2.02 The Committee may make and adopt its own bylaws for procedure; and it shall have the following powers and duties:

2.02-1 To incorporate as a non-profit corporation or association.

2.02-2 To fill vacancies occurring on the Committee.

2.02-3 To adopt such reasonable rules and regulations and provide such means and employ such agents as will enable it adequately and properly to carry out its duties.

2.02-4 To approve, or recommend changes in, building plans and specifications, grading, business signs and related matters.

2.02-5 To disapprove unsatisfactory plans and specifications.

2.02-6 To determine, collect, expend and account for monies of the Maintenance Fund as provided elsewhere herein.

2.02-7 To provide for lighting, improving, clearing and maintaining walks, streets and parks.

2.02-8 To provide for the collection and disposal of trash and rubbish.

2.02-9 To employ watchmen and fire marshals.

2.02-10 To care for vacant and unattended land on which the maintenance charge is being paid; and do those things desirable, in the opinion of the Committee, to keep such property in good order.

2.02-11 To do such other things as will tend toward the welfare and benefit of Crested Butte South and the landowners therein.

2.02-12 To enforce the restrictions, covenants, easements, conditions and charges herein contained.

2.02-13 To hold land and convey the same.

3.00 MAINTENANCE FUND

3.01 All land included and shown on the plats of Crested Butte South (except land reserved for community uses and purposes), whether owned by the Company or by others, shall be subject to an annual maintenance charge as set forth below. A purchaser of any lot within Crested Butte South who has not received a deed, but who has the right to receive one under a contract, shall be deemed an owner for the purposes of this section only.

3.02 Such annual maintenance charge shall be at the rate of $40.00 per year for each single family dwelling; $50.00 per year for each residential unit in a multi-family dwelling; $8.00 per year for each unimproved lot; and $100.00 per year for each commercial lot with a structure on it. Block 6 shall be considered to have 20 lots upon it for the purpose of this section.

3.03 The annual maintenance charge shall be payable each year hereafter commencing January 1, 1971, annually in advance, for the purpose of creating and maintaining a fund to be known as the Maintenance Fund. Such annual charge may be adjusted from year to year by the Committee in its absolute discretion as the needs of the Committee may require; but in no event shall any increase exceed 10% in any year without the affirmative vote of a majority of the then owners of lots, each owner being entitled to cast one vote for each lot owned by him.

3.04 The Committee shall apply the funds thus received, so far as the same may be adequate, to its costs and expenses in performing its duties. The Committee need not duplicate any service available from any governmental agency, public authority or improvement district.

3.05 The annual charge for maintenance shall be a lien or encumbrance on the land against which assessed, and the purchase of any such land shall be construed as a covenant to pay such charges. The Committee shall have the right and power to enforce the lien hereby imposed in its favor, to the same extent (including foreclosure and sale) and subject to the same procedure, as in the case of a mortgage under the applicable law; and may recover costs and attorney fees, as well as interest at the rate of 8% per annum from March 1 of the year in which due. The Committee shall send a written statement each year as soon as practicable stating the amount of the annual charge and unless the purchaser or owner shall pay the same by March 1, it shall be deemed delinquent. The lien reserved hereunder shall be subordinate to any trust deed, mortgage or mechanic's lien insofar as priority at any given time is concerned; but the same shall be a continuing lien and may be enforced against any successor in interest.

3.06 Prior to beginning to serve, the Committee members (including the Company) shall accept in writing the trust, duties and obligations imposed by this Indenture, and agree to discharge the same without charge for their services provided, that until the full Committee is formed and functioning, for the collection and disbursement of the Maintenance Fund hereby established, and for the overhead and clerical expense in connection with the administration thereof, the Company shall be entitled to charge 15% of the amount of the expenditures made by it from said funds, including such expenditures as payment to the Company at current market prices for labor and material furnished and work done by it.

3.07 The Committee shall exercise its discretion as to the expenditures from said Fund for any of the purposes anticipated, and its judgment in that regard shall be conclusive on all parties. The Committee does not insure or guarantee the adequacy of the Fund provided for hereby for the purposes hereinbefore set forth.

3.08 Any or all of the rights, duties or powers hereby reserved to the Company or the Committee may be assigned or transferred to any one or more public bodies, improvement districts, associations or corporations which will agree to assume said rights and duties and carry out and perform the same. Any such transfer shall be evidenced by an instrument of record evidencing the transfer and the acceptance, and obligating the transferee to the duties herein imposed, the Company and/or the Committee thereby being released there from.

4.00 ARCHITECTURAL CONTROL

4.01 No building, structure, wall, fence, or addition or exterior alteration to any building, structure, wall or fence shall be commenced, erected or maintained unless and until the plans and specifications showing the nature, kind, shape, height, materials, floor plans, location and approximate cost of the same shall have been submitted to the Committee for its consideration and approval or disapproval in writing.

4.02 All structures shall be designed by a registered architect or professional engineer, or an equally qualified person or firm.

4.03 The Committee shall review all plans and specifications with regard to quality, materials and color; topography, setback, finished grade elevation, driveways, planting and parking facilities; as well as harmony of exterior design with existing or planned structures adjacent thereto.

4.04 No metal, plastic, asbestos or asphalt siding materials shall be permitted on other than roof surfaces; but the Committee may grant variances in appropriate cases.

4.05 The event said Committee fails to act within 30 days after said plans and specifications have been submitted to it; such approval will not be required and this covenant deemed complied with. No person, however, shall commence any such construction after notice of disapproval or until 30 days have elapsed from time of submission of the plans and specifications; and the Committee may proceed by such means as it deems best advised to enforce the provisions hereof if a violation of these provisions occurs.

5.00 LAND USE

5.01 With the exception of those areas designated as Commercial Lots, or set aside for community purposes, all lots shall be known and designated as residential lots; and no structure shall be permitted or placed, or altered or erected on any such lot in violation of the requirements hereof. Only single or multi-family dwelling places, not exceeding two stories in height, plus any garden-level basement or first story, may be erected or placed; together with a private garage, attached or unattached, for not more. than two vehicles for the first residential unit, and one vehicle for each additional residential unit. Nothing herein contained shall prevent the placement of a child's playhouse of reasonable size and location, and neat appearance.

5.02 Only one structure for use as a dwelling place shall be constructed on any lot or cluster development. One outbuilding which may be a garage or storage building or a combination of the two may also be constructed.

6.00 NON-RESIDENTIAL AREAS

6.01 All of the land in Crested Butte South, except as hereinafter provided, shall be used for residential purposes only. Certain lots and blocks may be devoted in whole or in part to use as a business or shopping center, and buildings may be erected thereon and activities carried on thereon of a business or commercial nature, excluding any manufacturing. Such areas shall be bound by the setback provisions hereof; and all such parts of Crested Butte South shall be identified on the recorded plat.

6.02 Buildings for non-commercial and community purposes (educational, recreational, fire and police protection or other civic purposes) may be erected on Lot 1, Block 5; and Block 7, designated "Reserved for Community Uses and Purposes"; provided, however, that no building or structure shall be erected or maintained thereon until there shall have been brought into being an agency or body capable of receiving such land, and the Committee shall have executed its deed conveying such land to such agency or body designating the community use to which the same shall be put.

7.00 TEMPORARY STRUCTURES PROHIBITED

7.01 No basement, mobile home, trailer, tent, shack, garage, barn or any outbuilding erected on any lot at any time shall be used as a residence permanently or temporarily; nor shall any structure of temporary nature be used as a dwelling. No trailer capable of habitation or containing living quarters shall be parked on any lot or street governed hereby for more than one consecutive overnight period; provided, however, that a trailer or trailers, used temporarily by a construction contractor or sub-contractor as an office, supply facility, tool room or warehouse, may be located on any lot during the actual period of construction on that lot, but not to exceed a total of 90 days.

8.00 ANIMALS

8.01 No animals, livestock or poultry of any kind shall be raised, kept or bred on any lot in Crested Butte South; except that a reasonable number of family dogs, cats, birds and fish may be kept provided that they are not kept or bred for any commercial purpose, nor allowed to annoy others.

9.00 SETBACK REQUIREMENTS

9.01 No building, or any part thereof, except as otherwise provided herein, shall be erected or maintained closer than 25 feet to any street, nor closer than 25 feet to the rear line of any lot.

9.02 Free or open spaces shall be left on both sides of a residential structure of a minimum of ten feet in width; provided, however, that a dwelling place may extend across lot lines into two or more lots.

9.03 Unenclosed covered porches or entryways, entrance steps, bay windows, balconies, and roof overhangs shall not be included in determining setbacks if the same do not extend more than six feet from the basic structure.

9.04 The Committee shall in all cases have the right to determine which are the front and rear lot lines, and to grant variance of the above in the case of irregularly shaped lots or unusual conditions. The Committee's determination shall be final and binding.

10.00 MINIMUM SIZE

10.01 No residential structure which has an area of less than 1,500 square feet, exclusive of porches, garages and basements, if a single family residence; or less than 800 square feet per residential unit, not including porches, garages and basements, if a multi-family structure, shall be erected or placed on any lot or cluster development.

11.00 NO CONSTRUCTION IN ABSENCE OF WATER AND SEWER

11.01 No structure shall be built on any lot until the road, water and sewer adjacent to the lot involved shall be installed and functional, nor shall any individual water supply or sewage disposal system be permitted on any lot. All residential structures shall be connected to the water and sewer system provided.

12.00 SIGHT DISTANCE AT INTERSECTIONS

12.01 No fence, wall, hedge, shrub or structure which obstructs sight lines at elevations between two and six feet above the adjacent road surface shall be permitted to remain on any corner lot within the triangular area formed by the intersecting street property lines and a line connecting them at points 25 feet from the intersection of such lines, unless variance is granted by the Committee. Nothing herein contained shall require the removal of earth to conform hereto.

13.00 PARKING

13.01 No automobiles, trailers, trucks, snowmobiles or other vehicles or objects of any nature shall be parked on or in any street or road governed hereby while there is any discernible snow upon adjacent non-

public ground. The owner of every lot shall provide off-street parking for two vehicles for the first residential unit and one additional space for each additional unit.

14.00 CLUSTER DEVELOPMENT

14.01 Nothing herein contained shall prevent the assembly of lots by any common owner for the purpose of cluster construction. Such owner shall record his declaration of cluster usage, in form as hereafter provided, and thereafter the lots described by such declaration shall be considered and treated as one parcel or lot.

14.02 After recording such declaration, a cluster dwelling place may be constructed anywhere thereon, having regard to setback and height. requirements and plan approval by the Committee.

14.03 With the exception of appropriate garage structures, no other buildings may thereafter be erected anywhere on the parcel bound by the cluster declaration. No variance may be granted by the Committee.

14.04 Form of Cluster Declaration:

CLUSTER DECLARATION

The undersigned, for myself and for my heirs, successors, personal representatives and assigns, do hereby declare my election to group Lots _____, inclusive, Block _____, Crested Butte South, ____ Filing, into one plot, to be henceforth maintained as one parcel, in order that I may build thereon one structure containing a maximum number of residential units totaling the number permitted on each separate lot in the absence of this declaration, multiplied by the number of lots bound hereby. I hereby forever waive and disclaim any right to construct any other residential units on said parcel or to separate the same, binding my heirs, personal representatives, successors and assigns hereby; and agree that all other restrictive covenants applicable to the land involved shall continue in full force and effect.

STATE OF COLORADO)
County of _____) ss.

The foregoing was acknowledged before me this _____ day of _____, 19____.

_____
Notary Public

My Commission expires:

15.00 UTILITY EASEMENTS

15.01 An easement for the placement and servicing of utilities, eight to ten feet in width, is reserved across the front and/or rear of each lot, and along the sidelines of some lots, as shown in the recorded plat.

15.02 The owner of each lot shall, at his own cost and expense, keep and maintain that portion of the easement within his own property line at all times in good condition of repair and maintenance, and neither erect nor permit the erection of any building or structure of any kind within said easement which might interfere in any way with the proper maintenance, use, operation, repair, construction or patrol of any utility services located therein.

15.03 Any utility company or improvement district with facilities therein shall have the right to enter said easement as necessary for the purposes for which such easements are provided.

15.04 Any easement platted may be vacated by the Committee to permit cluster development; provided that the owner of the lot or lots involved grants an equivalent or commensurate easement providing similar access for utilities and connecting with other similar easements.

16.00 LOCATION OF UTILITIES

16.01 All utilities shall be located underground; and no wire, pipe or pole (except poles for street lighting) shall be visible.

16.02 No radio or television aerial or cable shall be installed or maintained where visible from the exterior of any building.

17.00 FILL DIRT

17.01 Where fill is necessary on a building site to obtain proper topography and landscaping, it shall be free of waste material and not contain trash, garbage, ashes or tree limbs or stumps. Any excess earth remaining after excavation shall be removed from the building site and deposited within Crested Butte South where directed by the Committee at the expense of the lot owner.

18.00 LOT APPEARANCE

18.01 The appearance of every lot governed hereby shall be maintained in a neat and attractive manner. Once the surface cover thereof is disturbed or changed in any manner, the owner or purchaser thereof shall be responsible to see that grass is kept mown; trash and/or garbage is kept in covered containers emptied at reasonable intervals; and the lot kept free of weeds, trash, litter, refuse, garbage and any unsightly growth. No billboard, advertising sign or device, or other unsightly object shall be erected, placed or suffered to remain on any lot, nor shall any premises be used in any manner which would disturb the quiet or endanger the health of the adjoining landowners; provided, that one sign of not more than six square feet used to advertise the property for sale or rent may be posted at any time.

19.00 TREES AND SHRUBS

19.01 No tree with a diameter of two inches or more measured four feet above the grounds, nor any shrub of three feet in height, shall, without approval of the Committee, be cut down, destroyed, moved or disfigured; and all existing trees and shrubs shall be protected during construction and preserved by proper wells and grading, as approved by the Committee.

20.00 NO RESUBDIVISION

20.01 No lot governed hereby shall be subdivided, including parcels on which a cluster declaration has been recorded, except that the owner thereof may convey condominium estates in any multi-family structure pursuant to the provisions of CRS 1963 118-15-1, et seq., as amended.

21.00 CHANGE OF GRADE OR DRAINAGE

21.01 No change in the grade or drainage of any lot shall be made which would affect any adjoining lot without the written consent of the owner or owners of said adjoining lots and the approval of the Committee.

22.00 FENCES

22.01 No fence shall be erected or maintained within 15 feet of any street or road; nor shall any fence exceeding three feet in height be erected or maintained without the approval of the Committee.

23.00 HEATING FACILITIES

23.01 No structure shall be equipped with any heating apparatus which uses any but smoke-free fuel; but any structure may contain not more than one fireplace per residential unit, provided the same is not a primary heat source.

23.02 Bottles, tanks, or other storage containers for fuel must be concealed from view by fencing, an enclosure, or other satisfactory means.

23.03 Each structure must be connected to and supplied from any central fuel system installed or provided; and any fuel tanks or bottles must be removed within 30 days after fuel from a central system is available.

24.00 COMMERCIAL PROPERTY

24.01 Those lots so marked on the recorded plats affected hereby are designated as commercial property. All of the structures erected on any of said lots or blocks shall be for trade or commercial purposes; and the setback requirements contained elsewhere herein shall not be applicable to said lots and blocks.

24.02 Signs of a nature to adequately disclose the proprietor's business shall be attached to the structure on any of said lots, providing such signs are of a common type approved by the Committee. No flashing, moving, animated or neon signs will be permitted; nor any sign which extends above the roof line or the structure upon which erected. No sign shall exceed 50 square feet; but nothing shall prevent dignified window lettering.

24.03 No structure on a commercial lot shall exceed two stories in height, exclusive of chimneys.

24.04 Off-street parking shall be provided by each lot owner, either alone or in concert with other commercial property owners.

25.00 ENFORCEMENT AND AMENDMENT

25.01 The provisions hereof shall run with and bind the land and shall be enforceable by the Company, and the Committee or any owner of land affected hereby.

25.02 If any person in possession of any lots bound hereby violates or attempts to violate any of these covenants, it shall be lawful for any other person owning land governed hereby to prosecute such proceedings in the appropriate Court to prevent violation and to enforce the provisions hereof.

25.03 The failure of any person to enforce any of these restrictions shall not be deemed a waiver of breach hereof by any other person, nor of any prior or subsequent breach.

25.04 Any of the covenants, restrictions, charges and duties herein contained may be altered, repealed, amended or changed by vote of a majority of the owners of land bound hereby, Any such change shall be evidenced by the recording of an appropriate instrument in writing executed by a majority of the then owners of lots affected.

26.00 SEVERABILITY

26.01 If any provision hereof be held invalid, or the application of any provision to any person, firm or corporation or any circumstance be unenforceable, such provision shall be severable; and the remainder hereof remain in full force and effect as though the invalid portion had not been included herein.

IN WITNESS WHEREOF, the Crested Butte Land Company has caused these presents to be signed by Roger Cisneros, its President, and its corporate seal attached hereto, attested by Nancy J. Morrison, its Secretary.

CRESTED BUTTE LAND COMPAWY

By /s/ Roger Cisneros
President

ATTEST:

/s/ Nancy J. Morrison
Secretary

CRESTED BUTTE
LAND COMPANY

-SEAL-

COLORADO

STATE OF COLORADO)
City and County of Denver) ss.

BE IT REMEMBERED that on this 20th day of August 1970, personally appeared before me, a Notary Public of the State of Colorado, Mr. Roger Cisneros, President of the Crested Butte Land Company, and Miss Nancy J. Morrison, Secretary of said Company, and acknowledged the foregoing Indenture as the act and deed of the said Company; and in my presence affixed the seal of said Company and their signatures hereto; and acknowledged their said signatures.

(SEAL)

My commission expires: 3-24-73

/s/ R. M. Huckeby
Notary Public

Crested Butte South Commercial Area Master Plan

FINAL DRAFT
February 2019

TABLE OF CONTENTS

SECTION 1. PURPOSES 1

1.1 Crested Butte South ("Crested Butte South Special Area") 1

1.2 Purpose 1

SECTION 2. **APPLICABILITY** 2

SECTION 3. RELATIONSHIP TO GUNNISON COUNTY REGULATIONS 3

3.1 Uses Generally Exempt from Land Use Resolution 3

3.2 Definitions 3

3.3 Construction and Word Usage 3

3.4 Interpretations 3

SECTION 4. DEFINITIONS 4

SECTION 5. PERMITTED AND PROHIBITED LAND USES 10

5.1 Introductory Provisions 10

5.2 Permitted Uses 10

5.3 Prohibited Uses 13

5.4 Temporary Uses and Structures 14

5.5 Special Events 14

5.6 Non-Conforming Uses 14

SECTION 6. DEVELOPMENT REVIEW PROCESS & PERMITS 15

6.1 Permits and Payment of Fees and Taxes Required Before Improvements 15

6.2 Design Review Committee 15

6.3 CB South Special Area Permit 15

6.4 Variance Applications 20

6.5 Gunnison County Land Use Change Permit and Building Permit 21

SECTION 7. GENERAL STANDARDS FOR ALL DEVELOPMENT 22

7.1 Building Code 22

7.2 Geological Hazard Study 22

7.3 Noise and Construction Hours 22

7.4 Odors 22

7.5 View Obstructions to Motorists 22

7.6 Site Maintenance 23

7.7 Stormwater Management 23

7.8 Wireless Telecommunication Devices and Structures 23

7.9 Mechanical Systems 24

7.10 Solid Fuel-Burning Devices 24

7.11 Energy Conservation must comply with IECC 24

7.12 Utility Connections 24

7.13 Water Quality and Wetland Areas 25

7.14 Wildfire Hazards 25

7.15 Wildlife Habitat Areas 25

7.16 Ridgelines 25

7.17 Snowplowed Access 25

7.18 Onsite Wastewater Treatment Systems (OWTS) 25

SECTION 8. CB SOUTH VILLAGE CENTER DESIGN STANDARDS 26

8.1 CB South Village Center Vision and Goals 26

8.2 General Design Principles 27

8.3 Single-Family Dwellings are a permitted use in the CB Center Perimeter. 28

8.4 CB South Village Center Design Theme 28

8.5 General Conformance with the CB South Village Center Strategic Plan 28

8.6 Required Land Uses 28

8.7 DRC Specific Approval 29

8.8 Dimensional Standards 29

8.9 Minimum Setbacks 29

8.10 Building Height 32

8.11 Building Design 34

8.12 Landscaping 39

8.13 Parking Regulations 42

8.14 Exterior Lighting Design. 45

8.15 Street Design. 45

8.16 Sidewalks 46

8.17 Driveway and Parking Area Design 47

8.18 Storage, Loading and Service Areas in the CB South Village Center 47

8.19 Snow Storage and Snow Staging in CB South Village Center 48

8.20 Metro and Fire District Approval of Proposed Building and Structure Locations 49

8.21 Mailbox Design and Location 49

8.22 CB South Village Center Signs 49

8.23 Pioneer Plaza and Remainder of Block 8 Requirements 49

SECTION 9. RESIDENTIAL DESIGN STANDARDS 50

9.1 Residential Design 50

9.2 Driveway Grades 50

9.3 CB South Special Area 50

9.4 Residential Lots 50

9.5 Metro and Fire District Approval of Proposed Building and Structure Locations 50

9.6 Variance Requests 50

SECTION 10. BEGINNING AND COMPLETING CONSTRUCTION 51

SECTION 11. AMENDMENT AND TERMINATION 52

11.1 Term 52

SECTION 12. MISCELLANEOUS PROVISIONS 53

12.1 No Liability 53

12.2 All Owners Bound 53

12.3 Destruction of Improvements 53

12.4 Severability 53

12.5 No Precedent Set by This Designation 53

SECTION 13. VIOLATIONS AND ENFORCEMENT 54

13.1 Power 54

This Page is Intentionally Left Blank

SECTION 1. PURPOSES

1.1 Crested Butte South ("Crested Butte South Special Area")

The Crested Butte South Special Area ("**Crested Butte South Special Area**" or "**CB South Special Area**") has been designated by the Board of County Commissioners of Gunnison County ("**BOCC"**) pursuant to Section 1-110: Process for Designating Special Areas of the *Gunnison County Land Use Resolution* ("**LUR**"), Resolution 2008-38 as a Special Area. The terms and conditions of Resolution 2008-38, as they may be amended from time to time, shall control at all times.

1.2 Purpose

These purposes set forth in this Commercial Area Master Plan (CAMP) serve as basic goals for the development of the CB South Special Area and the review standards and process thereof. When there is a conflict between a statement of purpose and an adopted standard within the CAMP, or when an adopted standard is more specific, the standard shall supersede the purposes. The CAMP shall be liberally construed to further the following purposes:

A. To Simplify LUR Review and Approval

To simplify the LUR review and approval process for real property wholly contained in the Crested Butte South Special Area.

B. To Promote a Compact Commercial and Business Development Pattern

To promote a compact mixed-use development pattern wholly contained in the Crested Butte South Special Area.

C. To Protect the Environment; Public Health, Safety and Welfare; Public Services, Facilities and Property

To avoid or mitigate potential impacts caused by land development within the CB South Special Area, to the environment, to public services and facilities, property and public safety and welfare, and land use within the CB South Special Area and adjacent properties, to the maximum extent feasible.

D. To Provide Opportunity for New and Existing Businesses

To provide the opportunity for existing businesses to grow and new businesses to operate in close proximity to existing populations, services, utilities and transportation routes.

E. To Encourage Economic Diversity

To encourage, strengthen and promote greater economic diversity in the Crested Butte South Special Area.

SECTION 2. APPLICABILITY

The CAMP applies to all development, including development of new buildings or structures, expansion of existing uses, and change of the use of land or structures within the CB South Special Area, including any and all commercial uses. The CB South Special Area encompasses the First through the Fourth Filings of the Crested Butte South Subdivision, recorded as follows:

- Crested Butte South – First Filing, August 21, 1970, Reception Number 280978
- Crested Butte South – Second Filing, September 24, 1970, Reception Number 281588
- Crested Butte South –Second Filing, Replat of Lots 1-3, and 10-15 all in Block 9, February 21, 1995, Reception Number 458318
- Crested Butte South – Second Filing, Corrected Plat, Lot 15, Block 11, June 18, 2002, Reception Number 521255
- Crested Butte South – Third Filing, January 4, 1971, Reception Number 282791
- Crested Butte South – Fourth Filing, December 1, 1971, Reception Number 291415
- Crested Butte South – Fourth Filing, Replat of Lots 4-6, Block 26, May 3, 2005, Reception Number 553180; all in the records of the Clerk and Recorder of Gunnison County, Colorado.

This CAMP in addition to the Crested Butte South Covenants and Restrictions, Amendments and Resolutions (collectively Covenants and Restrictions), and adopted Rules and Regulations, and Guidelines currently in use by the CB South Property Owners Association ("**P.O.A.**"), each may be amended from time to time. In the event of any conflict between the Regulations and the Covenants and Restrictions, Amendments and Resolutions, and adopted Rules, Regulations, and Guidelines in use by the CB South P.O.A., the more restrictive shall apply. Further, any reference to specific sections of the LUR is a reference to the current LUR, as it may be amended from time to time.

SECTION 3. RELATIONSHIP TO GUNNISON COUNTY

3.1 Uses Generally Exempt from Land Use Resolution

Development within the CB South Special Area shall be exempt from requirements of the LUR, unless otherwise specified herein, or by Gunnison County.

3.2 Definitions

Terms not otherwise defined hereunder shall be defined pursuant to the applicable sections of the LUR.

3.3 Construction and Word Usage

Construction and word usage shall be interpreted pursuant to the applicable sections of the LUR.

3.4 Interpretations

The CB South P.O.A. Manager and/or Board of Directors and the BOCC as necessary shall have authority to interpret the CAMP during an appeal process. A written record of any interpretation shall be kept on file at the P.O.A. Offices.

SECTION 4. DEFINITIONS

This Section defines words, terms, and phrases used specifically in the CAMP. Terms not otherwise defined herein shall be defined pursuant to the Definitions section of the *Gunnison County Land Use Resolution*.

ADA refers to Americans with Disabilities Act of 1990 that sets forth requirements of accessibility to public and semi-public buildings, among other things, as may be amended from time to time.

BOCC means the Board of County Commissioners of the County of Gunnison, Colorado.

BASEMENT means the floor of a building partly or entirely below ground level.

BUILDING CODE means the effective building codes as adopted by Gunnison County.

CAMP means this Commercial Area Master Plan created to regulate the development and use of the Crested Butte South Special Area in conjunction with the designation of CB South as a Special Area pursuant to applicable Sections of the *Gunnison County Land Use Resolution*.

CERTIFICATE OF APPROVAL is a certificate issued by the Gunnison County Planning Department that states that the proposed project has received compliance review by both the Crested Butte South P.O.A.'s DRC and the Gunnison County Planning Department and the applicant is authorized to apply for the applicable building permit through the Gunnison County Building Department.

CERTIFICATE OF OCCUPANCY means a certificate issued by Gunnison County that provides proof that the building or structure has been constructed in conformance with the approved building permit plans and all applicable building codes.

COMMERCIAL means any establishment engaged in the retail, offices and incidental wholesale, of goods or services open to the general public or members only. "Commercial" also means "business."

COVENANTS AND RESTRICTIONS means the Crested Butte South Covenants and Restrictions, Amendments and Resolutions recorded in the official records of Gunnison County, Colorado in Book 420 at page 404, as the same may be amended and/or restated from time to time.

CB SOUTH PLATS means the recorded plats for the First, Second, Third and Fourth Filings, Crested Butte South, Gunnison County Colorado.

CB SOUTH VILLAGE CENTER encompasses all of Block 6, Lots 5, 7, 9, 11, 13, 15, 17, 41 to 48 inclusive in Block 4; Lots 23 to 40 in Block 5, excluding Lots 32, 33, and 34, all within the Second Filing. Lots 32-34 in Block 5 may be included in the CB South Village Center at the discretion of the P.O.A. Board only after notification of all immediately adjacent property owners, and at least one properly noticed public hearing.

CB SOUTH VILLAGE CENTER STRATEGIC PLAN refers to the illustrative strategic plan within the CB South Village Center Area as shown in Figure 8-1.

CB SOUTH METRO DISTRICT means the Crested Butte South Metropolitan District which provides water and sewer services to Crested Butte South, snowplowing and roadway maintenance services under contract with Gunnison County.

CB SOUTH SPECIAL AREA a.k.a. Crested Butte South Special Area, shall mean all of the real property now or hereafter included in the Crested Butte South Subdivision, Filings 1-4, and subsequent Filings, made subject to the CAMP as more specifically described in Section 2.

CB SOUTH SPECIAL AREA PERMIT means the required permits issued by the P.O.A. in accordance with the requirements herein.

DESIGN REVIEW COMMITTEE (DRC) means the five (5) member Committee (with up to two alternates) established to review and act on plans for improvements on any lot to ensure compliance with the CAMP. The DRC is the Improvement Committee described in Sections 1.01-4 and 2.00 of the Covenants and Restrictions. The DRC shall be comprised of at least one (1) and no more than two (2) CB South Village Center lot owners, at least two (2) residential-use-only lot owners, and no more than one P.O.A. Board member, all of whom are appointed by the P.O.A. Board, with each member entitled to one vote on matters coming before the DRC. A quorum of the DRC shall be three (3) members in order to hold a meeting and conduct business. Decisions rendered at meetings where only three (3) members are present must be unanimous. Each member shall serve a two-year term, and terms shall be staggered.

DEVELOPMENT means any of the following activities (a) the construction, reconstruction, demolition, conversion, structural alteration, relocation or enlargement of any buildings or structures; (b) any use or change in use of any buildings, land or water; (c) any extension of any use of land; (d) any clearing, grading or other movement of land; (e) any dredging, filling, grading, paving, excavation or drilling operations; (f) any alteration; (g) any improvement; (h) any redevelopment; (i) any landscaping or (j) the storage, deposition or excavation of materials.

DWELLING UNIT means a building or a portion of a building containing a single unit providing living facilities for one (1) or more persons, including permanent provisions for living, sleeping, a kitchen as limited herein, and sanitation. Dwelling units are further classified as:

> **Accessory Dwelling Unit:** A single-family dwelling located on the same lot as the primary single-family dwelling that meets the requirements for an accessory dwelling unit contained in Section 3. Each dwelling unit may have one (1) kitchen without size limitation. Wet bars are also allowed in common living rooms, entertainment rooms and similar common areas that cannot be locked-off from the dwelling unit.
> **Multi-Family Dwelling Unit:** A building containing three (3) or more dwelling units on one (1) lot. Multi-family dwelling units include apartment units, condominium units and lodge units that may also be built with hotel units, hotel efficiency units and efficiency lodge units (please refer to the zoning designation definition that contains specific allowances and limitations for each type of multi-family dwelling unit that may limit kitchen and room configuration limitations for these unit types). When a kitchen size is not limited by a dwelling unit zoning designation definition, each dwelling unit may have one (1) kitchen without size limitation.

Duplex Dwelling Unit: A lot containing a building containing only two (2) dwelling units located on one (1) platted lot. Each dwelling unit may have one (1) kitchen without size limitation. Wet bars are also allowed in common living rooms, entertainment rooms and similar common areas that cannot be locked-off from the dwelling unit. A mother-in-law suite is permitted.

Single-Family Dwelling Unit: A building containing only one (1) dwelling unit located on one (1) lot. Each dwelling unit may have one (1) kitchen without size limitation. Wet bars are also allowed in common living rooms, entertainment rooms and similar common areas that cannot be locked-off from the dwelling unit. A mother-in-law suite is permitted.

EXISTING GRADE means the original or natural topographic grade of a lot/property prior to any disturbance or grading work having been conducted. Existing grade shall be based on the USGS elevation provided on a wet-stamped survey of a property, by an engineer licensed in the State of Colorado, and completed prior to the date of the application. In the case of non-natural or highly irregular topography due to man-made impacts within the existing site development area, not created by the applicant, an average slope may be used (see below). On any lot/property exhibiting evidence of cut or fill grade not authorized by the P.O.A., the applicant may be required to provide a professional soils analysis to determine the natural grade. No excessive fill, excavation or other artificial methods of grade manipulation will be permitted to create an exaggerated building site to manipulate the building height measurement (see diagram below).

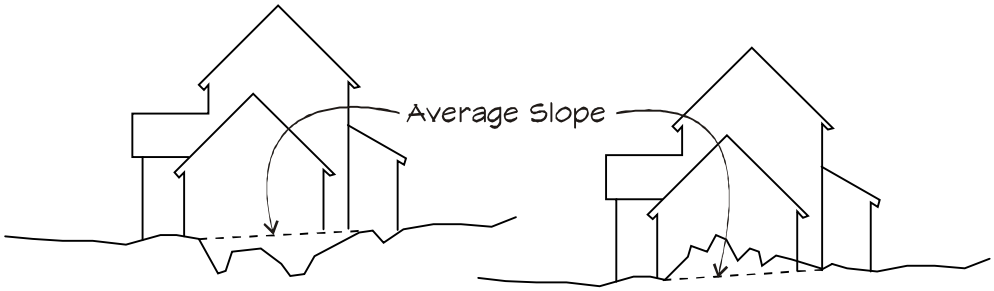

In the case of non-natural or highly irregular topography due to man-made impacts within the existing site development area, an average slope may be used.

FIRE CODE means the current effective fire code that has been adopted by Gunnison County and/or the Crested Butte Fire Protection District.

FLOOR AREA means the sum of all area(s) within the exterior walls of a building or portion thereof, measured from the exterior faces of the exterior walls, excluding the area within attached or detached garages, attics or crawl spaces provided that such areas meet the following floor area exclusions:

Attic Areas: Attic areas shall have with a ceiling height of five feet (5') or less as measured from the topside of the structural members of the floor to the underside of the structural members of the roof directly above.

Attic Areas with Trusses: Attic areas created by construction of a roof with structural truss type members provided the trusses are spaced no greater than inches (30") apart.

Attic Areas with Non-Truss System: Attic areas created by construction of a roof structure utilizing a non-truss system with spaces greater than five feet (5') in height if all of the following criteria are met:
The area cannot be accessed directly from a habitable area within the same building level; and
The area shall have only the minimum access required by the Building Codes from the level below; and
The attic space shall not have a structural floor capable of supporting a "live load" greater than forty (40) pounds per square foot, and the "floor" of the attic space shall not be improved with decking.

Crawl Spaces: Crawl spaces accessible through an opening not greater than twelve square feet (12') in area with five feet (5') or less of ceiling height as measured from the surface of the earth to the underside of structural floor members of the floor/ceiling assembly above. Crawl spaces created by a "stepped foundation," hazard mitigation or other similar engineering requirement with a total height in excess of five feet (5') may be excluded from floor area calculations at the discretion of the Gunnison County Planning Department.
Stairways: Stairs within a dwelling unit shall only be counted on every other level.

HEIGHT means the heights set forth in Section 8, Building Height section.

HOME OCCUPATION means a business, occupation or trade conducted wholly within a dwelling, or wholly within a structure accessory to the dwelling. Such home occupation shall be incidental and secondary to the use of the property for residential purposes and shall not change the residential character of the property, and shall employ on-site no more than one (1) outside, non-family member, who lives off-premises. All home occupations are governed by separate Crested Butte South Property Owners Association Regulations on the same.

IMPROVEMENT OR IMPROVEMENTS means an addition to or enhancement of property or its condition, amounting to more than mere repairs or replacement, including, but not limited to, structures, infrastructure, habitat compensation, restoration, reclamation, general landscaping, and such other installations as may be designated by the Gunnison County.

INCIDENTAL OR ACCESSORY means affiliated with or dependent on the principal use.

INDUSTRIAL means land uses that relate to, concern or arise from the assembling, fabrication, finishing, manufacturing, packaging, or processing of goods.

LAND USE RESOLUTION (LUR) means the Gunnison County Land Use Resolution, adopted by the Board of County Commissioners of Gunnison County, Colorado on January 8, 2001 (the “effective date” of the *Resolution*), and as amended from time to time.

MANUFACTURING USES means any land use where raw materials are brought to the site and created into a finished product through a process, typically using large quantities of materials and industrial machines.

MAXIMUM EXTENT FEASIBLE means that all practical efforts to comply with the CAMP or minimize potential harm or adverse impacts have been undertaken and that no feasible and

prudent alternative exists. Economic factors may be taken into account but shall not be the overriding or dispositive factor in determining whether no feasible and practical alternative exists in a particular situation.

MIXED-USE means development with both residential and commercial land uses.

MULTIPLE-FAMILY OR MULTI-FAMILY BUILDING means a residential building with a minimum of three (3) units.

NUISANCE means an activity that arises from the unreasonable, unwarranted or unlawful use of property, working obstruction or injury on the right of another including a property right, or on the general public.

PERIMETER LOT means a Village Center Perimeter Lot as defined herein.

PIONEER PLAZA OR TOWNHOME MAP PIONEER PLAZA COMMERCIAL TOWNHOMES means the property subject to the Townhome Map Pioneer Plaza Commercial Townhomes as recorded in Gunnison County records at Reception Number 555752.

PLANNING DEPARTMENT means the Gunnison County Planning Department.

P.O.A. means the Crested Butte South Property Owners Association which is comprised of all owners of property in the Crested Butte South Subdivision governed by a duly elected Board of Directors.

P.O.A. BOARD means the Crested Butte South Property Owners Association Board of Directors elected by the owners in good standing to represent the property owners in Crested Butte South.

P.O.A. MANAGER means the agent or administrator of the Crested Butte South Property Owners Association who is hired by and reports to the P.O.A. Board.

RECORDED OR RECORDATION means, with respect to any document, the recording of said document in the records of the Office of the Gunnison County Clerk and Recorder, Gunnison County, Colorado.

RECYCLING AREA means an enclosed common facility where the recycling of products such as cans, glass, plastic, newspaper, and other similar items can be deposited for pick up by a recycling company. A recycling area must be part of a common trash enclosure as provided for in the CB South Village Center Area.

REMAINDER OF BLOCK 6 means the land area in Block 6 as platted on the Crested Butte South Second Filing as recorded in Gunnison County records at Reception Number 281588 and which remains after the Townhome Map Pioneer Plaza Commercial Townhomes was recorded and excludes Pioneer Plaza Commercial Townhomes.

SIGN means any attention-getting device used to promote business activity, any placard, poster, billboard, advertising structure or inscribed surface, pattern or artificial lighting, pictorial or symbolic ornament, emblematic structure, banner, fluttering apparatus, or other visually

communicative or expressive device that is visible from an outdoors position and is used to advertise or call the public's attention to any public, business, commercial, recreational or any other activity, object for sale or lease, person or place, or to bear any kind of message. A sign includes any surface on which a name, text, device, signal, ornament, logotype, or advertising matter is made visible, but does not include a vehicle on which the name of a business appears. The meaning of "sign" shall also include any sign currently in disuse, but still visible from an outdoors position, and any frame or support structure erected specifically to support a sign.

SIGNIFICANT TREES means those trees with a caliper of 3” or more (measured 4’ above the root ball) for which an applicant is seeking credit as part of residential, Commercial or Mixed Use development design review.

SITE DEVELOPMENT PLAN means a scaled drawing depicting the proposed development on a lot or lots within the CB South Special Area.

SOLID FUEL BURNING DEVICE means a device designed for the combustion of solid fuels including, but not limited to, wood, coal, pulp, paper, pellets or similar non-liquid or non-gaseous materials so that usable heat is derived for the interior of a building, and includes solid-fuel-burning stoves, fireplaces or wood stoves of any nature, combination fuel furnaces or heaters that burn solid fuel, or any other device used for the burning of solid combustible material.

STREET means a dedicated public right-of-way that provides vehicular and pedestrian access to adjacent properties. Street shall include road, lane, place, avenue, drive and similar terms.

VENDING CART means a small vehicle or cart used for the vending of food and goods to the general public. Typically, vending carts are non-motorized and are wheeled to a location outside of a public right-of-way, such as a park or common area.

VILLAGE CENTER CORE refers to all of Block 6 in the Second Filing. The majority of the Village Center Core is expected to be developed with commercial, multi-family and mixed-use buildings.

VILLAGE CENTER PERIMETER LOTS OR PERIMETER LOTS refers to those portions of Blocks 4 and 5 that front Block 6 in the Second Filing, and are commercially-designated, per the CB South Plats; and possibly may include Lots 32-34 in Block 5 of the Second Filing pursuant to Covenants and Restrictions.

SECTION 5. PERMITTED AND PROHIBITED LAND USES

5.1 Introductory Provisions

A. This Section describes the permitted and prohibited uses of lots in the CB South Special Area, and details how the permitted uses are required to be operated.

B. Any use not specified herein or in the Covenants and Restrictions may be considered on a case-by-case basis by the P.O.A. Board.

1. With any P.O.A. Board decision on the requested use, the applicant can seek relief through the appeal process, as set forth in *B.O.C.C Resolution 2008-38*.

C. The P.O.A. Board may require additional mitigation to offset issues, including but not limited to, potential noise, odors, visual, environmental or traffic impacts.

D. Lots 32-34 in Block 5 may, in the future, be included in the CB South Village Center at the discretion of the P.O.A. Board, only after notification of all immediately adjacent property owners, and at least one properly noticed public hearing. Otherwise, in no instance shall platted residential lots located outside of the defined Village Center Core or the Village Center Perimeter Lots be converted to a CB Center Lot.

5.2 Permitted Uses

A. **CB South Village Center.** Lots within the CB South Village Center shall be used only for the following purposes:

1. **Retail Commercial Establishments:** antiques, appliances, art supplies, galleries, retail bakeries, sports shops, clothing stores, shoe stores, jewelry stores, video stores, bookstores, cameras, candies, tobaccos, florists, food markets, furniture, gifts, hardware, hobby shops, photo shops, print shop, sporting goods, stationery and variety stores, liquor store, and pet shop. These uses shall be located on the first level.

2. **Service Commercial Establishments:** business offices and professional offices, financial institutions and personal services establishments, including barber and beauty shops, non-commercial laundromats, shoe repair, sewing and tailoring, daycare center (subject to State of Colorado requirements), animal grooming, studios for instruction in the arts, performing arts, health clubs, radio and television broadcasting, artists' studio, and catering services. These uses shall be located on the first or second level.

3. **Auto-Related Uses:** fueling and washing vehicles which are provided as a service incidental to a retail store, provided the following conditions are met: a minimum lot area shall be 16,000 S.F., and there is not a similar use within 500-feet, and the fuel dispensing units accommodate no more than four vehicles at any given time. These uses shall be located on the first level.

4. **Assembly Halls:** recreational clubs, theatres, assembly halls, schools, churches, public or civic buildings, and P.O.A. or governmental offices. Assembly halls may require additional off-street parking.

5. **Restaurants, Coffee Shops and Bars:** coffee shops, cocktail lounges or other places serving food and/or alcoholic beverages (excluding drive-in eating places that serve customers in their vehicles, which are prohibited).

    a. Restaurants serving alcohol will have limited hours of operation to be determined by the P.O.A. Board.

    b. Outdoor dining is encouraged, but outdoor music, outdoor speakers, live music and/or live advertising will require special review by the P.O.A. Board and shall be subject to the Noise Guidelines adopted thereby, the result of which might be approval or denial thereof.

6. **Medical and Dental Clinics and Professional Offices**. These uses may be located on the first or second level.

7. **Rental, Repair and Wholesaling Facilities.** These uses are allowed only in conjunction with any of the above uses, provided all activity is clearly incidental and accessory to the permitted uses and wholly conducted within the building. No purely warehousing and storage uses shall be permitted. These uses shall be located on the first level.

8. **Accommodations.:** Accommodations includes hotels, motels, and bed and breakfasts (subject to any applicable Sections of the LUR), limited in size to no more than 15,000 S.F., subject to any variance application to the P.O.A. Board.

9. **Public Parks and Plazas.** Public parks and plazas shall meet the following criteria:

    a. The parks and plazas should have south-facing or west orientation;

    b. Food and beverage service is or can be located nearby;

    c. The parks and plazas should have water and/or Public Restrooms located within or near them;

    d. The parks and plazas should be designed as places for activity and events;

    e. The parks and plazas should be connected by developed and undeveloped paths to and from neighborhoods; and

    f. Space for playgrounds is provided, where appropriate.

10. **Farmer's Market.** Any market established by an organization of farmers/producers to provide the opportunity for direct sales (by farmers or their representatives) of primarily Colorado-grown produce, with the possibility of

accessory sales of other agriculturally-related products, to wholesale or retail buyers at stalls or other similar structures of a temporary nature.

11. **Construction-Oriented Specialty Uses:** This type of use includes a paint store, tile/flooring store, locksmith, shop-craft industry, household appliance repair shop, garden shops, fabric and sewing supplies, provided all uses are conducted within the building (except garden shops), and provided a storefront is utilized, maintained and accessible to the general public. These uses shall be located on the first level.

12. **Propane Refilling Station.** This is a use incidental to a primary business use that provides new tanks and the re-filling of propane tanks for residential applications. These uses must be located on the first level and shall be screened from view.

13. **Residential Dwelling Units**.

    a. Village Center Core: multi-family dwelling units and row houses subject to the limitations set forth herein.

    b. Village Center Perimeter Lots: single-family, duplex, row houses and multi-family dwellings are allowed as well as mixed-use buildings.

14. **Home Occupation.:** Home occupations shall be allowed in the CB South Special Area in accordance with the Crested Butte South Home Occupation Regulations.

15. **Wireless Communications Facilitie**s. This use is permitted provided they are installed on buildings, do not exceed the maximum building height, and are designed to blend into the design of the structure, with screening provided where possible.

16. **Outdoor Commercial Vending/Vending Carts**. These types of vending carts shall be permitted in accordance with any P.O.A. adopted vending cart regulations.

B. Residential Lots. Any residential lot within the CB South Special Area shall be used only for the following purposes:

1. Single family and duplex dwelling residential use.

2. Multi-Family dwelling uses, subject to meeting the applicable requirements of the Regulations. Multi-family buildings shall only be herein.

3. Home occupations, subject to the Crested Butte South Home Occupation Regulations.

4. Accessory Apartments that meet the requirements in Section C below and the Residential Design Standards.

C. **Accessory Apartments**. Detached or attached accessory apartment dwelling units shall be allowed in all residential areas, subject to the following:

1. The total Floor Area of the Dwelling Unit area of the unit is no greater in size than one-third (1/3) of the total dwelling area of the single-family unit up to a maximum of 1,000 sq. ft.

2. Legal title to the accessory dwelling unit and the single-family unit is held in the same name during the period of ownership thereof.

3. Parking for the accessory apartment and the primary dwelling units is provided in accordance with the Covenants and Restrictions and the CAMP.

4. The primary single-family dwelling exists or is being concurrently constructed.

5. Provide separate access to the unit, a kitchen facility separate from the main single-family dwelling unit; and

6. If detached, be located on a lot so as to minimize visual impacts to existing buildings on lots immediately adjacent to the proposed unit to the extent practical.

5.3 Prohibited Uses. The following uses and operations are prohibited:

A. Any and all Industrial uses.

B. Manufacturing uses are prohibited except that the following types of light manufacturing uses shall be permitted subject to the development minimizing and mitigating any adverse impacts to the community and there is a primary on-site retail use:

1. Breweries, Vintner and Distillery;

2. Coffee roasting and manufacturing;

3. Food or greenhouse production (excluding marijuana growing or production of marijuana- based goods which are prohibited);

4. Mountain sports equipment or gear manufacturing;

5. The P.O.A. Board may approve other light manufacturing businesses if the P.O.A. Board determines that the proposed light manufacturing business is in compliance with the CAMP, fits within the community and provides mitigation for any adverse impacts.

C. Propane Tanks. Propane tanks that support a building's mechanical system shall not be permitted.

D. Water Wells. Any drilling for water except as permitted by the CB South Metro District.

E. Adult-Oriented Businesses. Adult-oriented businesses shall not be allowed within 1,000 feet of any of the following uses: a residence; a public park or playground; recreational facility; child care center; place of worship or assembly; or a school.

F. The parking or storage of heavy equipment, such as, excavation or earthwork machines, trailers in excess of 24 ft., specifically designed for executing construction tasks, is prohibited on any residential or commercial lots within Crested Butte South, except as may otherwise be permitted for temporary construction projects.

G. Any use not explicitly listed as an allowed use in Section 5.2, or determined by the P.O.A. Board to be similar in character and impact to an allowed use.

5.4 Temporary Uses and Structures

All temporary uses and structures in the CB South Village Center, including temporary greenhouses, shall be reviewed and approved by the P.O.A. Board on a case-by-case basis, and shall be subject to the Covenants and Restrictions.

5.5 Special Events

All special events shall be subject to application process, fees, review, and approval or denial by the P.O.A. Board.

5.6 Non-Conforming Uses

All non-conforming uses shall be subject to the applicable Section(s) of the LUR.

SECTION 6. DEVELOPMENT REVIEW PROCESS & PERMITS

6.1 Permits and Payment of Fees and Taxes Required Before Improvements

No improvements shall be commenced, erected, placed, altered, or maintained on any lot by any owner or occupant until the use has received DRC approval or POA approval, and plans and specifications have been submitted to and approved in writing by the DRC, and, as applicable, a Building Permit is issued by Gunnison County. No development or improvements shall be commenced, erected, placed, or altered, on any lot by any owner or developer until the following have been obtained:

A. **Payment of all Crested Butte South P.O.A. Fees**. All Crested Butte South P.O.A. associated fees and consulting review expenses as set forth on the fee schedule have been paid.

B. **Final Plans Approved by DRC**. Final plans have been submitted to and approved in writing by the DRC.

C. **Payment of all Gunnison County Taxes and Fees**. All real property taxes and other Gunnison County fees have been paid.

D. **CB South Special Area Permit**. A CB South Special Area Permit has been issued by the P.O.A. Manager, pursuant to Section 6.4.

E. **Gunnison County Administrative Land Use Change Permit and Building Permit**. An Administrative Land Use Change Permit and, as applicable, a Building Permit have been issued by Gunnison County, pursuant to Section 6.3 of the Regulations.

6.2 Design Review Committee

As set forth in the above Definitions, the DRC is a five (5) person Committee (with 2 alternates) authorized to review and act on permit applications and plans for improvements within the CB South Special Area to ensure compliance with the CAMP. The DRC shall be composed of, at a minimum, one (1) and no more than two (2) CB South Village Center lot owners, at least two (2) residential lot owners, and no more than one P.O.A. Board member, all of whom are appointed and may be removed for good cause by the P.O.A. Board.

6.3 CB South Special Area Permit

A CB South Special Area Permit is required before any development or improvements can be made to a lot. The CB South Special Area Permit indicates that a development project is in compliance with these Regulations. CB South Special Area Application shall be processed as follows:

A. **Permit Application**. The applicant shall submit the plans, information and studies as set forth in the P.O.A. approved CB South Special Area Application.

B. **Review Process**. The following review process shall apply to all CB South Special Area Permits:

1. **Submittal of Application**. The applicant shall submit to the P.O.A. a complete

application as set forth on the CB South Special Area Application.

2. **Determination of Completeness**. The P.O.A. Manager shall determine whether the application is complete and includes all information required by the CAMP. It is the goal, but not the requirement of the CAMP that this review be completed within 14 days of the submittal of the application.

   a. **Application is Not Complete**. If the application is not complete, the P.O.A. Manager shall inform the applicant of the specific deficiencies in writing by mail, fax, or e-mail and shall take no further action on the application until the deficiencies are remedied.

   b. **Failure to Correct Constitutes Withdrawal.** If the applicant fails to correct the deficiencies within sixty (60) days of the date of the notification that the application was incomplete, the application shall be considered withdrawn.

3. **Application is Complete.** The P.O.A. Manager shall certify when an application is determined to be complete. A determination that an application is complete shall not constitute a determination that it complies with the applicable standards of the CAMP.

4. **Request for Review by DRC**. The P.O.A. Manager shall refer the complete application to the DRC, which shall complete its review as provided for herein.

5. **Request for Review by Other Agencies or Departments**. At the same time the application is being referred to the DRC, the P.O.A. Manager may request the professional analysis and recommendations of any other review agency, organization, or technical consultant deemed appropriate and necessary to complete the review, including Gunnison County offices and departments, State of Colorado, or federal agencies having an interest in or authority over all or part of the proposal, utility companies, the applicable school district and special service districts serving the proposed development, and engineers, designers, planners, and legal consultants. In all cases where water and sewer service are required, or when landscaping, sidewalks, and lighting will be proposed within the public right-of-way, then review and approval by the CB South Metro District will be required prior to the DRC's design review. In addition, all development shall be reviewed and approval by the Crested Butte Fire Protection District for compliance with the adopted Fire Code. Any fees associated with these additional reviews must be paid by the applicant prior to the issuance of a certificate of approval.

   a. **Review and Comment by Review Agencies**. The review agencies sent a copy of the application shall be requested to make comments within 14 days of mailing by the P.O.A. Manager, unless an extension of not more than 14 days has been requested by the agency before the 14th. The P.O.A. Manager may grant such a reasonable extension if he/she determines that good cause for the delay has been shown. The failure of

any agency to respond within 21 days or within the period of extension shall be deemed no objection of the application by the agency.

b. **Review of Agency / Department Comments by Applicant**. The applicant shall have the right to review the comments and recommendations received from the review agencies. The applicant may submit additional information and make changes in the development proposal to respond to the comments of the review agencies; provided, however, that if those changes are substantial or if they significantly alter the nature, character or extent of the application, the DRC may, after the changes, refer the application again to some or all review agencies to obtain additional comments, and may reasonably extend the period of their review accordingly. In addition, the DRC may require a new application fee if the changes are substantial to cover the costs of re-processing the project.

6. **Notice to Public of Proposed Design Review**. At least fourteen (14) days prior to a design review, notice shall be given to the public that a design review for a Special Area Permit has been scheduled by posting of the property (commercial and residential) on the website and by notice within the official newspaper of the Town of Crested Butte, Colorado, identifying a 14-day public comment period, during which comments may be submitted in writing to the DRC.

7. **Notice to Public of Variance Requests or Proposed Multi-Family Residences of Three or More Units**. Any variance request or change in use from a vacant lot, single-family, or duplex residential use to multi-family residential use of three (3) or more units requires a public hearing before the P.O.A. Board. Notice shall be given to the public by posting on the subject property; by certified letter sent to all immediately adjacent property owners, including those property owners located immediately across a street; and by notice within a legal newspaper of general circulation serving the subdivision, on the website, identifying a 14-day public comment period, during which comments may be submitted in writing to the P.O.A. Approval from the P.O.A. Board must be received prior to any DRC review of the project.

8. **Action by the DRC and P.O.A. Manager**. Within 14 days of having received comments from review agencies, and, as applicable, the applicant has reasonably responded to those comments, the P.O.A. Manager shall schedule a DRC meeting to review the project. Upon completion of its review, the DRC shall approve, approve with conditions, or deny the application, based upon the compliance of the application with the applicable standards and requirements of the CAMP, setting forth in writing the reasons for its decision. Conditions of approval shall include, but not be limited to, the applicant(s) obtaining and complying with all applicable federal, State of Colorado, Gunnison County and other permits required for the project.

a. DRC approval is valid for only twelve (12) months.

b. An extension of the DRC approval for up to an additional twelve (12) months shall require a written request to the P.O.A. Manager a minimum of thirty (30) days prior to the expiration of the DRC approval. The P.O.A. Manager shall determine whether the project will be subject to a new review by the DRC. Consideration for extensions will include, but not be limited to, whether the CB South architectural guidelines have changed since the original date of plan approval.

c. Any extension request shall be accompanied by a new design review fee as determined by the P.O.A. Board which is not refundable.

9. **Recordation of Certificate of Approval & Proof of Building Permit Issuance**. Application can be made to the Gunnison County Planning Department for a Land Use Change Permit and building permit as soon as the CB South Permit is approved.

a. Within five (5) business days of issuance of a building permit by Gunnison County, the applicant shall provide a copy of said building permit to the P.O.A. as notice that construction may begin. Any recordation fees shall be paid by the applicant.

10. **Appeal.** A decision by the P.O.A. Manager or DRC on a CB South Special Area Permit application may be appealed by referral to the P.O.A. Board.

a. **Written Appeal**. An appeal by the applicant or any CB South property owner may be submitted to the P.O.A. Manager no more than fourteen days (14) after the date which the decision-making body issues its final decision on the application; that time for submittal shall not include the day on which the decision was made. The complete appeal shall be submitted in writing, stating the basis for the appeal and the relief that is requested, and shall include materials to support the appeal. The appeal shall become part of the record.

b. **Board Consideration of Appeal**. The appeal shall be considered by the P.O.A. Board at a regularly scheduled meeting within 30 days after the date the written appeal was filed. In the event that a P.O.A. Board member acted as a DRC member during the review of the project subject to the appeal, then said P.O.A. Board member shall recuse him or herself from the P.O.A. Board during the appeal meeting and deliberations.

c. **Notice of Meeting**. The P.O.A. shall, by notice within a legal newspaper of general circulation serving the subdivision, and by first-class mail, inform the applicant, the appellant, and, if a public hearing was part of the original review process on the application for which an appeal of action has been filed, anyone who testified at the public hearing or submitted written comments on the application. The notice shall include the date, time, and place of the public meeting.

d. **Board Decision**. The P.O.A. Board shall affirm, affirm with modifications, or reverse the original action in writing, setting forth its reason for the decision.

11. **Modification or Reversal of Original Action.** The original action shall only be modified or reversed if the appellant establishes, by a preponderance of the evidence based on the record of the review body, that:

    a. **No Credible Evidence**. There is no credible evidence in the record to support the original decision; and/or

    b. **Original Action Inconsistent with CAMP**. The original action was inconsistent with the applicable requirements of the CAMP, Covenants and Restrictions or other regulating documentation for Crested Butte South; or

    c. **Review Body Action Inappropriate**. The review body exceeded its jurisdiction or abused its discretion.

12. **Board Decision Shall be Final.** However, the P.O.A. Board's decision may be appealed to the Gunnison County Planning Department.

13. **Occupancy.** In no instance shall occupancy be allowed in CB South prior to the final/official issuance of the Certificate of Occupancy by the Gunnison County Building Department.

C. Standards for Approval. The DRC shall approve an application for a CB South Special Area Permit if it finds the application complies with the following criteria:

1. **Compliance with the CAMP**. The use shall comply with all applicable standards and provisions of the CAMP, Covenants and Restrictions, and other governing documents of Crested Butte South.

2. **Compatibility with Community Character**. The proposed land use shall be both architecturally and functionally compatible with, or an enhancement of, the character of existing land uses in the CB South Special Area, and it shall avoid excessive similarity and dissimilarity with existing structures, and it shall not cause undue noise, dust, fumes, odor, explosion, or other hazards or nuisances, whether the result of design, location, basic character, or of planned or reasonably expected growth.

3. **No Significant Net Adverse Impacts Offsite**. The proposed land use shall not create significant net adverse impacts including but not limited to: changes to existing water quality, air quality in the impact area, soils and geologic conditions within the impact area, existing land uses, public services and facilities, and government expenditures, public roads and their uses, including hours during which vehicles related to the project will be operating, impacts on adjoining or other affected lands in the subject area, visual impacts, and the amount of surface acreage disturbed and its location.

4. **Compliance with Any Previous Approvals.** The development application complies with any previous approved plans and conditions approved for the site still in effect.

D. The DRC shall base its decision, among other factors, upon the compliance with criteria found within the CAMP, Covenants and Restrictions, as well as other CB South governing documents, including but not limited to: compliance with site dimensions, adequacy of structural design, conformity and harmony of external design with neighboring structures, location and use of proposed improvements upon adjacent lots, proper facing of the main elevation with respect to nearby streets, adequacy of screening of mechanical, air conditioning and other rooftop installations, and conformity of the plans and specifications to the purpose and intent of the CAMP.

6.4 Variance Applications

Variances from Section 7: General Standards for All Development, Section 8: CB South Village Center Design Principles and Standards and Section 9: Residential Design Standards all as set forth herein may be issued by the P.O.A. Board subject to the requirements of this section. Variances for lots located in all Crested Butte South Subdivision will be heard by the P.O.A. Board in accordance with the process set forth below and do not require an additional hearing by Gunnison County. Variance requests can be processed concurrently with the Special Area Permit application. Variances may be granted from dimensional standards, but not for any change in land use. Any change in land use must be approved by Gunnison County, as well as the P.O.A. Board. All decisions shall be in writing, and shall be recorded by the P.O.A. in the official records of Gunnison County at the applicant's expense.

A. **Variance Application.** The applicant shall submit the plans, information and studies as set forth in the P.O.A. approved CB South Variance Submittal Form.

B. **Review Process.** A variance application will be processed generally using the steps and provisions set forth under Section 6.3 (as solely determined by the P.O.A Manager), including the submittal of the application, determination of completeness, consultant or agency review and referrals, public notice, action and recordation. There is no appeals process for a variance since the P.O.A. Board is the review authority for granting variances.

C. **Consideration of Variance**. The P.O.A. DRC and Board will hold public hearings. The DRC shall make a recommendation to the P.O.A. Board, and the P.O.A. Board will act on variance applications based on the following findings of fact and will have the final authority to grant variances when all of the following have been met:

1. There are special circumstances or conditions applying to the land, buildings, topography, vegetation or other matters on the subject lot which would substantially restrict the effectiveness of the development in question; provided, however, that such special circumstances or conditions are unique to the particular lot/property for which the applicant desires a variance and do not apply generally to all uses.

2. That such special circumstances were not created by the applicant.

3. That the granting of the variance will be in general harmony with the purposes of the CB South Special Area and the CAMP, and will not be materially detrimental to the persons residing or working in the vicinity, to adjacent properties, to the neighborhood, or to the public welfare in general.

4. The variance applied for does not depart from the provisions of the CAMP or Covenants and Restrictions, any more than is required to accommodate the unique aspect(s) of the lot/property.

D. Granting of Variance. The P.O.A. Board may grant a variance so as to relieve those special circumstances, difficulties or hardship(s) as based on the findings of fact.

6.5 Gunnison County Land Use Change Permit and Building Permit

A development that has obtained a Crested Butte South Special Area Permit in compliance with the CAMP shall be required to secure a Land Use Change Permit and, as applicable, a Building Permit from Gunnison County. Such development shall be classified, reviewed and permitted at no higher impact classification than as an Administrative Review Project That Requires a Land Use Change Permit, pursuant to the applicable sections of the Gunnison County Land Use Resolution, except that no additional Gunnison County noticing requirements are needed.

A. Gunnison County Permit Application not Complete without CB South Special Area Permit. No application for a Gunnison County Land Use Change Permit nor a Building Permit shall be accepted as complete by Gunnison County without an approved Crested Butte South Special Area Permit.

SECTION 7. GENERAL STANDARDS FOR ALL DEVELOPMENT

This Section establishes the general standards required of all development by which applications for CB South Special Area Permits will be reviewed. These standards are intended to implement the Purpose set forth above in Section 1.2. The following requirements shall apply to the CB South Special Area unless a section states that it only applies to the CB South Village Center.

7.1 Building Code

All buildings and structures proposed to be built in the CB South Special Area shall meet all applicable building codes adopted and amended by Gunnison County.

7.2 Geological Hazard Study

A comprehensive geologic hazard study was conducted by Fox & Associates, Inc., on December 5, 1980, entitled "Subsoil and Engineering Geology Investigation, Crested Butte South Subdivision, Filings 1 through 4". Due to landslide and potentially unstable slopes being present within Second, Third and Fourth Filings the report recommended that individual site-specific studies be performed to evaluate the local geology, potential construction, road cuts and provide recommendations to minimize problems. As part of the building permit submittal, Gunnison County may require area assessments on each individual lot/property located within a geological hazard area, as mapped by the Colorado Geological Survey. It shall be the policy of the P.O.A. to inform contractors/builders/residents/owners if their particular lot will likely require such a study in the design review process. That being said, the POA's statement to an owner that his or her lot may require a soils or similar study or test is not to be construed as an opinion of a construction professional. Further, development in areas subject to geologic hazards shall be subject to the applicable requirements of the LUR.

7.3 Noise and Construction Hours

Every use in the CB South Special Area must comply with the *Noise Guidelines for Crested Butte South*.

7.4 Odors

No use shall cause or allow the emission of odors from any single source so as to result in detectable and unreasonable odors, as determined by state statutes. Ventilation and control of odor and fumes may be required by the DRC.

7.5 View Obstructions to Motorists

The DRC shall have the authority, but not the obligation, to remove, relocate or require the removal or relocation of any retaining wall, earthen berm, bank, hedge, shrub, bush, tree or other improvement, natural or artificial, placed or located on any lot if the location of the object will, in the determination of the DRC, obstruct the vision of a motorist upon any of the streets within or providing access to the CB South Special Area. Any such removal or relocation will be done at the Owner's expense.

7.6 Site Maintenance

A. A lot owner, or owner of improvements on a lot, shall maintain that lot or improvements in a clean, safe and orderly condition and in compliance with any P.O.A approvals granted under the CAMP or the prior land use regulations. If the owner fails to perform any acts of maintenance or repair, the owner will be in non-compliance with the CAMP and subject to the enforcement provisions of the P.O.A.

B. Neither the P.O.A. nor any of its designees or employees or agents shall be liable for any incidental or consequential damages for failure to inspect any lot or improvements or portion thereof or to repair or maintain the same.

7.7 Stormwater Management

A. The provisions of this section apply to any commercial, mixed-use, multi-family development, or other use allowed herein; except that this section does not apply to single-family or multi-family development.

B. There shall be no construction of ponds except as may be necessary for use as water detention or retention areas, and all such ponds shall be constructed according to an approved site development plan approved by a licensed engineer in the State of Colorado. All development in areas subject to flood hazards shall be subject to all applicable sections of the LUR. Wherever possible, aesthetically-pleasing wetlands shall be created to improve water quality and to slow water down and filter it before leaving the site. The applicant shall provide the following.

C. In addition to the drainage plan, a drainage study shall be required for projects in excess of 10,000 S.F. of created impervious surface area. Such study, if required, shall be subject to review and approval by Gunnison County Community Development Department.

D. The owner shall provide storm sewers, culverts and other runoff control structures as indicated on the drainage plan or determined necessary by the drainage study. Such structures shall be included in a designated easement, if required by Gunnison County.

E. The drainage system shall be designed and constructed so that only historic runoff, not including historic irrigation, shall be released from the site. Drainage flows in excess of this amount shall be retained, detained or handled in an on-site system. All costs associated with handling runoff generated by a development shall be paid for by the owner of the development.

7.8 Wireless Telecommunication Devices and Structures

Installation of wireless telecommunication devices and structures within the CB South Special Area shall be required to comply with the applicable requirements of the CAMP and LUR and are only allowed in the CB South Village Center or on a CB South P.O.A. or CB South Metro District property. The P.O.A. Board may also approve an overall wireless network using the public rights-of-way utilizing pole antennas that are designed to fit within the community.

7.9 Mechanical Systems

Mechanical systems must be screened from public view. No mechanical systems shall be the prominent feature on any roof line as viewed from public rights of way. Additionally, all mechanical systems and building protrusions shall be painted a dark color or similar color to the surface through which they protrude.

7.10 Solid Fuel-Burning Devices

A. No solid-fuel-burning device shall be installed within any structure or building or on any property unless such device is an approved solid fuel burning device, as certified to meet the E.P.A. Phase II Rated particulate emissions rate standard by the United States Environmental Protection Agency (E.P.A.), Gunnison County standards, or any subsequent standard established by the E.P.A., or is certified to meet those standards by a testing laboratory accredited by the E.P.A., or is approved by the Colorado Air Quality Control Commission.

B. The maximum number of devices allowed shall be as follows:

1. **Single Family Residence**. Any single-family residential structure, including detached condominiums and townhouses not in multiple-family buildings, and manufactured for which a building or manufactured home permit is issued after the effective date of the LUR shall be allowed to install one approved solid-fuel-burning devices per single family residence. An integrated secondary residence does not qualify for devices in addition to those identified above for the primary residence. Further, each half of a duplex does qualify for a single device.

2. **Multi-Family Residences, Hotels, Commercial and Institutional Buildings**. No solid-fuel-burning device shall be allowed in individual units of multiple-family buildings, hotel/motel units, or commercial buildings, except that one approved solid-fuel-burning devices may be installed per building for a common amenity area.

3. **Installation.** Any solid-fuel-burning device shall be installed pursuant to the standards and specifications defined by the manufacturer of that device, or shall meet the clearances specified in the Uniform Mechanical Code or subsequent applicable code adopted by Gunnison County.

7.11 Energy Conservation must comply with IECC

Buildings will have to comply with the Gunnison County adopted International Energy Conservation Code ("**IECC**"). Before beginning any project, property owners are encouraged to talk with local resources on energy efficiency for a better understanding of the latest technologies and potential energy savings and/or tax rebates on energy systems. Passive solar design is encouraged.

7.12 Utility Connections

All utility connections, including all electrical, cable, fiber optic and telephone connections and installation of wires to buildings, shall be placed underground from the nearest available power source. Transformers, electric, gas or other meters of any type, or other utility apparatus, shall be adequately screened, fenced, buffered or protected and all installations shall be subject to

the prior approval of the DRC. Additionally, all meters and pipes near or on a structure, exclusive of the glass areas, shall be painted a dark color or similar color to the surface that they are closest to in order to blend with their surroundings if allowed by the mechanical specifications and utility agencies.

7.13 Water Quality and Wetland Areas

Development in areas identified as wetland areas or areas that may impact quantity, quality or dependability of water resources shall be subject to the applicable sections of the LUR.

7.14 Wildfire Hazards

Development shall be subject to the most current and applicable sections of the LUR. Additionally, owners are encouraged to review their plans with the Crested Butte Fire Protection District before submitting an application to the DRC. All owners should consider the mitigation recommendations for their properties (defensible space) for areas outside of hazard areas as delineated in the "*Colorado State Forest Service's protect your home from wildfire - it's your responsibility*" available at on the Gunnison County website, or other replacement publication(s).

7.15 Wildlife Habitat Areas

Development in areas identified to be sensitive wildlife habitat areas shall be subject to all applicable sections of the LUR.

7.16 Ridgelines

Development on ridgelines shall be subject to the LUR, including the definition of ridgelines.

7.17 Snowplowed Access

Development of land beyond snowplowed access, as defined in the LUR, shall be subject to the LUR.

7.18 Onsite Wastewater Treatment Systems (OWTS)

All residences and commercial structures must be connected to the Crested Butte South Metropolitan District's sewer system. In the event that the CB South Metro District is unable to serve a lot, then that lot owner will be required to obtain an OWTS permit through Gunnison County prior to approval.

SECTION 8. CB SOUTH VILLAGE CENTER DESIGN STANDARDS

This section establishes the CB South Village Center Design Standards ("Center Standards") that are the standards by which applications for CB South Special Area Permits will be reviewed and approved for development within the CB South Village Center. The Center Standards are intended to implement the CAMP Purpose outlined in Section 1.2, the Village Center Vision and Goals and the General Design Principles.

8.1 CB South Village Center Vision and Goals

The CB South Village Center Standards are based on achieving the following Vision and Goals.

Vision for the Future. The CB South Village Center is the community's cultural and social focal point that also provides for economic vitality including desired and needed businesses: a diversity of housing types; a variety of public spaces that encourage social and community interaction; a well-connected intermodal transportation system; and for sustainable design that incorporates the surrounding scenic beauty."

Goals

A. **Architectural Design** (homogeneous vs. creative). The CB South Village Center will provide a western or mountain modern design while allowing for creativity, flexibility and evolution over time.

B. **Community Amenities.** The CB South Village Center will provide a variety of community amenities needed and desired by CB South residents.

C. **Financing.** Projects shall be financed so as to ensure development equitably pays for needed infrastructure while also encouraging the desired land use pattern by supporting available financial incentives for development.

D. **Housing.** The CB South Village Center will provide a variety of housing types for varying income levels found in the greater Crested Butte community.

E. **Infrastructure** (water needs, sewer capacity, access roads, snow storage, internet parking). The development of the CB South Village Center will ensure adequate infrastructure is provided for development in the area.

F. **Land Use** (live/work, types of uses, percent mix). The CB South Village Center will provide for a variety of land uses with the amount of commercial area in balance with the current and future population of the greater Crested Butte community.

G. **Sustainability.** Development within the CB South Village Center should provide for economic vitality, green building in line with Gunnison County-adopted building and energy regulations, a diversity of housing, and other needed community services where possible.

H. **Transportation** (bus, pedestrian, bicycle, etc.). The CB South Village Center will provide a well-connected intermodal transportation system that is connected to the Gunnison

Valley transit systems.

8.2 General Design Principles

The General Design Principles that shall apply to all development (commercial, residential, and mixed-use) in the CB South Village Center are as follows:

A. The CB South Village Center shall have a center focus and be integrated with housing, shops, work places, offices, schools, parks, plazas, and other civic facilities essential to the daily life of the CB South residents.

B. The CB South Village Center shall be designed so that housing, jobs, daily needs and other activities are within easy walking distance of each other.

C. The CB South Village Center shall connect with the larger regional transit network, with transit stops located as close as possible to activity centers and commuter parking locations.

D. The CB South Village Center shall contain a diversity of housing types to enable people from a wide range of economic levels and age groups to live within its boundaries.

E. The CB South Village Center shall provide a variety of businesses that can provide a range of job types for CB South residents, minimizing the need to import workers with specialized skills.

F. The CB South Village Center shall contain open space in the form of squares, plazas, greens and parks whose frequent use and social interaction is encouraged through placement and professional design.

G. Streets, pedestrian paths/sidewalks and bike paths shall contribute to a system of fully-connected, safe, and interesting routes to and through the CB South Village Center.

H. Streets shall be narrow and spatially defined by buildings, trees and lighting to discourage high speed traffic.

I. The CB South Village Center shall provide the efficient use of water through the use of natural drainage, drought tolerant landscaping and other water saving/conservation methods.

J. The street orientation, the placement of buildings and the use of shading shall contribute to the energy efficiency of the CB South Village Center. Materials and methods of construction shall be specific to the Crested Butte area, exhibiting a continuity of history and culture and compatibility with the climate to encourage the development of local character and mountain community identity. The CB South Center shall promote a compact commercial, mixed-use and multiple-family development pattern that discourages sprawl, in which denser and more intense forms of commercial, mixed use and multiple-family residential development will only occur contiguous to, or in close proximity to, or within the CB South Village Center. Multi-Family residential development is encouraged to develop in proximity to and within the CB South Village Center and is allowed in the First and Second Filings only.

8.3 Single-Family Dwellings in the Village Center Perimeter Lots.

A. All Single-Family Dwelling owners in the Village Center Perimeter Lots are aware they have built or will be building in an area envisioned for commercial, mixed-use and multiple-family dwellings, with activity, noise, parking areas, smells, traffic, large building massing and similar impacts.

B. New single-family homes, remodeling and additions shall be evaluated pursuant to the Crested Butte South Residential Design Guidelines.

8.4 CB South Village Center Design Theme

A. Architecture will establish a strong image and sense of place for the community.

B. All new buildings or complete remodeling of existing buildings shall have an authentic western or mountain modern design while allowing for creativity, flexibility and evolution over time.

C. Architecture and landscaping will present a western or mountain modern design and reflect building forms common to high alpine regions while fitting in with already approved architectural design in the CB South Village Center.

8.5 General Conformance with the CB South Village Center Strategic Plan

A. All development shall generally conform to the CB South Village Center Strategic Plan, shown in Figure 8-1.

8.6 Required Land Uses

A. Development within the CB South Village Center shall meet the following requirements consistent with the CB South Village Center Strategic Plan.

1. **Commercial Building Zone.** Development within the Commercial Building Zone as shown on the CB South Village Center Strategic Plan shall be designed with the Commercial Building Zone Standards and other standards set forth in this Section.

2. **Active Ground Floor Use Zone.** Development within the Active Ground Floor Use Zone as shown on the CB South Village Center Strategic Plan shall be designed to meet the Commercial Building Zone Standards and the following standards:

    a. The first or ground floor use of a building located in the Active Ground Floor Use Zone shall be a commercial use as allowed by the Regulations.

    b. Second floor uses may be any use as permitted by the Regulations.

3. **Village Center Core Residential Zone.** Development with the Village Center Core Residential Zone may be developed with multi-family buildings, commercial development or mixed-use development pursuant to the CAMP.

4. **Village Center Perimeter Lot Zone**. Development within the Village Center Perimeter Lot Zone as shown on the CB South Village Center Strategic Plan may be developed in accordance with the CAMP.

8.7 DRC Specific Approval

Where the CAMP allows the DRC to grant a specific approval, the DRC can grant approval of a site specific plan that does not meet the requirements of a section if such section allows the DRC to grant a specific approval. The determination of approving or denying a specific project is a subjective determination of the DRC based in its sole discretion.

8.8 Dimensional Standards

A. Dimensional Standards for the CB South Village Center

Dimensional Standard	Requirement
Minimum Lot Area	2,500 sq. ft.
Minimum Lot Width	25 feet
Maximum Floor Area Ratio	1.68:1[2]
Open Space Required	None
Minimum Floor Area	1,500 sq. ft.

[1] Can be varied by the DRC for larger buildings through the variance process with findings that the Vision and Goals and Design Principles as articulated herein will be met.
[2] Example: 10,000 sq. ft. lot allows for maximum of 16,800sq. ft. of floor area.

8.9 Minimum Setbacks

A. No building or any portion thereof (except street frontage roof overhangs) shall be placed on any lot nearer to the front, side or rear property line than as set forth below:

Area	Front	Rear	Side
Village Center Core Lots	0'[1]	15'[5]	0'-5'[2]
Village Center Perimeter Lots with Commercial or Mixed Uses	0'[3]	25'	7.5
Village Center Perimeter Lots with Residential Only Uses	15'	25'	7.5'
Parking Area Setbacks	0[4]	0[4]	0[4]

[1] A zero foot (0') front yard setback is required for development in the Village Center Core Lots to have continuous buildings located along the front property line unless an active space is provided in front of the building (dining area, seating area, etc.) in which case the maximum setback allowed will be 15'.
[2] Side setback subject to application of adopted Fire Code requirements.
[3] A zero foot (0') front yard setback is required for development in the Village Center Perimeter Lots to have continuous buildings located along the front property line unless an active space is provided in front of the building (dining area, seating area, etc.) in which case the maximum setback allowed will be 15'.
[4]No parking area setback is required provided off-site snow storage can be provided in accordance with the CAMP and Gunnison County requirements and the parking area has adequate landscape buffering if such is required by the DRC. On street parking may cross over a property line if it is approved in accordance with Section 8.12(A)(3).
[5]Rear setback may be reduced to 0' for Village Center Core Lots if common parking, trash/recycling, snow storage and other common areas are provided to serve the development.

Figure 8-1. CB South Village Center Strategic Plan (Refer to Legend on Mirrored Page)

Crested Butte South Village Center Strategic Plan

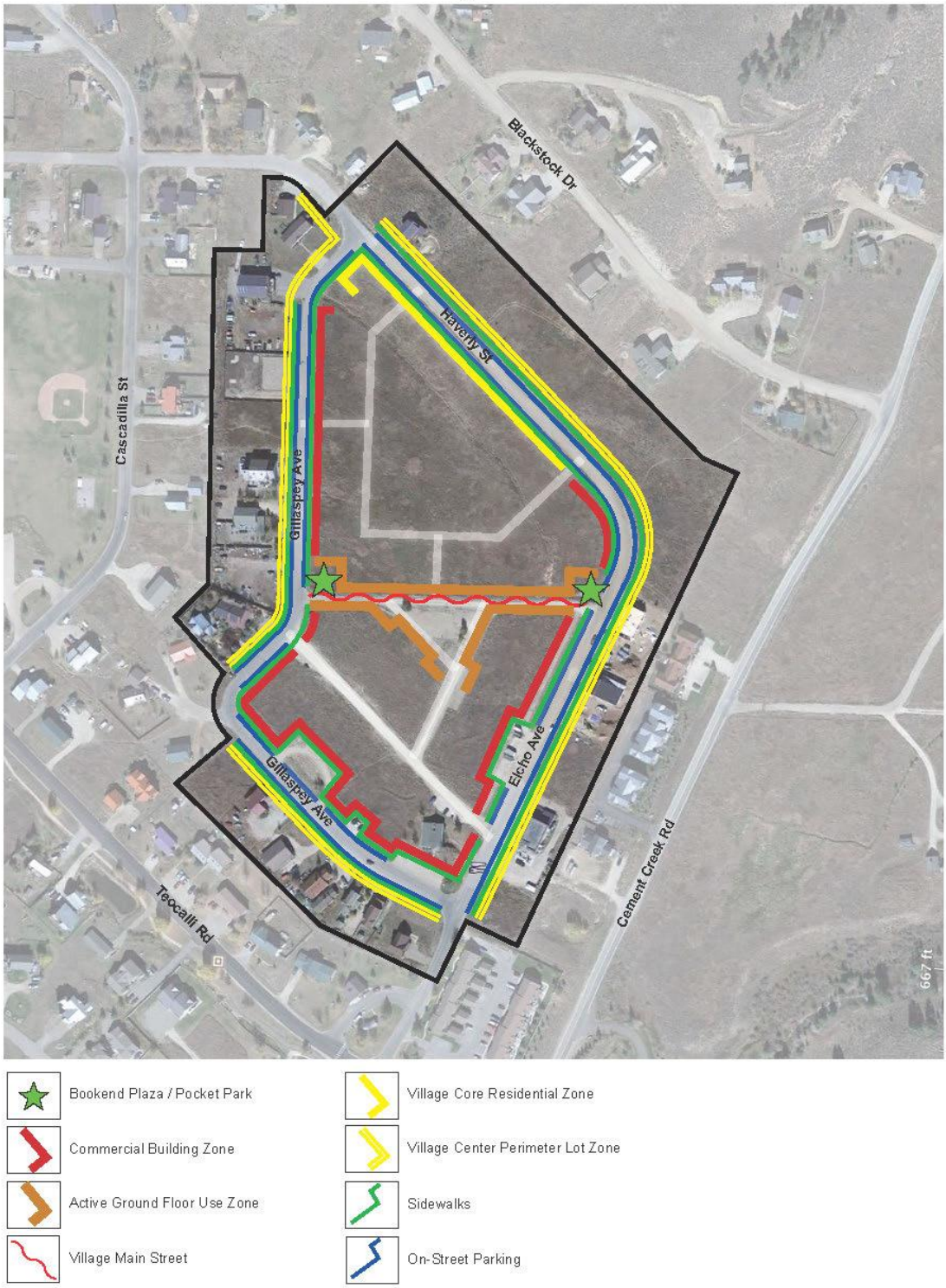

Figure 8-1. CB South Village Center Strategic Plan

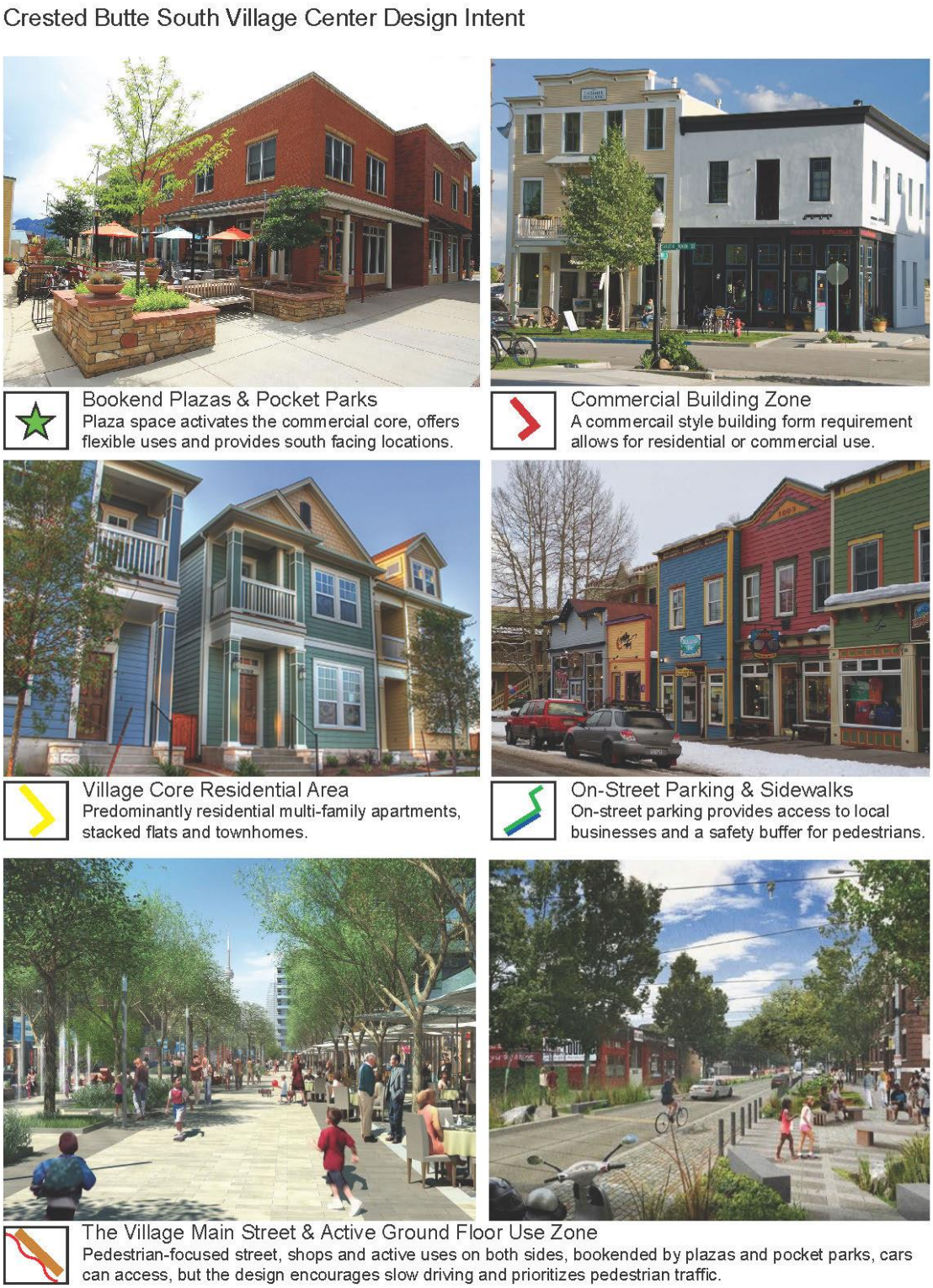

B. Setback Exception for Zero Lot Line Development. If a single building is constructed on two or more lots with a party wall or shared common wall on the lot line, no side yard setback is required from shared interior lot lines.

C. Setbacks for Parking Areas and Driveways in the CB Village Center. None provided snow storage and landscape buffering can be demonstrated in accordance with the CAMP.

D. Awnings and signs are allowed to extend beyond the property line into the right-of-way with specific approval from the DRC, considering safety and the need for summer heat reduction, and the execution of an encroachment permit.

8.10 Building Height

A. **Commercial Buildings in the Village Center Core.** Buildings in the Commercial Building Zone as shown on the CB South Village Center Strategic Plan Village Center Core buildings shall be no more than two (2) stories above finished grade with a maximum building height of 35 feet. Basements do not count as a story but must comply with the maximum height limit.

1. If the height is increased by an amendment to the Covenants and Restrictions, the maximum number of stories and building height shall be per the adopted amendment to the Covenants and Restrictions.

B. **Residential Only Buildings in Village Center Core.** Residential only buildings located in the Residential Zone shall be no more than two (2) stories above finished grade with a maximum height of35 feet. (roof slopes of 2:12 or less). Basements do not count as a story but must considered in calculating the maximum height.

C. **Village Center Perimeter Lot Buildings.** Buildings located within the Village Center Perimeter Lots shall not exceed two stories or 32 feet for all roof forms.

D. **Measurement and Exceptions.** Building height shall be measured vertically at a right angle to the horizon line from any point on a proposed or existing highest roof ridge (including but not limited to the roofing membrane) to the natural grade or finished grade, whichever is more restrictive, located directly below said point of the roof or eaves.

E. **Covenant Change to Increase Height.** The building height limitations in allowable feet and stories set forth in this section may be changed in accordance with any amendment to Covenants and Restrictions.

F. Figure 8-2. Building Height Measurement

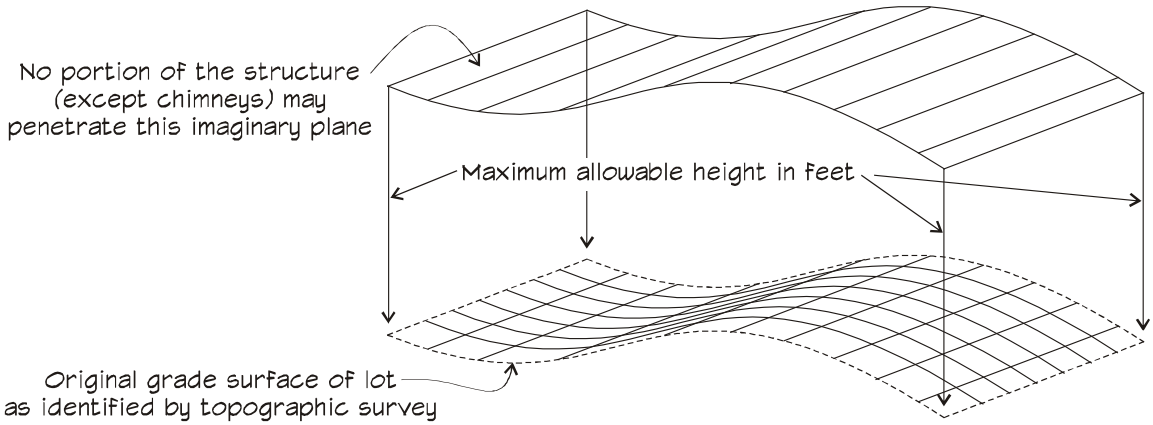

1. If the P.O.A. staff determines that there are minor irregularities in the natural grade, these areas shall not be used in determining compliance with the building height limitation set forth herein, and the surrounding typical natural grade shall be used.

2. Window wells and similar building appurtenances installed below grade that extend out five (5) feet or less (as measured from the outside of retaining wall) shall not be counted as the finished grade for the purposes of calculating building height if such features do not add to the perceived height of a building. Garage entries are also not counted as lowest grade for determining building height.

G. No portion of any structure (except as provided for in Subsection E below) shall exceed a true vertical dimension of the heights prescribed below, as measured vertically from the existing grade directly below.

H. Existing grade shall be based a certified topographic survey of the building site with one (1) or two (2) foot contour intervals in a United States Geological Survey ("USGS") datum prepared by a Colorado professional licensed land surveyor.

I. In the case of highly irregular topography not caused by man-made impacts within the existing site development area, an average slope may be used (see below). On any lot/property exhibiting evidence of cut or fill grade not authorized by the P.O.A. the applicant may be required to provide a professional soil analysis to determine the natural grade. No excessive fill, excavation or other artificial methods of grade manipulation will be permitted to create an exaggerated building site to manipulate the building height measurement.

J. Unenclosed rooftop mechanical equipment may exceed the maximum height up to 4 feet over the maximum height provided such elements are screened from adjoining public rights-of-ways to the extent practicable. Elevator shafts may exceed the maximum height if they are located on the roof to screen and it is shown that such height is needed to meet elevator design specifications and the requirements of the adopted building regulations.

8.11 Building Design

The DRC may grant specific approvals for designs that vary from the following standards if the main intent and goals of the CB South Village CAMP are met.

A. Commercial Building Zone Standards

1. Buildings located in the Commercial Building Zone as shown on the CB South Village Center Strategic Plan shall be designed with the following standards to ensure that initial residential uses can be easily converted to commercial uses:

    a. First floor shall be designed with a height of 14’ to 15’ to the structural framing; and second floors with a height of 10’ to 11’ to the structural framing to the roof above.

    b. The first floor street façade shall be designed with a predominantly clear glass exterior material. Tinted or mirrored glass is prohibited.

    c. If a façade is greater than 60 feet, the façade for such a building shall provide substantial changes in wall and roof planes and new architectural building design to look as if each 60 feet is a new building on a separate lot).

    d. When residential development is initially proposed on the ground floor, the first floor residential units are separate from dwelling units on the upper floors to allow for ease of conversion to future commercial uses. Egress on the front of the building for the upper floors via stairs will be limited on the front facades to maintain the desired commercial storefronts and predominant glass area.

    e. An example of the desired commercial building in the Commercial Building Zone is shown in Figure 8-3.

    f. All Commercial Building Zone floor area may have 100% residential use on first floor as long as the building is built to the commercial design standards and has elements of a commercial building.

Figure 8-3. Example of a Commercial Building in the Active Building Zone

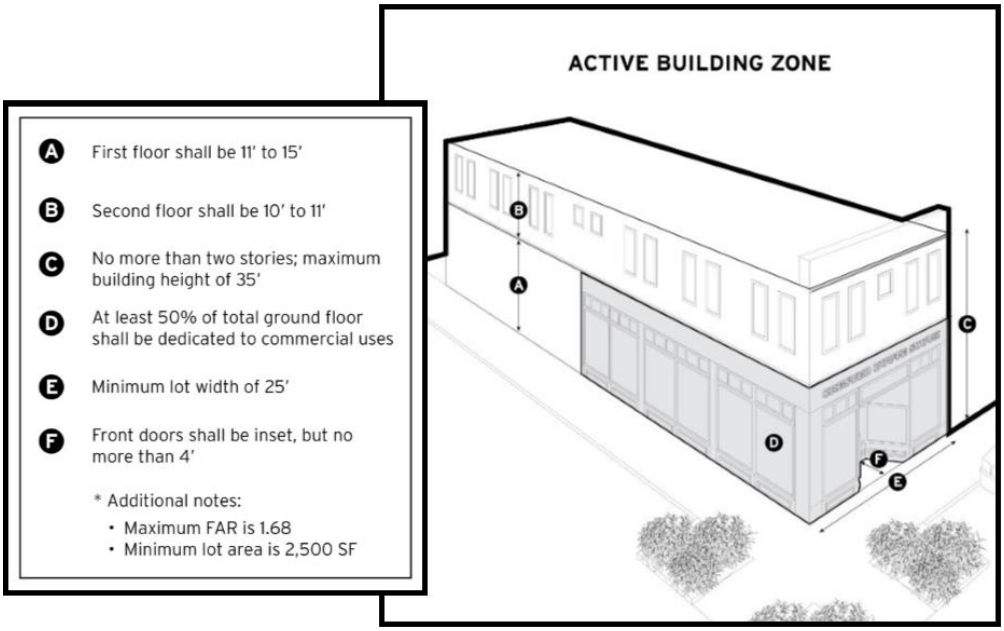

B. Active Ground Floor Use Zone Standards

1. Buildings located along the Active Ground Floor Use Zone as shown on the CB South Village Center Strategic Plan shall be designed in accordance with the Commercial Building Zone Standards set forth above.

2. At least 50% of the total ground floor gross floor area for building along the zone shall be dedicated to commercial land uses.

3. One hundred percent (100%) of the ground floor building frontage along the Active Ground Floor Use Zone shall be dedicated to commercial land uses, excluding residential doorways to stairs or elevator access areas.

4. Commercial land uses shall be provided on the first or ground floor and be located in the in the front of the building in the Active Ground Floor Use Zone.

5. Windows on the first floor shall be transparent with clear glass to show the active commercial uses occurring inside.

C. Residential Zone Standards

1. Buildings located in the Residential Zone as shown on the CB South Village Center Strategic Plan shall be designed with the following standards:

   a. Maximum front façade of 60 feet unless the design for larger building facades provides substantial changes in wall and roof planes and new

architectural building design to look as if each 60 foot façade is a new building on a separate lot.

D. Village Center Perimeter Lot Zone Standards

1. Buildings within the Village Center Perimeter Lot Zone do not have special zone design standards but must comply with the applicable standards set forth herein.

E. Building Orientation

1. Front facades of all principle structures shall parallel the street.

2. On corner lots where the intersection is at 90 degrees, both street-facing facades shall be parallel to the intersecting streets. Other buildings shall be designed to have the front facade placed along the primary street or pedestrian area as determined by the DRC.

3. On curvilinear streets, the front façade of the principle building shall be parallel to the tangent of the midpoint of the arc of the street.

4. Buildings shall be oriented consistent with the lot direction.

5. Tall structures adjacent to plazas and parks, etc. shall provide architectural elements that step the building down to a pedestrian scale, such as decks, awnings, or other architectural elements.

6. Consideration shall be given to where shading will occur in the design of structures as this will be where snow accumulates in winter.

7. Building orientation may also be determined as a DRC specific approval.

F. Building Form and Massing

1. Building forms shall be primarily rectangular forms, or building forms that were found historically in the West.

2. Building facades shall provide visual interest, by incorporating awnings, transoms or other traditional features on the ground floor, and bays or balconies or other architectural detailing on upper floors.

3. Arcades, porches, bays and balconies are encouraged and may be provided to break up building massing. Bays and balconies shall be encouraged on the upper floors of mixed-use buildings.

G. Single-family and Duplex Form and Massing

1. Duplex residences shall be asymmetrical, and shall appear as one residence.

2. Garages shall be designed to be subordinate to the overall design.

H. Roof Design

1. Roof forms within a development and for individual buildings shall have varied ridgelines and planes to break up building and development mass. The DRC may require significant stepping to break up development or a ridgeline over 60 feet.

2. Commercial and mixed-use buildings shall have roof slopes that are 3:12 slopes or less while residential buildings shall have roof slopes of 4:12 or greater unless the DRC grants a specific approval.

3. Reflective roofing material is prohibited.

4. Non-reflective, flat finish metal roofing material is permitted if the material has a dull appearance.

5. All building entries, public spaces, decks and patios shall have roof forms that will protect pedestrians from roof snow and ice shedding.

6. Vents and rooftop equipment will be screened from pedestrian views to extent practical.

7. Restaurant vents and vents for other businesses that have noxious or nuisance emissions shall be located and directed to minimize impacts to surrounding properties, with a preference for upward discharge.

8. Equipment will be designed and maintained to have a decibel level so as not to violate Gunnison County's or the P.O.A's Noise Guidelines.

9. Roof drainage plans will be provided and integrated into the overall drainage plan for a site.

I. Exterior Materials

1. Primary building exterior materials shall be:

   a. Log or log-veneer;

   b. Board-and-batten;

   c. Vertical and horizontal wood siding;

   - Diagonal wood siding is prohibited.
   - Minimum size of 6 inches.

   d. Hardie® Plank or similar cement-based types of siding materials that have a natural appearance with wood textures;

   e. Brick; and

f. Stone as approved by the DRC.

2. Lesser accents, not to exceed 30% of the total amount of exterior siding per elevation (applicable to all areas of CB South), can include:

   a. Stucco;

   b. Natural stone, or cultured stone that is natural appearing as reviewed and approved by the DRC;

   c. Wood shingles;

   d. Metal siding, fascia, soffits, and structural beams or posts; and

   e. Board form or other architectural grade concrete.

3. The base of all buildings shall be designed with exterior materials to withstand average snow depths and snow accumulations from any roof sheds above. Examples of such include metal or stone base materials.

4. Materials, patterns, and combinations of materials that vary from the above requirements may be considered by the DRC as a specific approval with the findings that the materials are appropriate for CB South and compatible with adjacent structures and the CB South Village Center Vision and Goals and General Design Principles.

J. Exterior Color

Exterior wall colors shall be natural, warm earth colors. Primary, bright or dramatic colors may be used as accent on trim, fascia and doors, and then only sparingly, and must be approved by the DRC, considering compatibility with neighboring properties.

K. Windows

1. Window openings and patterns shall be responsive to good solar design principles. The design of exterior walls shall also respond to solar exposures.

2. Large uninterrupted expanses of glass shall be avoided except on southern facades and to primary views.

3. Combinations of windows shall be used to establish a human scale to building facades.

4. Windows shall appear to be recessed into large walls. Window patterns and reveals need to be carefully studied to create interest and variety.

5. Window openings and trim shall be consistent in proportion and scale with the associated building.

6. Window frames and trim shall be painted or stained wood, fiberglass, composite, painted or clad aluminum or patina copper clad.

   a. Aluminum is allowed as painted clad material only.

   b. The use of vinyl windows is a specific approval of the DRC based on appearance and durability in high alpine environments

L. Doors and Entryways

1. Commercial and Mixed-Use Buildings

   a. Primary entrances shall orient to plazas, parks, or pedestrian-oriented streets and parking.

   b. Doors shall be inset to avoid the front door interfering with pedestrians on the adjacent sidewalk, but no more than four feet (4'). Entries shall not create a cave-like effect.

   c. All building entries shall be protected from falling and shedding snow.

   d. Secondary doors will be provided for parking, trash service, etc.

8.12 Landscaping

A. General Landscaping Requirements. (Refer to the *Crested Butte South Residential Design Guidelines* for more specific requirements for residential lots).

1. Drought tolerant and native species shall be used wherever possible.

2. Native wildflowers shall be used to create seasonal color and interest in key locations.

3. Evergreens shall be used sparingly, and only in appropriate places where they have plenty of room to grow.

4. Natural irrigation in the form of ditches and drip irrigation is encouraged while other irrigation shall be limited.

B. Landscaping Plan Requirements

Applicants shall prepare a landscaping plan that shall indicate the type and location of vegetation to be included on the site. The plan shall also contain a planting schedule (a table that indicates species, size, and quantity), a plan for maintenance of all landscaping to be installed, and an irrigation plan. After disturbing any soil on any lot within the CB South Special Area, all lots shall be kept weed free, in accordance with the Covenants and Restrictions, Gunnison County, and State of Colorado statutes. All street trees shall be a minimum of 3" caliper as measured 4' from the top of the root ball. In the event that the DRC finds that it is impractical or a hardship to provide the required landscaping as set forth below, then they may

request cash-in-lieu of the trees. The cash-in-lieu amount shall be determined by the P.O.A. Board and modified from time-to-time.

1. All CB South Village Center development shall provide, and maintain in good health, a minimum of two (2) street trees, 25' on center in the front landscaping strip.

2. In addition to the required landscaping set forth in the *Crested Butte South Residential Design Guidelines,* the following shall be provided in all surface parking areas to reduce heat and break up impervious surfaces: one (1) tree (min. 3" caliper measured 4' above the top of root ball) planted for every ten exterior parking spaces.

3. At least one tree and three shrubs (min. 5-gallon size) shall be provided per each 500 square feet of the area that is shown as being open on the landscaping plan. All landscape planting areas that are not dedicated to trees or shrubs shall be landscaped with native grass, ground cover, or other appropriate landscape treatment.

4. No material or temporary soil stockpiling shall be placed within four feet (4') of existing shrubs or in the drip line of trees. During construction, temporary protective barriers or tree wells shall be installed around each tree, plant and/or group of plants that are to remain on site. Protective barriers shall be of a durable material that will last until construction is completed. Snow fences and silt fences are examples of acceptable barriers.

5. All dead or dying trees shall be removed from the site and replaced on a caliper-for-caliper basis in accordance with the landscaping plan if part of P.O.A. approved landscaping. If trees and limbs are reduced to chips, they may be used as mulch in landscaped areas.

6. To avoid landscape materials from blocking driver sight distances, no material greater than thirty inches (30") in height shall be located within fifteen feet (15') of a driveway or road edge.

7. All landscaping design shall provide adequate space for snow plowing, not be located in roof snow or ice shedding areas (or be tolerant of such forces) and areas for snow storage (33% or driveway and parking areas), that shall be indicated on the landscaping plan. See Section 9.17 for snow storage requirements.

C. Walls, Fences and Berms

1. Walls and Fences.

   a. Walls and fences in the side or rear of a property shall have a maximum height of 8 feet unless otherwise approved by the DRC for deer protection fencing for garden areas or needed screening of development.

b. Walls and Fences in all areas forward of the front façade of the building, fences, hedgerows and planter boxes shall not be more than 42” high, measured from natural grade unless otherwise approved by the DRC to screen unsightly areas.

c. Walls and fences may be constructed of wood, metal, stone or other materials approved by the DRC.

2. Berms

a. Man-made berms are prohibited in front yard setback.

b. The maximum slope of a berm shall be 3:1.

c. Berms shall be landscaped with tree, shrubs and flowers to soften their appearance, with irrigation to ensure plant success.

D. Site Protection

1. Topsoil moved during construction shall be stockpiled and redistributed on all re-graded surfaces in order to provide an even cover to all disturbed areas of the lot. Such surfaces shall be stabilized by seeding or planting.

2. All stumps, other tree parts, litter, brush, weeds, excess or scrap construction materials, and other debris shall be removed from the site within six (6) months of the issuance of a Certificate of Occupancy and properly disposed.

3. Landscaping of all cuts and fills and/or terraces shall be sufficient to prevent erosion. All roadway slopes steeper than one-foot vertical to three feet horizontal (1:3) shall be planted with ground cover appropriate for soil conditions, water availability, and the immediate environment.

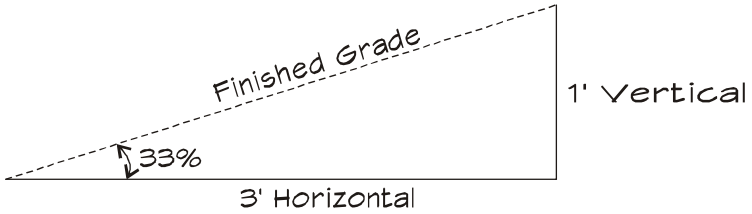

4. No excavation of any lot shall be made except in connection with construction of an improvement approved by the DRC, and upon completion, exposed openings shall be back-filled and disturbed ground shall be graded, leveled and restored to its original condition, or planted with landscaping material as provided herein.

E. Planting Specifications

Deciduous trees shall have at least a three (3) inch caliper (measured 4’ from top of root ball) at planting. Sizes of evergreens and shrubs shall be allowed to vary depending upon the characteristics of use and their location and the types of shrubs proposed, but as a minimum shall be six feet (6’) in height to ensure good health. Trees shall be staked upon planting and

provision made by the owner for regular watering and maintenance until they are established. Dead and dying plants shall be replaced by the owner no later than the following growing season.

F. Timing

All landscaping shall be installed no later than one growing season after substantial completion, as that term is defined herein, of construction on the lot. In no case will the portion of the performance deposit for landscaping installation be refunded until all required landscaping is installed and has survived at least two growing seasons.

8.13 Parking Regulations

A. Parking Requirement

Development within the CB South Village Center is required to provide and maintain the following number of parking spaces:

Land Use	Number of Parking Spaces
Commercial, Retail and Office[1]	1 space per 1,000 sq. ft. of leasable area
Assembly, Bar and Restaurant	1 space per 300 sq. ft. of gross floor area
Lodging and Accommodation Units	0.75 space per hotel or lodging room
Mutli-Family Units	
One Bedroom or Studio Units	1 space per unit
Two or More Bedroom Units	2 spaces per unit
Duplex Unit	2 spaces per unit
Single-Family Unit	2 spaces per unit

[1]The number of parking spaces shall be rounded up to the next whole number. Example: 1,200 sq. ft. retail shop requires 2 parking spaces.

1. Any other use not listed, or a use that the DRC believes will generate more traffic than the standards above, may be required to provide additional parking as determined by the DRC based on the immediately adjacent property land uses, public parking availability, parking standards for other comparable mountain communities, or parking research publications.

2. The parking requirements contained herein may be changed in accordance with any amendment to Covenant and Restrictions. Each owner and project homeowner's association for a multi-family project shall be responsible for compliance with these standards by its occupants, residents, employees and visitors.

B. On-Street Parking Allowance

The DRC may approve on-street parking adjacent to the project to meet the parking requirements if the following requirements have been met:

1. The project developer, POA or owner has a maintenance and snow plowing-snow removal agreement to maintain the connecting sidewalks, parking areas, the removal of snow from the adjoining street, and the maintenance of paving,

signage and stripping.

2. The P.O.A. is indemnified for the parking;

3. The developer enters into an agreement with the County for parking in a public right-of-way;

4. The developer paves the adjoining street if such is not already paved and provides paved parking in accordance with the CAMP

5. Parking is maximized within the private land prior to requesting on-street parking; and,

6. A five foot landscaped buffer is provided between the curb and sidewalk that may be used for snow storage.

7. The County has approved the on-street parking.

The approval of on-street parking is subject to DRC in its discretion if it is determined to be in the best interests of the POA.

C. Change of Use/Occupancy

When a change of use is proposed, the new use will only be allowed if it is shown to the DRC that adequate parking will be provided in accordance with the CAMP.

D. Shared Use Parking

When the peak use period for required parking for one land use will not overlap with the peak use period for required parking for another land use located on the same or adjacent lots, the DRC may allow the reduction of the required number of parking spaces of the total required. A subsequent change in use will require evaluation by the DRC and additional spaces may be required.

E. Bicycle Parking

Bicycle parking is allowed to replace a required parking space if a bike rack is provided.

F. Parking Space Design

1. **Size**

   a. Angled parking that is between thirty degrees (30°) and ninety degrees (90°) to the driving aisle shall be nine feet (9') in width by twenty feet (20') in length.

   b. Parallel parking spaces shall be a minimum of 22’ long and 8’ wide.

   c. ADA accessible parking spaces shall be designed according to the Building Code. Accessible parking spaces shall be counted as part of the required parking spaces.

2. **Compact Parking.** Up to 1/3 of the required parking may be provided in designated/signed compact motor vehicle spaces that measure nine feet in width (9') and sixteen feet (16') in length. Compact motor vehicle spaces shall be designated as a general common element and be signed as compact parking spaces.

3. **Clearance for Parking Garages.** The minimum clearance for each parking space shall be designed according to Building Code.

4. **On-Site Parking Space Design Preference.** Head in parking is preferred over diagonal parking and diagonal parking is preferred over parallel.

5. **Preferred Parking Lot Placement.** Parking lots shall be placed to the rear of buildings where possible. On-street parking may be allowed if approved pursuant to Section 8.12(A)(3).

6. **Garage Back-Out.** Garages shall be designed to ensure that cars backing out shall have adequate backup space when exiting a garage.

7. **Aisle Width.** The driveway and aisle width for either surface lots or parking garages shall be twenty-two feet (22') unless the adopted Fire Code requires greater width.

8. **Maximum and Minimum Parking Area Grade.** The minimum parking area grade for a surface parking lot is one-half percent (0.5%) and maximum grade for a parking area is six percent (6%), with a maximum grade of two percent (2%) for accessible parking spaces. The maximum grade for parking garages shall be six percent (6%) unless a Colorado professional engineer determines that a higher grade will provide for safe parking and not result in motor vehicle damage or pedestrian injury.

9. **Access to Parking Spaces**. Each required parking space shall have unobstructed access from a road or alley or from an aisle or drive connecting with a road or alley without requiring the movement of another vehicle unless the review authority approves tandem parking.

10. **Parking Area Surfacing.** Parking surfaces shall be asphalt or concrete unless an alternative surfacing is approved by the DRC.

11. **Snowmelt Systems**. Snowmelt systems may be permitted as long as the system provides (i) any required P.O.A. or Gunnison County energy offset or mitigation as set forth in the governing documents; and (ii) a covenant is recorded in official records of Gunnison County against the property that requires the snowmelt systems is used and maintained.

12. **Parking Lot Landscaping**. See Landscaping section.

13. **Multi-family Tandem Parking.** Tandem parking with one parking space located behind another may be permitted by the DRC as a specific approval if it is shown

that such parking will be accessible and functional as evidenced by a plan that provides for the vehicles behind another vehicle to be moved without the vehicle owner being present. Examples of functional tandem parking may include the use of a lock box or access keys for all tandem parked vehicles, or if the two tandem spaces are shared by family members.

8.14 Exterior Lighting Design. Lighting shall be designed in accordance with the following standards.

1. No exterior lighting of any nature shall be installed or operated without approval of the DRC. All interior and exterior lighting must be arranged or shielded so as to avoid excess glare or reflection onto any adjacent property, any adjacent street or into the path of oncoming vehicles.

2. No flashing, traveling, animated or intermittent lighting shall be visible from the exterior of any building.

3. Commercial storefront displays shall be illuminated from the interior of the building.

4. Exterior lighting shall be warm (yellow vs. grey), and downcast and comply with the LUR.

5. Only full down-cast, fully shielded cut-off type light fixtures shall be used.

6. Street, sidewalk or path lights will be allowed upon approval of the P.O.A. Board and the CB South Metro District, if located in the public easement or street right-of-way. The fixture style shall be full cut off, shielded lighting as determined by the DRC and shall be consistent throughout the area.

    a. Street lights and pedestrian lights in the public right-of-way are allowed if their location/ placement is approved by the CB South Metro District, in cooperation with the P.O.A. subject to the requirements of this section.

7. Seasonal and decorative lights are allowed.

8.15 Street Design

A. Streets shall be designed in accordance with the Gunnison County and Crested Butte Fire Protection District standards in effect at the time of development except as may be varied as specified and allowed herein.

1. All new or improved roads and streets shall be approved by Gunnison County.

B. Streets shall be paved.

C. One-way streets may be approved by the DRC and the Crested Butte Fire Protection District with nine feet (9’) to twelve feet (12’) of travel way and proper signage.

D. On-street parking may be approved by the P.O.A. DRC as set forth in Section 8.13(A)(3) with spaces designed in accordance with the Parking Standards.

E. The minimum public right-of-way to be dedicated on a new plat shall be 40 feet for a two-way street or primary streets and 30 feet for a one-way street or side street.

F. All new streets shall be subject to review and approved by the CB South Metro District and Crested Butte Fire Protection District and the Gunnison County as applicable.

G. A Colorado professional engineer shall design all new proposed streets, bridges and associated grading and drainage.

H. The design and construction paving of streets shall be the responsibility of the developer. The P.O.A. may require that new streets be maintained after construction by the lot owner(s) that obtain access from the streets, including but not limited to snow plowing, resurfacing, sign maintenance, curbs and any landscaping.

I. Streets shall be maintained by the lot owner(s) in accordance with the approved plans.

J. The DRC may grant a variation to the street standards provided it finds such exemption will not adversely affect public health, safety and welfare.

8.16 Sidewalks

A. Sidewalks shall be provided:

1. In accordance with the CB South Village Center Strategic Plan.

2. From and around parking areas as required by the DRC connecting to the overall sidewalk system and building entries.

B. Sidewalks Design

1. Sidewalks shall be a minimum of six feet (6’) wide unless a larger size is required by the DRC to allow for heavier pedestrian or recreational traffic or accommodate outdoor seating areas. Sidewalks for the “circuit” as shown on the CB South Strategic Plan shall be eight feet (8’) wide.

2. Sidewalks along the Commercial Building Zone as shown on the CB South Village Center Strategic Plan shall be a minimum of 10 feet (10’) wide.

3. Sidewalks shall be constructed of concrete.

4. The DRC may approve of other path materials for pedestrian paths that connect to the CB South Village Center.

5. Sidewalks and paths that are intended to provide public access across private property shall be dedicated to the public via right-of-way or easement.

6. Pedestrian lights and street furniture shall be provided along sidewalks wherever

possible.

7. Exceptions may be granted on a case-by-case basis in the interest of public safety.

8. Public access and maintenance easements shall be provided to the P.O.A. for the sidewalks.

C. Driveway and Parking Area Design

1. Driveways shall be designed in accordance with Gunnison County and Fire District standards in effect at the time of development except as may be varied as specified and allowed herein.

2. Driveways and parking areas shall be paved adjacent to paved streets and roads.

3. One-way driveways may be approved by the DRC with 9' of travelway and proper signage.

4. Access and infrastructure easements/ and or rights-of-way may be required where a driveway provides access across private property to lots that are sold or can be sold to separate parties.

5. A Colorado professional engineer shall design all new proposed driveways, bridges and associated grading and drainage.

6. The design and construction paving of driveways shall be the responsibility of the developer. Driveways shall be maintained after construction by the lot owner(s) that obtain access from the driveway, including but not limited to snow plowing, resurfacing, sign maintenance, curbs and any landscaping.

7. Driveways shall be maintained by the lot owner(s) in accordance with the approved plans.

8. The DRC may grant a variation to the driveway standards provided it finds such exemption will not adversely affect public health, safety and welfare.

8.17 Storage, Loading and Service Areas in the CB South Village Center

A. No materials, supplies or equipment shall be stored on a lot except inside an enclosed building.

B. All trash and loading facilities, including turn-arounds and docks, shall be provided at the rear of the building and must be screened to minimize their visibility from any street or alley. Screening of service areas and loading docks shall consist of any approved combination of earth mounding, landscaping, walls and/or fencing.

C. Locations of trash enclosures relative to snow storage shall allow access and maintenance

of the dumpsters located within them and shall not impede the free movement of trash removal vehicles.

D. Trash dumpsters and other waste/recycling containers serving multi-family or commercial uses shall be screened by a wall or fence. As a minimum, fully covered enclosures must be 6' high with gates and must be bear-proof.

E. In the Village Center Core area, a common enclosed trash dumpster with space for a recycling area shall be established in the rear of each block for a common group of specified users. This area shall be designated as a common area at the time of platting of the remainder of Block 6.

8.18 Snow Storage and Snow Staging in CB South Village Center

Adequate snow storage areas are required for each site and on-site, and snow storage in dedicated parking areas is prohibited. No building shall be allowed to shed snow off of the property on which it is located or onto any public right-of-way.

A. Snow Storage Obstructions. Snow storage areas shall be free of fences, landscaping (except for street trees and ground cover), retaining walls, and other obstructions of a similar nature. Alternative methods of snow storage may be considered by the DRC.

1. Pathways, signage, vegetation, fencing, and lighting shall be configured to cause the least obstruction to snow plowing.

2. Locations of trash enclosures relative to snow storage shall allow access and maintenance of the dumpsters located within them but shall not impede the free movement of trash removal vehicles.

B. **Formal Review by CB South Metro District**. All designs for snow storage shall be subject to review and approval by the CB South Metro District.

C. **Minimum Width Adjacent to Plowed Area**. Designated snow storage areas shall not be less than six feet wide and, to the maximum extent feasible, shall be located adjacent to the area of the project from which snow is to be removed.

D. **Minimum Storage Area**. A snow storage area(s) that is a minimum of thirty-three percent 33 % of size of all plowed areas (parking, all walkways, etc.) shall be provided on site. Any approved snowmelt areas will be deducted from the plowed areas.

E. **Off Premise Snow Storage**. The DRC may approve a snow storage plan for off-site snow storage if the following standards are met:

1. On-site snow storage has been maximized to the extent practicable.

2. The site is as close as practicable to CB South;

3. The developer has received approval from the property owner for perpetual easement for snow storage and access to such snow storage area to be recorded in Gunnison County;

4. Any Gunnison County approval has been provided to the P.O.A. Manager.

5. The developer enters into a development agreement that applies to successors and assigns that requires the removal of snow to the off-premise location, with the ability to modify the agreement for a new snow storage location or new method to manage snow.

8.19 CB South Metro District and Crested Butte Fire Protection District Approval of Proposed Building and Structure Locations

All proposed building and structure locations in CB South are subject to review by the Crested Butte Fire Protection District and the Crested Butte South Metro District.

8.20 Mailbox Design and Location

No mailbox or newspaper box or other receptacles of any kind for use in the delivery of mail or newspapers or magazines or similar material shall be erected or located on any lot unless and until the size, location, and design for said box or receptacle shall have been approved by the DRC, considering safety and compatibility with the immediate area.

8.21 CB South Village Center Signs

All signs shall be designed and installed per the *CB South Sign Regulations*.

8.22 Pioneer Plaza and Remainder of Block 6 Master Development Plan

A. Pioneer Plaza. Pioneer Plaza property owners shall meet the following requirements:

1. The Pioneer Plaza owners' association needs to amend the covenants applicable to the Property in order to allow development under the amended CAMP.

2. An overall plan is prepared by the Pioneer Plaza HOA that illustrates the overall parking, sidewalks, landscaping, snow storage plan, and similar common improvements that results in a Master Development Plan that must be generally followed by each lot developer within Pioneer Plaza unless the DRC approves an amendment to the Master Development Plan.

B. Remainder of Block 6. The Remainder of Block 6 shall meet the following requirements:

1. The owner shall submit a subdivision application to the P.O.A and Gunnison County that may split up the property consistent with the CAMP.

2. An overall plan is prepared by the first developer of the Remainder of Block 6 that illustrates the overall parking, sidewalks, landscaping, snow storage similar common improvements that results in a Master Development Plan that must be generally followed by each lot developer within the Remainder of Block 6 unless the DRC approves an amendment to the Master Development Plan.

SECTION 9. RESIDENTIAL DESIGN STANDARDS

9.1 Residential Design

The Residential Design Standards apply to all residential lots in the CB South Special Area, outside of the Village Center Core area. These standards are set forth in the *Crested Butte South Residential Design Guidelines.*

9.2 Driveway Grades

Driveway grades for residential properties shall be in accordance with the *Crested Butte South Subdivision Residential Design Guidelines*. No variances shall be granted from these driveway grade/slope standards unless approved by both the P.O.A. Board and the Crested Butte Fire Protection District.

9.3 CB South Special Area

The CB South Special Area shall promote a compact development pattern that discourages sprawl, in which denser and more intense forms of commercial, mixed use and residential development will occur contiguous to or in close proximity to the CB South Village Center only. Multi-Family residential development is encouraged to develop in proximity to the CB South Village Center and is allowed in the First and Second Filings only.

9.4 Residential Lots

Buildings on residential lots located outside of the CB South Village Center shall have a maximum height of 32 feet.

9.5 CB South Metro District and Crested Butte Fire Protection District Approval of Proposed Building and Structure Locations

All proposed building and structure locations in CB South must be approved by the Crested Butte Fire Protection District and the Crested Butte South Metro District. No building or any portion thereof (except roof overhangs) shall be placed on any lot nearer to the front, side or rear property line than as set forth herein or in the Crested Butte South Residential Design Guidelines.

9.6 Variance Requests

Variance requests for lots located in the CB South Special Area will be heard by the P.O.A. Board in accordance with the process set forth in *Section 6* above and do not require an additional hearing by Gunnison County.

SECTION 10. BEGINNING AND COMPLETING CONSTRUCTION

A. All construction activity must be in compliance with the CAMP, and the Noise Guidelines for Crested Butte South and the CB South Construction Rules and Regulations, as each may be amended from time to time.

B. After commencement of construction of any improvement, the owner shall diligently execute the construction thereof such that the improvement shall not remain in a partly finished condition any longer than is reasonably necessary for completion thereof.

C. All landscaping required to be provided on any lot shall be completed within 90 days after the substantial completion of the construction of any buildings to be constructed on the lot, provided, however, if weather conditions do not permit, then the landscaping shall be completed as soon thereafter as weather conditions permit. For the purpose of the CAMP, substantial completion is defined as the issuance of a Certificate of Occupancy)

1. If any owner fails to undertake and complete his or her landscaping within this time limit, the P.O.A. may, at its option, after giving the owner thirty (30) days written notice, undertake and complete the landscaping of the lot in accordance with the landscaping plan.

2. If the P.O.A. undertakes and completes such landscaping, the cost of such landscaping shall be assessed against the owner's deposit, and if said assessment is in excess of the deposit and is not paid within 30 days after written notice of such assessment from the P.O.A., the P.O.A. may then place a lien on the lot as provided in the Covenants and Restrictions.

SECTION 11. AMENDMENT AND TERMINATION

11.1 Term

Unless terminated, in accordance with this provision, and subject to any limitations set forth in this provision, the CAMP shall continue in full force and effect.

A. **Termination and Modification**. The CAMP, and any provision contained herein, may be terminated, modified or amended as to all or a portion of the CB South Special Area upon approval by the P.O.A. Board and by the BOCC. In addition, the P.O.A. agrees to forthwith provide a copy of any changes, modifications or changes to the Covenants and Restrictions, as approved by the P.O.A., to the Gunnison County Planning Department.

B. **Amendment**. The following process shall apply to an application to amend or terminate the Regulations:

1. **Initiation.** An amendment to the CAMP may be initiated by any of the following:

    a. **P.O.A**. An amendment may be initiated by the P.O.A., or by any CB South Property Owner in good standing, through the submittal of an application to the P.O.A.

2. **Submittal of Draft Amendment Language**. Any initiative or application for amendment shall include at a minimum the following:

    a. **Identification of Applicant**. The applicant's name, address, telephone number and e-mail address.

    b. **Precise Wording**. The precise wording of the proposed amendment, and the Section in which it is proposed to occur.

    c. **Rationale for Proposed Amendment**. A concise statement of the purpose and justification for the proposed amendment.

C. **Approval by BOCC.** Any termination or modification shall be approved by the B.O.C.C.

SECTION 12. MISCELLANEOUS PROVISIONS

12.1 No Liability

The P.O.A. and the DRC shall not be liable for any damage, loss, or prejudice suffered or claimed by any person on account of:

A. The approval or disapproval of any plans, drawings, and/or specifications, whether or not in any way defective;

B. The construction or development of any improvement or performance of any work, whether or not pursuant to approved plans, drawings and/or specifications; or

C. The development of any lot within the CB South Special Area.

12.2 All Owners Bound

Any person who now owns or hereafter purchases or acquires rights in any improvements on any lot shall be bound by the terms and conditions herein, whether or not any reference to CAMP is contained in the instrument by which such person acquired such interest or ownership.

12.3 Destruction of Improvements

In the event any building or other improvement on a lot is damaged or destroyed in whole or in part by any casualty where the valuation of repair is more than 50% of the current property valuation the owner shall, within one-calendar year, immediately undertake to redevelop the property using the most recent standards set forth herein including any amendments hereto; or remove the debris and reclaim the property to a vegetated state. If a building is not destroyed where the valuation of repair is less than 50% of the current property valuation, it shall be restored to a condition in conformity with the plans and specifications most recently approved by the DRC or remove the debris and reclaim the property to a vegetated state.

12.4 Severability

If any part of the CAMP or the development application or enforcement thereof with respect to any person or circumstance is held invalid by a court of competent jurisdiction, the remainder of the CAMP and its application to other persons or circumstances shall not be affected thereby and shall remain in full force and effect.

12.5 No Precedent Set by This Designation

Neither the designation of the CB South Special Area, nor the CAMP, procedures or approvals hereunder shall be construed as a precedent for any other Gunnison County action.

SECTION 13. VIOLATIONS AND ENFORCEMENT

Failure to comply with any provision of the CAMP shall be deemed a violation of the Regulations and the *Gunnison County Land Use Resolution* and shall be subject to enforcement by the applicable authority. To the extent that it has the authority, the Crested Butte South Property Owners Association will pursue enforcement of CAMP as permitted under its governance policies. In absence of said authority, if the Covenants and Restrictions are silent with respect to enforcement or enforcement by the P.O.A. is not occurring, and then enforcement by the County or by law can occur.

13.1 Power

A. The P.O.A. Board shall have the power and duty to hear and make decisions regarding violations and written complaints filed with the Board and impose fines or other sanctions, pursuant to the P.O.A.'s governance policies. The P.O.A. Board may determine enforcement action on a case-by-case basis, and take such actions as it may deem necessary and appropriate to assure compliance with the CAMP, the Covenants and Restrictions, the Association's Articles of Incorporation, Bylaws, and rules and regulations promulgated thereunder and to create a safe and harmonious living environment.

B. These enforcement provisions may be in addition to other specific provisions outlined in the Covenants and Restrictions, Articles of Incorporation, Bylaws or Rules and Regulations and in some cases, the Association is not required to follow these enforcement provisions before seeking such other remedies. The Association may choose a legal remedy or seek assistance from other enforcement authorities, such as police, fire, or animal control, as it deems appropriate.

Crested Butte South Special Area Regulations

61 Teocalli Road, Crested Butte, CO 81224
Phone (970) 349-1162, Website: www.cbsouth.net, Fax (970) 349-1163

Final for P.O.A.
October 22, 2008

This page intentionally left blank.

TABLE OF CONTENTS

Crested Butte South Special Area Regulations 1-1
SECTION 1: PURPOSES 1-1
1.1 Crested Butte South (“Crested Butte South Special Area”) 1-1
1.2 Purpose 1-1
SECTION 2: APPLICABILITY 2-1
SECTION 3: RELATIONSHIP TO THE GUNNISON COUNTY LAND USE RESOLUTION 3-1
3.1 Uses Generally Exempt From Land Use Resolution 3-1
3.2 Definitions 3-1
3.3 Construction and Word Usage 3-1
3.4 Interpretations 3-1
SECTION 4: DEFINITIONS 4-1
SECTION 5: PERMITTED AND PROHIBITED LAND USES 5-1
5.1 Permitted Uses 5-1
5.2 Prohibited Uses 5-3
5.3 Temporary Uses and Structures 5-4
5.4 Special Events 5-4
5.5 Non-Conforming Uses 5-4
SECTION 6: DEVELOPMENT REVIEW PROCESS AND REQUIRED PERMITS 6-1
6.1 Permits and Payment of Fees Required Before Improvements 6-1
6.2 Variance Requests 6-1
6.3 Gunnison County Land Use Change Permit and Building Permit 6-2
6.4 CB South Special Area Permit 6-2
6.5 Standards for Approval 6-9
SECTION 7: DESIGN REVIEW COMMITTEE APPROVAL 7-1
7.1 Required Review and Approval 7-1
7.2 Design Review Committee 7-1
7.3 Review and Action by DRC 7-1
SECTION 8: GENERAL STANDARDS FOR ALL DEVELOPMENTS 8-1
8.1 Building Code 8-1
8.2 Geological Hazard Study 8-1
8.3 Noise and Construction Hours 8-1
8.4 Odors 8-1
8.5 View Obstructions to Motorists 8-1
8.6 Landscaping 8-2
8.7 Stormwater Management 8-4
8.8 Wireless Telecommunication Devices and Structures 8-4
8.9 Mechanical Systems 8-4
8.10 Solid Fuel-Burning Devices 8-5
8.11 Energy Conservation 8-5
8.12 Utility Connections 8-6
8.13 Water Quality and Wetland Areas 8-6
8.14 Wildfire Hazards 8-6
8.15 Wildlife Habitat Areas 8-6

8.16 Ridgelines 8-6
8.17 Snowplowed Access 8-6
8.18 Individual Sewage Disposal Systems (I.S.D.S.) 8-7
SECTION 9: COMMERCIAL AREA DESIGN PRINCIPLES AND STANDARDS 9-1
9.1 Standards are Minimum 9-1
9.2 Commercial Area Goal 9-1
9.3 General Design Principles 9-1
9.4 General Design Requirements 9-3
9.5 Dimensional Standards for Commercially-Designated Lots 9-5
9.6 Minimum Setbacks 9-6
9.7 Maximum Height 9-7
9.8 Minimum Unit Size 9-8
9.9 Facades and Color 9-9
9.10 Building Entrances 9-10
9.11 Roof Forms 9-11
9.12 Two or More Units on One Lot 9-12
9.13 Residential Garages 9-12
9.14 Parking 9-12
9.15 Pedestrian Connections 9-14
9.16 Storage, Loading and Service Areas in the Commercial Area 9-14
9.17 Snow Storage and Snow Staging in Commercial Area 9-17
9.18 Exterior and Interior Lighting in Commercial Area 9-17
9.19 Mailbox Design and Location 9-18
9.20 Commercial Area Signs 9-18
9.21 ADA Accessibility 9-18
SECTION 10: RESIDENTIAL DESIGN STANDARDS 10-1
10.1 Residential Design 10-1
10.2 Driveway Grades 10-1
10.3 CB South Special Area 10-1
10.4 Residential Lots 10-1
10.5 All Proposed Building and Structure Locations 10-1
10.6 Variance Requests 10-1
SECTION 11: BEGINNING AND COMPLETING CONSTRUCTION 11-1
SECTION 12: AMENDMENT AND TERMINATION 12-1
12.1 Term 12-1
SECTION 13: MISCELLANEOUS PROVISIONS 13-1
13.1 No Liability 13-1
13.2 All Owners Bound 13-1
13.3 Destruction of Improvements 13-1
SECTION 14: NO PRECEDENT SET BY THIS DESIGNATION 14-1
SECTION 15: VIOLATIONS AND ENFORCEMENT 15-1
15.1 Power 15-1

Any errors or omissions from this document or the Master Plan should be brought to the attention of CB South P.O.A. as soon as possible at chris@cbsouth.net or call (970) 349-1162.

Note: The drawings contained within these guidelines should not be used for construction.

This page intentionally left blank.

SECTION 1: PURPOSES

1.1 Crested Butte South ("Crested Butte South Special Area")

The Crested Butte South Special Area (the "Crested Butte South Special Area" or "CB South Special Area") has been designated by the Board of County Commissioners of Gunnison County (the "BOCC") pursuant to Section 1-110: PROCESS FOR DESIGNATING SPECIAL AREAS of this *Resolution* (the "LUR") as a Special Area.

1.2 Purpose

These purposes serve as basic goals for these *Regulations* and the review of applications for Crested Butte South Special Area Permits. When there is a conflict between a statement of purpose and an adopted standard in these *Regulations*, or when an adopted standard is more specific, the standard shall supersede these purposes. These *Regulations* shall be liberally construed to further the following purposes.

A. To Simplify LUR Review and Approval.
To simplify the Gunnison County Land Use Resolution review and approval process for real property wholly contained in the Crested Butte South Special Area

B. To Promote a Compact Commercial and Business Development Pattern.
To promote a compact commercial and business development pattern wholly contained in the Crested Butte South Special Area.

C. To Protect the Environment; Public Health, Safety and Welfare; Public Services, Facilities and Property.
To avoid or mitigate potential impacts caused by land development within the CB South Special Area, to the environment, to public services and facilities, property and public safety, and land use within the CB South Special Area and adjacent properties, to the maximum extent feasible.

D. To Provide Opportunity for New and Existing Businesses.
To provide the opportunity for existing businesses to grow and new businesses to locate in close proximity to existing populations, services, utilities and transportation routes.

E. To Encourage Economic Diversity.
To encourage, strengthen and promote greater economic diversity in the County; to broaden employment opportunities and reduce seasonal employment fluctuation in a manner that will not endanger or detract from the existing economy.

This page intentionally left blank.

SECTION 2: APPLICABILITY

These *Regulations* apply to all development, including development of new, expansion of existing uses, and change of the use of land or structures within the CB South Special Area, including any and all commercial uses. The CB South Special Area encompasses Filings 1 through 4 of the Crested Butte South Subdivision, recorded as follows:

Crested Butte South – First Filing, August 21, 1970, Reception Number 280978

Crested Butte South – Second Filing, September 24, 1970, Reception Number 281588

Crested Butte South –Second Filing, Replat of Lots 1-3, and 10-15 all in Block 9, February 21, 1995, Reception Number 458318

Crested Butte South – Second Filing, Corrected Plat, Lot 15, Block 11, June 18, 2002, Reception Number 521255

Crested Butte South – Third Filing, January 4, 1971, Reception Number 282791

Crested Butte South – Fourth Filing, December 1, 1971, Reception Number 291415

Crested Butte South – Fourth Filing , Replat of Lots 4-6, Block 26, May 3, 2005, Reception Number 553180

These *Regulations* are in addition to the Declarations, Covenants and Restrictions, Amendments and Resolutions, and adopted Rules and Guidelines currently in use by the CB South Property Owners Association (P.O.A.), and as may be amended. In the event of any conflict between these *Regulations* and the Declarations, Covenants and Restrictions, Amendments and Resolutions, and adopted Rules and Guidelines in use by the CB South P.O.A., the more restrictive shall apply. Further, it is recognized that any reference to specific sections of the *Gunnison County Land Use Regulation* (LUR) is a reference to the current LUR, understanding that specific sections may change from time to time.

This page intentionally left blank.

SECTION 3: RELATIONSHIP TO THE GUNNISON COUNTY LAND USE RESOLUTION

3.1 Uses Generally Exempt From Land Use Resolution

Development within the CB South Special Area shall be exempt from requirements of the *Gunnison County Land Use Resolution*, unless otherwise specified in these *Regulations*.

3.2 Definitions

Terms not otherwise defined within these *Regulations* shall be defined pursuant to the applicable sections of the *Gunnison County Land Use Resolution*.

3.3 Construction and Word Usage

Construction and word usage shall be interpreted pursuant to the applicable Sections of the *Gunnison County Land Use Resolution.*

3.4 Interpretations

The CB South Association Manager and/or P.O.A. Board of Directors shall have authority to interpret these *Regulations*, and the Board of County Commissioners during an appeal process. A written record of any interpretation shall be kept on file at the P.O.A. Offices.

This page intentionally left blank.

SECTION 4: DEFINITIONS

This Section defines words, terms, and phrases used specifically in these *Regulations.* Terms not otherwise defined within these *Regulations* shall be defined pursuant to the Definitions section of the *Gunnison County Land Use Resolution.*

ADA refers to Americans with Disabilities Act of 1990 that sets forth requirements of accessibility to public and semi-public buildings, as may be amended.

BOARD means the Board of County Commissioners of the County of Gunnison, Colorado, duly authorized to act on behalf of Gunnison County, Colorado.

BOCC means the Board of County Commissioners of the County of Gunnison, Colorado.

BUSINESS DISTRICT means the Commercial Area which is comprised of the Commercial Core and the Commercial Perimeter.

CERTIFICATE OF APPROVAL is a certificate issued by the County Planning Department that states that the proposed project has received compliance review by both the DRC and the Gunnison County Planning Department and the applicant is authorized to apply for the applicable building permit through the County Building Department.

CERTIFICATE OF OCCUPANCY means a certificate issued by Gunnison County that provides proof that the building or structure has been constructed in conformance with the approved building permit plans and all applicable building codes.

COMMERCIAL means any establishment engaged in the retail, and incidental wholesale, of goods or services that is open to the general public or that may be open to members only. This does not include farm or ranch stands. "Commercial" also means "business."

COMMERCIAL AREA encompasses all of Block 6, Lots 5, 7, 9, 11, 13, 15, 17, 41 to 48 inclusive in Block 4; Lots 23 to 40 in Block 5, excluding Lots 32, 33, and 34, all within the 2nd Filing. Lots 32-34 in Block 5 may be included in the Commercial Area at the discretion of the P.O.A. Board only after notification of all immediately adjacent property owners, and at least one properly noticed public hearing.

COMMERCIAL AREA MASTER PLAN (CAMP) refers to the illustrative design that generally depicts the layout and potential development of those commercially-designated lots located in the Crested Butte South Subdivision together with these *Regulation*s (see page 9-15).

COMMERCIAL CORE refers to all of Block 6 in the 2nd Filing. It is expected that the majority of the Commercial Core will be developed with commercial and mixed-use buildings.

COMMERCIAL LOT refers to all commercially designated (Commercial Core or Commercial Perimeter) lots within the CB South Special Area.

COMMERCIAL PERIMETER refers to those portions of Blocks 4 and 5 that front Block 6 in the 2nd Filing, and are commercially-designated, per the CB South Plats; and possibly may include lots 32-34 in Block 5 of the 2nd Filing.

CB SOUTH SPECIAL AREA a.k.a. Crested Butte South Special Area, shall mean all of the real property now or hereafter included in the Crested Butte South Subdivision, Filings 1-4, and subsequent Filings, made subject to these *Regulations*.

CB SOUTH METRO DISTRICT means the Crested Butte South Metropolitan District which provides water and sewer services to Crested Butte South and snowplowing and roadway maintenance services under contract with Gunnison County.

CB SOUTH SPECIAL AREA PERMIT means the required permits issued by the P.O.A. in accordance with these *Regulations*.

DESIGN REVIEW COMMITTEE ("DRC") means the five (5) member Committee (with up to two alternates) established to review and act on plans for improvements on any lot to ensure compliance with these *Regulations*. The Design Review Committee is the Improvement Committee described in Sections 1.01-4 and 2.00 of the Covenants and Restrictions of Crested Butte South recorded in Book 420 at page 404 of the Gunnison County records. The Board shall be composed of at a minimum of one (1) and no more than two (2) Commercial Area lot owners, at least two (2) residential-use-only lot owners, and no more than one P.O.A. Board member, all of whom are appointed by the P.O.A. Board, with each member entitled to one vote on matters coming before the Design Review Committee. A quorum of the Board shall be three (3) members in order to hold a meeting and conduct business. Decisions rendered at meetings where only three (3) members are present must be unanimous. Each member shall serve a two year term, and terms shall be staggered.

DESTROYED shall mean relocated, replaced, structurally altered, or damaged by wind, fire or other cause to the extent that 50 percent or more of their replacement value has been destroyed.

EXISTING GRADE means the original or natural topographic grade of a lot/property prior to any disturbance or grading work has been conducted. Existing grade shall be based on the USGS elevation provided on a wet-stamped survey of a property, by an engineer licensed in the State of Colorado, and completed prior to the date of the application. In the case of non-natural or highly irregular topography due to man-made impacts within the existing site development area, not created by the applicant, an average slope may be used (see below). On any lot/property exhibiting evidence of cut or fill grade not authorized by the P.O.A. the applicant may be required to provide a professional soil analysis to determine the natural grade. No excessive fill, excavation or other artificial methods of grade manipulation will be permitted to create an exaggerated building site to manipulate the building height measurement (see diagram below)

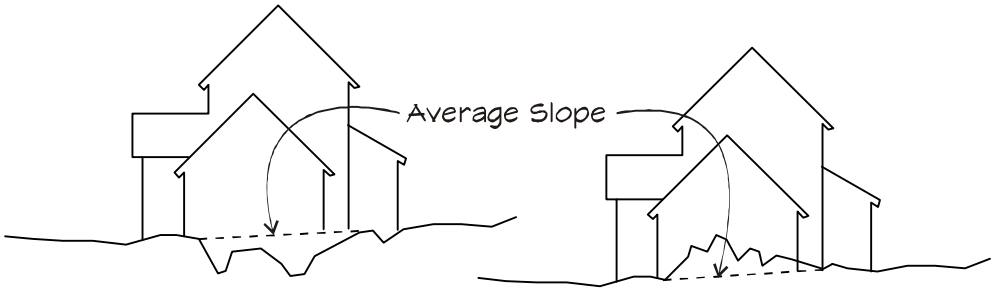

In the case of non-natural or highly irregular topography due to man-made impacts within the existing site development area, an average slope may be used.

FARMER'S MARKET means a market established by an organization of farmers/producers to provide the opportunity for direct sales (by farmers or their representatives) of primarily Colorado-grown produce, with the possibility of accessory sales of other agriculturally-related products, to wholesale or retail buyers at stalls or other similar structures of a temporary nature.

HEIGHT: No portion of any structure (except for chimney elements and elevator shafts) shall exceed a true vertical dimension of the heights prescribed herein, as measured vertically from the existing grade directly below (see diagram below)

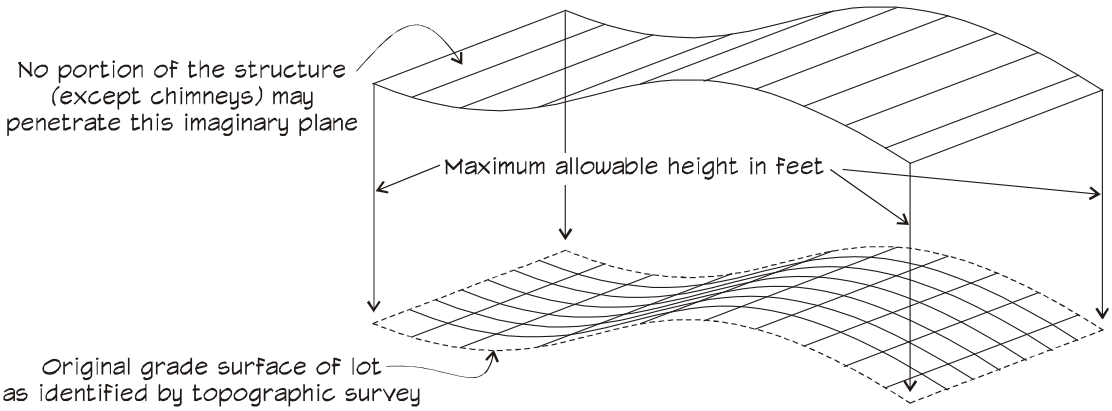

HOME OCCUPATION shall mean a business, occupation or trade conducted wholly within a dwelling, or wholly within a structure accessory to the dwelling. Such home occupation shall be incidental and secondary to the use of the property for residential purposes, and shall not change the residential character of the property, and shall employ on-site no more than one (1) outside, non-family member, who lives off-premises. All home occupations are governed by separate Crested Butte Property Owners Association Regulations.

IMPROVEMENT OR IMPROVEMENTS means an addition to or enhancement of property or its condition, amounting to more than mere repairs or replacement, including, but not limited to, structures, infrastructure, habitat compensation, restoration, reclamation, general landscaping, and such other installations as may be designated by the County.

INCIDENTAL OR ACCESSORY means affiliated with or dependent on the principal use.

LAND USE RESOLUTION (LUR) means the Gunnison County Land Use Resolution, adopted by the Board of County Commissioners of Gunnison County, Colorado on January 8, 2001 (the "effective date" of the *Resolution*), and as amended.

MANUFACTURE means to make or process a raw material into a finished product.

MANUFACTURING USE means a land use where raw materials are brought to the site and created into a finished product through a process, typically using large quantities of materials and industrial machines.

MAXIMUM EXTENT FEASIBLE means that all practical efforts to comply with the *Regulations* or minimize potential harm or adverse impacts have been undertaken and that no feasible and prudent alternative exists. Economic factors may be taken into account but shall not be the overriding or dispositive factor in determining whether no feasible and practical alternative exists in a particular situation.

MIXED USE BUILDING is a commercial structure that has no more than 66% of the square footage allocated to residential uses.

MULTIPLE-FAMILY BUILDING is a residential building with a minimum of three (3) units.

NUISANCE means an activity that arises from the unreasonable, unwarranted or unlawful use of property, working obstruction or injury on the right of another, or on the general public.

PLANNING COMMISSION means the Gunnison County Planning Commission.

PLANNING DEPARTMENT means the Gunnison County Planning Department.

P.O.A. means the Crested Butte South Property Owners Association that is composed of all owners, in good standing, of property in the Crested Butte South Subdivision.

P.O.A. BOARD means the Crested Butte South Property Owners Association Board of Directors that is elected to represent the property owners in Crested Butte South.

P.O.A. MANAGER means the agent or administrator of the Property Owners Association who is hired by and reports to the P.O.A. Board.

PROPERTY shall be synonymous with the CB South Special Area, and shall mean all of the real property now or hereafter made subject to these *Regulations*.

RECORDED OR RECORDATION means, with respect to any document, the recording of said document in the records of the Office of the Gunnison County Clerk and Recorder, Gunnison County, Colorado.

RECYCLING AREA means an enclosed common facility where the recycling of products such as cans, glass, plastic, newspaper, and other similar items can be deposited for pick up by a recycling company. A recycling area must be part of a common trash enclosure as provided for in the Commercial Core.

REGULATIONS means these CB South Special Area Regulations (the "*Regulations*"), created to regulate the development and use of the South Special Area in conjunction with the designation of CB South as a Special Area pursuant to applicable Sections of the *Gunnison County Land Use Resolution.*

SIGN means any attention-getting device used to promote business activity, any placard, poster, billboard, advertising structure or inscribed surface, pattern or artificial lighting, pictorial or symbolic ornament, emblematic structure, banner, fluttering apparatus, or other visually communicative or expressive device that is visible from an out of doors position and is used to advertise or call the public's attention to any public, business, commercial, recreational or any other activity, object for sale or lease, person or place, or to bear any kind of message. A sign includes any surface on which a name, text, device, signal, ornament, logotype, or advertising matter is made visible, but does not include a vehicle on which the name of a business appears. The meaning of "sign" shall also include any sign currently in disuse, but still visible from an out of doors position, and any frame or support structure erected specifically to support a sign.

SIGNIFICANT TREES means those trees with a caliper of 3” or more (measured 4’ above the root ball) for which an applicant is seeking credit as part of residential design review.

SITE DEVELOPMENT PLAN means a scaled drawing that depicts the proposed development on a lot or lots within the CB South Special Area.

SOLID FUEL BURNING DEVICE means a device designed for the combustion of solid fuels including, but not limited to, wood, coal, pulp, paper, pellets or similar non-liquid or non-gaseous materials so that usable heat is derived for the interior of a building, and includes solid-fuel-burning stoves, fireplaces or wood stoves of any nature, combination fuel furnaces or heaters that burn solid fuel, or any other device used for the burning of solid combustible material.

STREET means a dedicated public right-of-way that provides vehicular and pedestrian access to adjacent properties. Street shall include road, lane, place, avenue, drive and similar terms.

VENDING CART means a small vehicle or cart used for the vending of food and goods to the general public. Typically, vending carts are non-motorized and are wheeled to a location outside of a public right-of-way, such as a park or common area.

This page intentionally left blank.

SECTION 5: PERMITTED AND PROHIBITED LAND USES

This Section describes the permitted and prohibited uses of lots in the CB South Special Area, and details how the permitted uses are required to be operated. Any use not specified may be considered on a case-by-case basis by the P.O.A. Board. The P.O.A. Board may require additional mitigation to offset issues, including but not limited to, potential noise, odors, visual, environmental or traffic impacts. In the event that the P.O.A. Board denies the requested use, the applicant can seek relief through the appeal process, as set forth in *B.O.C.C Resolution 2008-38*.

Lots 32-34 in Block 5 may, in the future, be included in the Commercial Area at the discretion of the P.O.A. Board, only after notification of all immediately adjacent property owners, and at least one properly noticed public hearing. Otherwise, in no instance shall platted residential lots located outside of the herein defined Commercial Core or the Commercial Perimeter be converted to a commercial lot.

5.1 Permitted Uses

A. Commercial Lots.

It is the goal of this Special Area Plan that mixed uses (commercial on first floor and residential above) be used to create a vital downtown area. Commercially designated lots shall be used only for the following purposes:

1. **Retail Commercial Establishments**: antiques, appliances, art supplies, galleries, retail bakeries, bike shop, clothing stores, shoe stores, jewelry stores, video stores, bookstores, cameras, candies, tobaccos, florists, food markets, furniture, gifts, hardware, hobby shops, photo shops, print shop, sporting goods, stationery and variety stores, liquor store, and pet shop. These uses shall be located on the first level.

2. **Service Commercial Establishments**: business offices, financial institutions and personal services establishments, including barber and beauty shops, non-commercial laundromats, shoe repair, sewing and tailoring, daycare center (subject to State requirements), animal grooming, studios for instruction in the arts, health clubs, radio and television broadcasting, artist's studio, and catering services. These uses shall be located on the first or second level.

3. **Auto-Related Uses**: fueling and washing vehicles which are provided as a service incidental to a retail store, provided the following conditions are met: a minimum lot area shall be 16,000 S.F., and there is not a similar use within 500-feet, and the fuel dispensing units accommodate no more than four vehicles at any given time. These uses shall be located on the first level.

4. **Assembly Halls**: recreational clubs, theatres, assembly halls, schools, churches, public or civic buildings, and P.O.A. or governmental offices. Assembly halls may require additional off-street parking.

5. **Restaurants**: coffee shop, cocktail lounges or other places serving food and/or alcoholic beverages (excluding drive-in eating places that serve customers in their vehicles, which are prohibited). Restaurants serving alcohol will have limited hours of operation to be determined by the P.O.A. Board. Outdoor dining is encouraged, but outdoor music, outdoor speakers, live music and/or live advertising will require special approval by the P.O.A. Board. These uses shall be located on the first or second level.

6. **Medical and Dental Clinics and Professional Offices**. These uses may be located on the first or second level.

7. **Rental, Repair and Wholesaling Facilities**: These uses are allowed only in conjunction with any of the above uses, provided all activity is clearly incidental and accessory to the permitted uses and wholly conducted within the building. No purely warehousing and storage uses shall be permitted. These uses shall be located on the first level.

8. **Newspaper and Publishing Offices**. These uses shall be located on the first or second level.

9. **Accommodations**: including hotels, motels, and bed and breakfasts (subject to applicable Sections of the *Gunnison County Land Use Resolution*), limited in size to no more than 15,000 S.F., unless approved by the P.O.A. Board.

10. **Parks and Plazas**: should meet the following criteria:

    The parks and plazas should have South-facing orientation;

    Food and beverage service is or can be located nearby;

    The parks and plazas should have water and/or Public Restrooms located within or near them;

    The parks and plazas should be designed as places for activity and events;

    The parks and plazas should be connected by developed and undeveloped paths to and from neighborhoods; and

    Space for playgrounds is provided, where appropriate.

11. **Farmer's Market**. Any market established by an organization of farmers/producers to provide the opportunity for direct sales (by farmers of their representatives) of primarily Colorado-grown produce, with the possibility of accessory sales of other agriculturally-related products, to wholesale or retail buyers at stalls or other similar structures of a temporary nature.

12. **Construction-Oriented Specialty Uses:** paint store, tile/flooring store, locksmith, shop-craft industry, household appliance repair shop, garden shops,

fabric and sewing supplies, provided all uses are conducted within the building (except garden shops), and provided a storefront is utilized, maintained and accessible to the general public. These uses shall be located on the first level.

13. **Propane Refilling Station**: as a use incidental to a primary business use that provides new tanks and the re-filling of propane tanks for residential applications. These uses must be located on the first level and shall be screened from view.

14. **Residential Units**.

    Commercial Core: must be located on the second level or higher, comprising not more than 2/3 of the total floor area of a mixed use building.

    Commercial Perimeter: single-family, duplex and multi-family buildings are allowed as well as mixed-use buildings.

15. **Home Occupations**: shall be allowed in the CB South Special Area in accordance with the Crested Butte South Home Occupation Regulations.

16. **Wireless Communications Facilities**: provided they are installed on public or quasi-public lands such as fire stations, P.O.A. offices, etc.

17. **Outdoor Commercial Vending/Vending Carts**: Shall be permitted in accordance with CB South regulations.

A. Residential lots.

Any residential lot within the CB South Special Area shall be used only for the following purposes:

1. **Single Family and Duplex Uses**.

2. **Multi-Family Uses**, subject to change of use approval. Multi-family Uses shall only be allowed in Filing's 1 and 2, subject to Section 5.1.A.14 above.

3. **Home Occupations**: shall be allowed in the CB South Special Area in accordance with the Crested Butte South Home Occupation Regulations.

5.2 Prohibited Uses

The following uses and operations are prohibited:

A. Manufacturing Uses. Any land use where raw materials are brought to the site and created into a finished product through a process, typically using large quantities of materials and industrial machines.

B. Propane Tanks. Propane tanks that support a building's mechanical system shall not be permitted.

C. Water Wells. Any drilling for water except as permitted by the CB South Metro District.

D. Adult-Oriented Businesses. Adult-oriented businesses shall not be allowed within 1,000 feet of any of the following uses: a residence; a public park or playground; recreational facility; child care center; place of worship or assembly; or a school.

5.3 Temporary Uses and Structures

All temporary uses and structures, including temporary greenhouses, shall be considered on a case-by-case basis.

5.4 Special Events

All special events shall be subject to application fees, review, and approval by the Gunnison County regulations as set forth by the applicable sections of the *Gunnison County Land Use Resolution*, until such time as the CB South P.O.A. adopts their own Special Event Regulations which shall be acknowledged by the B.O.C.C.

5.5 Non-Conforming Uses

All non-conforming uses shall be subject to the applicable Section(s) of the *Gunnison County Land Use Resolution*.

SECTION 6: DEVELOPMENT REVIEW PROCESS AND REQUIRED PERMITS

6.1 Permits and Payment of Fees Required Before Improvements

No improvements shall be commenced, erected, placed, or altered, on any lot by any owner or developer until the following have been obtained:

A. Payment of all Crested Butte South P.O.A. Fees. All Crested Butte South P.O.A. associated fees have been paid.

B. Final Plans Approved by DRC. Final plans have been submitted to and approved in writing by the DRC.

C. Payment of all County Taxes and Fees. All real property taxes and other County fees have been paid.

D. CB South Special Area Permit. A CB South Special Area Permit has been issued by the P.O.A. Manager, pursuant to Section 6.4.

E. Gunnison County Administrative Land Use Change Permit and Building Permit. An Administrative Land Use Change Permit and, as applicable, a Building Permit have been issued by Gunnison County, pursuant to Section 6.3 of these *Regulations*.

6.2 Variance Requests

Variances from the dimensional standards listed pursuant to Section 8: *General Standards for All Development*, Section 9: *Commercial Area Design Principles and Standards* and Section 10: *Residential Design Standards* of these *Regulations* may be issued by the P.O.A. subject to the following conditions. Variances for lots located in all Filings will be heard by the P.O.A. Board in accordance with the process set forth below and do not require an additional hearing by the Gunnison County Board of Adjustments. Variance requests can be processed concurrently with the Special Area Permit application. Variances may be granted from dimensional standards, but not for any change in land use. All decisions shall be in writing, and shall be recorded by the P.O.A. in the Gunnison County Clerk and Recorder's office, at the applicant's expense.

A. Consideration of Variance. The P.O.A. Board will hold a Public Hearing that is properly noticed per Section 6: *Review Process* of these *Regulations*. The P.O.A. Board shall make the following findings of fact and will have the final authority to grant variances when all of the following have been met:

1. There are special circumstances or conditions applying to the land, buildings, topography, vegetation or other matters on the subject lot which would substantially restrict the effectiveness of the development in question; provided, however, that such special circumstances or conditions are unique to the particular

lot/property for which the applicant desires a variance and do not apply generally to all uses.

2. That such special circumstances were not created by the applicant.

3. That the granting of the variance will be in general harmony with the purposes of the CB South Rules and Regulations, and these *Regulations* will not be materially detrimental to the persons residing or working in the vicinity, to adjacent property, to the neighborhood, or to the public welfare in general.

4. The variance applied for does not depart from the provisions of the CB South Rules and Regulations any more than is required to accommodate the unique aspect(s) of the lot/property.

B. **Granting of Variance**. The P.O.A. Board may grant a variance so as to relieve those difficulties or hardship(s) as based on the findings of fact.

6.3 Gunnison County Land Use Change Permit and Building Permit

A development that has obtained a Crested Butte South Special Area Permit in compliance with these *Regulations* shall be required to secure a Land Use Change Permit and, as applicable, a Building Permit from Gunnison County. Such development shall be classified, reviewed and permitted at no higher impact classification than as an *Administrative Review Project That Requires a Land Use Change Permit*, pursuant to the applicable sections of the *Gunnison County Land Use Resolution*, except that no additional County noticing requirements are needed.

A. **County Permit Application not Complete without CB South Special Area Permit.** No application for a Gunnison County Land Use Change Permit nor a Building Permit shall be accepted as complete by Gunnison County without an approved Crested Butte South Special Area Permit.

6.4 CB South Special Area Permit

A CB South Special Area Permit is required before any improvements can be made to a lot. The CB South Special Area Permit indicates that a development project is in compliance with these *Regulations*. An application for a CB South Special Area Permit shall be processed as follows:

A. **Permit Application**. The P.O.A. shall provide the applicable form for a CB South Special Area Permit. The following information and materials are required:

1. **Applicant**. The name, address, telephone and fax numbers, and e-mail address for the owner and agent. If the owner is to be represented by an agent, a notarized letter signed by the owner indicating that they are the owner of record and are authorizing the agent to represent the owner shall be provided. A copy of the recorded deed showing title vested in the applicant shall also be provided.

2. **Survey**. A legal survey stamped by a licensed Colorado surveyor/engineer that includes the following:

A survey map or improvement location certificate showing existing structures (if any), irrigation ditches and other wetlands, water courses, utility and other easements, rights-of-way, fences, significant trees and other similar improvements;

Actual placement of property corner pins or caps on the site;

Lot size shown in both acres and square feet; and

Two foot (2') existing contour lines tied into an established USGS control point. This contour interval requirement may be waived by the P.O.A. Manager if in his/her judgment the information is not necessary in the review of the project.

3. **Legal Description and Address**. The legal description and physical/street address of the proposed development.

4. **Project Description**. A detailed written description of what the applicant wants to do on or to the lot, including:

Residential Uses (if any). Single Family or Duplex uses and additions.

Business or Commercial Operation. A description of the proposed business or commercial use.

Change of Use. A description of the proposed change in use.

Number of Employees. Number of employees anticipated for the operation.

Hours of Operation. The hours of daily operation, and the days of the week in which the business or commercial use is proposed to be conducted.

Construction. The amount of square footage proposed for the structures, and the types of materials to be used in the structures.

Phases. If a business or commercial operation or a multi-family building is proposed to be developed in phases, an identification of the phases and what activities are proposed to be included in each.

P.O.A. Administrative Review. If a project cannot provide specific information regarding the nature of the business, then the future tenant will be required to meet with the P.O.A. Manager and provide the specifics of their proposed business operation for a P.O.A. Administrative review and approval of the project details, including but not limited to parking, signage, hours of operation, etc.

5. **Architectural Elevations, Roof & Floor Plans**. Architectural plans and elevations for all sides of the proposed structure at a minimum scale of 1/8"=1'

(1/4" = 1' scale is preferred). All plans and elevations shall include decks, patios, fences, retaining walls, room labels and dimensions, and make and model of all solid fuel burning devices, if applicable. Architectural elevations including both existing, and approximate proposed grade lines, finished floor elevations, top of slab elevations, all exterior finishes labeled, roof pitch labeled, USGS Height (as measured from the USGS topographic reference from the site survey) on all roof ridges, typical overhang dimensioned and labeled, overall height and direction.

6. **Architectural Perspective**. This shall be drawn from the main public view of the proposed structure. This can also be a scale model or photographs (including photo-simulation). This requirement may be waived by the P.O.A. Manager if in his/her judgment the information is not necessary in the review of the project.

7. **Building cross sections**.

8. **Color samples of all proposed exterior materials.**

9. **Site Development Plan**. A Site Development Plan which shall include a scaled (written and graphic, a minimum scale of 1 inch = 20 feet; preferably 1 inch = 10 feet) drawing of the subject lot and all immediately adjacent lots and their uses per the survey dimensions, site grading, the nature, kind, shape, composition and locations of all existing and proposed structures; adequate and functional snow storage areas, boundary lines and front, rear and side setback lines of the lot, a construction staging plan, and the following:

   Utilities. Locations of all existing and proposed utilities to serve the lot, including water, sewer, electric, gas, phone, fiber optic and cable lines, and temporary sanitary facilities for construction personnel.

   Parking and Driveways. The number, surface type, and location of all existing and proposed parking spaces, driveways, and snowmelt systems on the lot.

   Sign Locations and Designs. A plan for the location of and renditions of all sign designs, in compliance with these *Regulations*, as applicable. Alternatively, sign review can occur later in the process, via an P.O.A. Administrative review with the P.O.A. Manager.

10. **Exterior Lighting Plan**. An exterior lighting plan, pursuant to the applicable requirements of Section 9.18 *Commercial Area Design Principles and Standards* or the Land Use Resolution for residential lighting standards.

11. **Drainage Plan**. A drainage plan for the lot, depicting existing and proposed drainage patterns on and adjacent to the lot. The lot's drainage system shall be designed by a registered professional engineer licensed in the State of Colorado, according to generally accepted storm drainage best management practices and

pursuant to Section 8 *General Design Standards* and all other applicable County, State and Federal regulations.

12. **Landscaping Plan**. A landscaping plan, pursuant to Section 8 *General Design Standards* for commercial lots and pursuant to the Crested Butte South Residential Design Guidelines for residential lots.

13. **Water Supply and Wastewater Treatment**. Verification from the CB South Metro District of its intent to provide services, such as a signed agreement or contract between the applicant and the Metro District indicating that it has the capacity and is willing to provide the amount of water that will be needed for the proposed use.

14. **Fees**. A performance deposit and application fee will be required as set forth by the P.O.A. Board (for specific fee schedules, please refer to the CB South Architectural Review Application). Performance Deposit payment shall be made prior to the P.O.A. Special Area Permit being issued.

    The application fee is a non-refundable fee that is used in the review, administration, and enforcement of CB South Special Area Permits.

    The performance deposit will be refunded by the P.O.A. when the construction or alteration has been completed in strict compliance with all plans, specifications and representations and the site has been cleared of all construction materials, debris, equipment and other unsightly objects. No performance deposit will be refunded by the P.O.A. unless all construction and clean up has been completed within six (6) months of the issuance of a Certificate of Completion and the request for refund has been made in writing.

    No performance deposit for landscaping will be refunded by the P.O.A. until two full growing seasons have expired.

    Any fees charged for the review of the project by other agencies or professionals as set forth herein, shall be the responsibility of the applicant. No Special Area permit will be issued until all fees are paid.

B. **Review Process**. The following review process shall apply to all CB South Special Area Permits:

1. **Submittal of Application**. The applicant shall submit to the P.O.A. a complete application as required by these *Regulations*.

2. **Determination of Completeness**. The P.O.A. Manager shall determine whether the application is complete and includes all information required by these *Regulations*. It is the goal, but not the requirement of these *Regulations* that this review be completed within 30 days of the submittal of the application.

Application is not Complete. If the application is not complete, the P.O.A. Manager shall inform the applicant of the specific deficiencies in writing by mail, fax, or e-mail and shall take no further action on the application until the deficiencies are remedied.

Failure to Correct Constitutes Withdrawal. If the applicant fails to correct the deficiencies within sixty (60) days of the date of the notification that the application was incomplete, the application shall be considered withdrawn.

3. **Application is Complete. If appropriate,** the P.O.A. Manager shall certify it as complete. A determination that an application is complete shall not constitute a determination that it complies with the applicable standards of these *Regulations*.

4. **Request for Review by DRC**. The P.O.A. Manager shall refer the complete application to the DRC, which shall complete its review pursuant to Section 7: *Design Review*.

5. **Request for Review by Other Agencies or Departments**. At the same time the Permit is being referred to the DRC, the P.O.A. Manager may request the professional analysis and recommendations of any other review agency, organization, or technical consultant deemed appropriate and necessary to complete the review, including County offices and departments, State, or Federal agencies having an interest in or authority over all or part of the proposal, utility companies, the applicable school district and special service districts serving the proposed development, and engineers, designers, planners, and legal consultants. In all cases where water and sewer service are required, or when landscaping, sidewalks, and lighting will be proposed within the public right-of-way, then review and approval by the CB South Metro District will be required prior to issuance of a CB South Special Area Permit. In addition, all development shall be subject to review and approval by the Crested Butte Fire Protection District. Any fees associated with these additional reviews must be paid by the applicant prior to consideration of the submittal of the Special Area Permit.

Review and Comment by Review Agencies. The review agencies that are sent a copy of the application shall be requested to make comments within 14 days of mailing by the P.O.A. Manager, unless an extension of not more than 14 days has been requested by the agency before the 14th. The P.O.A. Manager may grant such a reasonable extension if he/she determines that good cause for the delay has been shown. The failure of any agency to respond within 14 ays or within the period of extension shall be deemed no objection of the application by the agency.

Review of Agency / Department Comments by Applicant. The applicant shall have the right to review the comments and recommendations received from the review agencies. The applicant may submit additional information and make changes in the development proposal to respond to the comments of the review agencies; provided, however, that if those changes are substantial or if they significantly alter the nature, character or extent of the application, the DRC may, after the changes, refer the application again to some or all review agencies to obtain additional comments, and may reasonably extend the period of their review accordingly. In addition, the DRC may require a new application fee if the changes are substantial to cover the costs of re-processing the project.

6. **Notice to Public of Proposed Design Review**. At least fourteen (14) days prior to a design review, notice shall be given to the public that a Design Review for a Special Area Permit has been scheduled by posting of the property (commercial and residential) and by notice within a legal newspaper of general circulation serving the subdivision, identifying a 14-day public comment period, during which comments may be submitted in writing to the DRC.

7. **Notice to Public of Variance Requests or Proposed Multi-Family Residences of Three or More Units**. Any variance request or change in use from a vacant lot, single-family, or duplex residential use to multi-family residences of three (3) or more units requires a public hearing before the P.O.A. Board. Notice shall be given to the public by posting of the property; by certified letter sent to all immediately adjacent property owners, including those property owners located immediately across a street; and by notice within a legal newspaper of general circulation serving the subdivision, identifying a 14-day public comment period, during which comments may be submitted in writing to the P.O.A. Approval from the P.O.A. Board must be received prior to any DRC review of the project.

8. **Action by the DRC and P.O.A. Manager**. Within 14 days of having received comments from review agencies, and, as applicable, the applicant has reasonably responded to those comments, the P.O.A. Manager shall schedule a DRC meeting to review the project. Upon completion of their review, the DRC shall approve, approve with conditions, or deny the application, based upon the compliance of the application with the applicable standards and requirements of these *Regulations*, setting forth in writing the reasons for their decision. Conditions of approval shall include the applicant(s) obtaining and complying with all applicable Federal, State, County and other permits required for the project.

DRC approval is valid for only twelve (12) months.

An extension of the DRC approval for up to an additional twelve (12) months shall require a written request to the P.O.A. Manager a

minimum of thirty (30) days prior to the expiration of the DRC approval. The P.O.A. Manager shall determine whether the project will be subject to a new review by the DRC Consideration for extensions will include, but not be limited to, whether the CB South architectural guidelines have been changed since the original date of plan approval.

Any extension request shall be accompanied by a new design review fee which is not refundable.

9. **Recordation of Certificate of Approval & Proof of Building Permit Issuance**. Application can be made to the Gunnison County Planning Department for a Land Use Change Permit and building permit as soon as the CB South Permit is approved.

   Within five (5) business days of issuance of a building permit by the County, the applicant shall provide a copy of said building permit to the P.O.A. as notice that construction may begin. Any recordation fees shall be paid by the applicant.

10. **Appeal.** A decision by the P.O.A. Manager or DRC on a CB South Special Area Permit application may be appealed by referral to the P.O.A. Board.

    Written Appeal. An appeal by the applicant or any CB South property owner may be submitted to the P.O.A. Manager no more than fourteen days (14) after the date which the decision-making body issues its final decision on the application; that time for submittal shall not include the day on which the decision was made. The complete appeal shall be submitted in writing, stating the basis for the appeal and the relief that is requested, and shall include materials to support the appeal. The appeal shall become part of the record.

    Board Consideration of Appeal. The appeal shall be considered by the P.O.A. Board at a regularly scheduled meeting within 30 days after the date the written appeal was filed. In the event that a P.O.A. Board member acted as a DRC member during the review of the project subject to the appeal, then said P.O.A. Board member shall excuse themselves from the P.O.A. Board during the appeal meeting and deliberations.

    Notice of Meeting. The P.O.A. shall, by notice within a legal newspaper of general circulation serving the subdivision, and by first-class mail, inform the applicant, the appellant, and, if a public hearing was part of the original review process on the application for which an appeal of action has been filed, anyone who testified at the public hearing or submitted written comments on the application. The notice shall include the date, time, and place of the public meeting.

Board Decision. The P.O.A. Board shall affirm, affirm with modifications, or reverse the original action in writing, setting forth its reason for the decision.

11. **Modification or Reversal of Original Action.** The original action shall only be modified or reversed if the appellant establishes, by a preponderance of the evidence based on the record of the review body, that:

    No Credible Evidence. There is no credible evidence in the record to support the original decision; and/or

    Original Action Inconsistent with these *Regulations*. The original action was inconsistent with the applicable requirements of this regulation or other regulating documentation; or

    Review Body Action Inappropriate. The review body exceeded its jurisdiction or abused its discretion.

12. **Board Decision shall be Final.** However, the P.O.A. Board's decision may be appealed To the Gunnison County Planning Department.

13. **Occupancy.** In no instance shall occupancy be allowed in CB South prior to the final/official issuance of the Certificate of Occupancy by the Gunnison County Building Department.

6.5 Standards for Approval

An application for a CB South Special Area Permit shall comply with the following standards:

A. Compliance with These *Regulations*. The use shall comply with all applicable standards and provisions of these *Regulations* and the governing documents of Crested Butte South.

B. Compatibility with Community Character. The proposed land use shall be both architecturally and functionally compatible with, or an enhancement of, the character of existing land uses in the Special Area, and it shall avoid excessive similarity and dissimilarity with existing structures, and they shall not subject other uses to undue noise, dust, fumes, odor, explosion, aircraft flight patterns, or other hazards or nuisances, whether the result of design, location, basic character, or of planned or reasonably expected growth.

C. No Significant Net Adverse Impacts Offsite. The proposed land use shall not create significant net adverse impact, including but not limited to: changes to existing water quality, air quality in the impact area, soils and geologic conditions within the impact area, existing land uses, public services and facilities, and government expenditures, public roads and their uses, including hours during which vehicles related to the project will be operating, impacts on adjoining or other affected lands in the impact area, visual impacts, and the amount of surface acreage disturbed and its location.

This page intentionally left blank.

SECTION 7: DESIGN REVIEW COMMITTEE APPROVAL

7.1 Required Review and Approval

No improvements shall be commenced, erected, placed, altered, or maintained on any lot by any owner or occupant until the use has received a CB South Special Area Permit, and plans and specifications have been submitted to and approved in writing by the Design Review Committee (DRC), and, as applicable, a Building Permit is issued by Gunnison County.

7.2 Design Review Committee

The Design Review Committee (DRC) is a five (5) person Committee (with 2 alternates) that is authorized to review and act on permit applications and plans for improvements within the CB South Special Area to ensure plan compliance with these *Regulations*. The DRC shall be composed of, at a minimum, one (1) and no more than two (2) Commercial Area lot owners, at least two (2) residential lot owners, and no more than one P.O.A. Board member, all of whom are appointed by the P.O.A. Board.

7.3 Review and Action by DRC

The DRC may deny or approve the plan as submitted, as altered or amended, or subject to specific conditions, as set forth in their findings.

A. Denial. The DRC shall have the right to deny the plan on any reasonable grounds including, but not limited to, the following:

1. **Non-Compliance with These *Regulations***. Failure to comply with any of the restrictions set forth in these *Regulations* or any other applicable regulatory document.

2. **Incomplete Information**. Failure to include required information in the plans and specifications as required by these *Regulations*, or as reasonably requested by the DRC.

3. **Exterior Appearance**. Objection to the exterior design, the appearance of materials or the types of materials employed in the proposed structure, or objection to the color scheme, finish, proportions, or style of architecture of any structure, or conflicts with these *Regulations* and/or the *Crested Butte South Residential Design Guidelines.*

4. **Incompatibility with Other CB South Special Area Uses and Density**. Objection on the grounds of incompatibility of any proposed structure, use, or density with existing structures or uses upon other adjacent lots.

5. **Incompatibility**. Any other matter which, in the judgment of the DRC, would render the proposed improvements incompatible with any CB South rule or

regulation, including the Commercial Area Master Plan, or any other general plan for improvements within the CB South Special Area.

B. Approval. The DRC shall base its decision, among other factors, upon the compliance with criteria found within in these *Regulations* as well as other CB South regulations, including but not limited to: compliance with site dimensions, adequacy of structural design, conformity and harmony of external design with neighboring structures, location and use of proposed improvements upon adjacent lots, proper facing of the main elevation with respect to nearby streets, adequacy of screening of mechanical, air conditioning and other rooftop installations, and conformity of the plans and specifications to the purpose and intent of these *Regulations*.

1. **Final Plans**. The applicant shall submit three (3) complete sets of the final approved plans, modified per the direction of the DRC at their meeting.

2. **Filing of Approved Plans**. Upon approval or conditional approval by the DRC a copy of the approved plans and the DRC decision shall be deposited for permanent record with the DRC, and filed by the P.O.A. Manager. The second set and copy of the Special Area Permit shall be filed with Gunnison County as part of the Building permit set. The third set shall remain on-site during construction.

SECTION 8: GENERAL STANDARDS FOR ALL DEVELOPMENTS

This Section establishes the general standards required of all development by which applications for CB South Special Area Permits will be reviewed for development within the CB South Special Area. These standards are intended to enhance and protect the health, safety and welfare of the Special Area to the maximum extent feasible.

8.1 Building Code

All buildings and structures proposed to be built in the CB South Special Area must meet all applicable building codes adopted and amended by Gunnison County.

8.2 Geological Hazard Study

A comprehensive geologic hazard study was conducted by Fox & Associates, Inc, on December 5, 1980, entitled "Subsoil and Engineering Geology Investigation, Crested Butte South Subdivision, Filings 1 through 4". Due to landslide and potentially unstable slopes being present within Filings 2, 3, and 4, the report recommended that individual site specific studies be performed to evaluate the local geology, potential construction, road cuts and provide recommendations to minimize problems. As part of the building permit submittal, the County may require area assessments on each individual lot/property located within a geological hazard area, as mapped by the Colorado Geological Survey. It shall be the policy of the P.O.A. to inform contractors/builders/residents/owners if their particular lot will likely require such a study in the design review process. Further, development in areas subject to geologic hazards shall be subject to the applicable requirements of the *Gunnison County Land Use Resolution.*

8.3 Noise and Construction Hours

Every use in the CB South Special Area must comply with the *Noise Guidelines for Crested Butte South* such that any noise produced is not objectionable because of intermittence, beat frequency, or shrillness regardless of dba measurement.

8.4 Odors

No use shall cause or allow the emission of odors from any single source so as to result in detectable and unreasonable odors, as determined by state statutes. Ventilation and control of odor and fumes may be required by the DRC.

8.5 View Obstructions to Motorists

The DRC shall have the authority, but not the obligation, to remove, relocate or require the removal or relocation of any retaining wall, earthen berm, bank, hedge, shrub, bush, tree or other improvement, natural or artificial, placed or located on any lot if the location of the object will, in the determination of the DRC, obstruct the vision of a motorist upon any of the streets within or providing access to the CB South Special Area. Any such removal or relocation will be done at the Owner's expense.

8.6 Landscaping

A. General Landscaping Requirements. (Refer to the *Crested Butte South Residential Design Guidelines* for more specific requirements for residential lots).

1. Drought tolerant and native species shall be used wherever possible.

2. Native wildflowers shall be used to create seasonal color and interest in key locations.

3. Evergreens shall be used sparingly, and only in appropriate places where they have plenty of room to grow.

4. Natural irrigation in the form of ditches and drip irrigation is encouraged while other irrigation shall be limited.

B. Landscaping Plan Requirements. Applicants shall prepare a landscaping plan that shall indicate the type and location of vegetation to be included on the site. The plan shall also contain a planting schedule (a table that indicates species, size, and quantity) and a plan for maintenance of all landscaping to be installed. After disturbing any soil on any lot within the CB South Special Area, all lots shall be kept weed free, in accordance with the CB South Covenants and State of Colorado statutes. All street trees shall be a minimum of 3” caliper as measured 4’ from the top of the root ball.

1. All commercial lots shall provide, and maintain in good health, a minimum of two (2) street trees, 25’ on center in the front landscaping strip. In the event that the DRC finds that it is impractical or a hardship to provide the required trees, then they may request cash-in-lieu of the trees. The cash-in-lieu amount shall be determined by the P.O.A. Board and modified from time-to-time.

2. In addition to the required landscaping set forth in the *Crested Butte South Residential Design Guidelines,* the following shall be provided in all parking areas to reduce heat and break up impervious surfaces: one (1) tree (min. 3” caliper measured 4’ above the top of root ball) planted for every five parking spaces.

3. At least one tree and three shrubs (min. 5 gallon size) shall be provided per each 500 square feet of the area that is shown as being open on the landscaping plan. All landscape planting areas that are not dedicated to trees or shrubs shall be landscaped with native grass, ground cover, or other appropriate landscape treatment.

4. No material or temporary soil stockpiling shall be placed within four feet (4’) of existing shrubs or in the drip line of trees. During construction, temporary protective barriers or tree wells shall be installed around each tree, plant and/or group of plants that are to remain on site. Protective barriers shall be of a durable

material that will last until construction is completed. Snow fences and silt fences are examples of acceptable barriers.

5. All dead or dying trees shall be removed from the site, unless those trees are to be retained for wildlife habitat, upon the recommendation of the Colorado Division of Wildlife or the Colorado State Forest Service. If trees and limbs are reduced to chips, they may be used as mulch in landscaped areas.

6. To avoid landscape materials from blocking driver sight distances, no material greater than thirty inches (30”) in height shall be located within fifteen feet (15’) of a driveway or road edge.

7. All landscaping design shall provide adequate space for snow plowing and areas for snow storage (33% or driveway and parking areas), that shall be indicated on the landscaping plan. See Section 9.17 for snow storage requirements.

C. Site Protection.

1. Topsoil moved during construction shall be stockpiled and redistributed on all re-graded surfaces in order to provide an even cover to all disturbed areas of the lot. Such surfaces shall be stabilized by seeding or planting.

2. All stumps, other tree parts, litter, brush, weeds, excess or scrap construction materials, and other debris shall be removed from the site within six months of the issuance of a Certificate of Occupancy and properly disposed of.

3. Landscaping of all cuts and fills and/or terraces shall be sufficient to prevent erosion. All roadway slopes steeper than one foot vertical to three feet horizontal (1:3) shall be planted with ground cover appropriate for soil conditions, water availability, and the immediate environment.

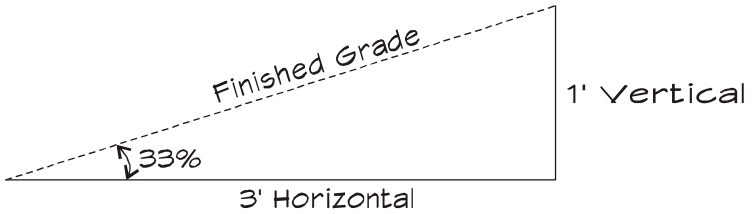

4. No excavation of any lot shall be made except in connection with construction of an improvement approved by the DRC, and upon completion, exposed openings shall be back-filled and disturbed ground shall be graded, leveled and restored to its original condition, or planted with landscaping material as provided herein.

D. Planting Specifications. Deciduous trees shall have at least a three (3) inch caliper (measured 4’ from top of root ball) at planting. Sizes of evergreens and shrubs shall be allowed to vary depending upon the characteristics of use and their location and the types of shrubs proposed, but as a minimum shall be six feet (6’) in height to ensure

good health. Trees shall be staked upon planting and provision made by the owner for regular watering and maintenance until they are established. Dead and dying plants shall be replaced by the owner no later than the following growing season.

E. **Timing**. All landscaping shall be installed no later than one growing season after substantial completion of construction on the lot. In no case will the portion of the performance deposit for landscaping installation be refunded until all required landscaping is installed and has survived at least two growing seasons.

8.7 Stormwater Management

There shall be no construction of ponds except as may be necessary for use as water detention or retention areas, and all such ponds shall be constructed according to an approved site development plan approved by a licensed engineer in the State of Colorado. All development in areas subject to flood hazards shall be subject to all applicable sections of the *Gunnison County Land Use Regulations*. Wherever possible, aesthetically-pleasing wetlands shall be created to improve water quality and to slow water down and filter it before leaving the site. The applicant shall provide the following:

A. **Drainage Study**. In addition to the drainage plan, a drainage study may be required for projects in excess of 10,000 S.F. of created impervious surface area. Such study, if required, shall be subject to review and approval by the Gunnison County Public Works Department.

B. **Runoff Control Structures**. The owner shall provide storm sewers, culverts and other runoff control structures as indicated on the drainage plan or determined necessary by the drainage study. Such structures shall be included in a designated easement, if required by Gunnison County.

C. **Historic Runoff**. The drainage system shall be designed and constructed so that only historic runoff, not including historic irrigation, shall be released from the site. Drainage flows in excess of this amount shall be retained, detained or handled in an on-site system. All costs associated with handling runoff generated by a development shall be paid for by the owner of the development.

8.8 Wireless Telecommunication Devices and Structures

Installation of wireless telecommunication devices and structures within the CB South Special Area shall be required to comply with the requirements of the *Gunnison County Land Use Resolution* current at the time the applicant applies for a CB South Special Area Permit.

8.9 Mechanical Systems

Mechanical systems must be screened from public view. No mechanical systems shall be the prominent feature on any roof line as viewed from public rights of way. Additionally, all mechanical systems and building protrusions shall be painted a dark color or similar color to the surface thru which they protrude.

8.10 Solid Fuel-Burning Devices

A. No solid-fuel-burning device shall be installed within any structure or building or on any property unless such device is an approved solid fuel burning device, as certified to meet the E.P.A. Phase II Rated particulate emissions rate standard by the United States Environmental Protection Agency (E.P.A.), or any subsequent standard established by the E.P.A., or is certified to meet those standards by a testing laboratory accredited by the E.P.A., or is approved by the Colorado Air Quality Control Commission.

B. The maximum number of devices allowed shall be as follows:

1. **Single Family Residence**. Any single family residential structure, including detached condominiums and townhouses not in multiple-family buildings, and manufactured/mobile homes for which a Building or Manufactured Home permit is issued after the effective date of the *Gunnison County Land Use Resolution* shall be allowed to install one approved solid-fuel-burning devices per single family residence. An integrated secondary residence does not qualify for devices in addition to those identified above for the primary residence. Further, each half of a duplex does qualify for a single device.

2. **Multiple-Family Residences, Hotels, Commercial and Institutional Buildings**. No solid-fuel-burning device shall be allowed in individual units of multiple-family buildings, hotel/motel units, commercial or industrial buildings, except that one approved solid-fuel-burning devices may be installed per building.

3. **Any solid-fuel-burning device** shall be installed pursuant to the standards and specifications defined by the manufacturer of that device, or shall meet the clearances specified in the Uniform Mechanical Code or subsequent applicable code adopted by Gunnison County.

8.11 Energy Conservation

Before beginning any project, property owners are encouraged to talk with local resources on energy efficiency for a better understanding of the latest technologies and potential energy savings and/or tax rebates on energy systems.

A. Passive solar designs are encouraged. New buildings placement should make every effort to be considerate of existing and future solar access on adjacent properties.

B. Appropriate ventilation shall be utilized in all designs.

C. Day-lighting shall be used to minimize the need for energy-consuming lights.

D. Renewable energy sources are strongly encouraged.

E. R-Values in excess of the current Building code requirements are strongly encouraged.

F. Consideration shall be given to where shading will occur in the design of structures as this will be where snow accumulates in winter.

8.12 Utility Connections

All utility connections, including all electrical, cable, fiber optic and telephone connections and installation of wires to buildings, shall be placed underground from the nearest available power source. No transformer, electric, gas or other meter of any type, or other apparatus, shall be located on any power pole nor hung on the outside of any building, but shall be placed on or below the surface of the ground and where placed on the surface, shall be adequately screened, fenced or protected and all installations shall be subject to the prior approval of the DRC. Additionally, all meters and pipes near or on a structure, exclusive of the glass areas, shall be painted a dark color or similar color to the surface that they are closest to in order to blend with their surroundings.

8.13 Water Quality and Wetland Areas

Development in areas identified as wetland areas or areas that may impact quantity, quality or dependability of water resources shall be subject to the applicable sections of the *Gunnison County Land Use Regulations*.

8.14 Wildfire Hazards

Development shall be subject to the most current and applicable sections of the *Gunnison County Land Use Regulations*. Additionally, property Owners are encouraged to review their plans with the Crested Butte Fire Protection District before submitting to the DRC. All properties should consider the mitigation recommendations (defensible space) for areas outside of hazard areas as delineated in the "*Colorado State Forest Service's protect your home from wildfire - it's your responsibility*" available at on the Gunnison County Website, or other replacement publication(s),

8.15 Wildlife Habitat Areas

Development in areas identified to be sensitive wildlife habitat areas shall be subject to all applicable sections of the *Gunnison County Land Use Resolution.*

8.16 Ridgelines

Development on ridgelines, as defined in the LUR shall be subject to the *Gunnison County Land Use Resolution*.

8.17 Snowplowed Access

Development of land beyond snowplowed access, as defined in the LUR, shall be subject to the *Gunnison County Land Use Resolution.*

8.18 Individual Sewage Disposal Systems (I.S.D.S.)

All residences and commercial structures must be connected to the Crested Butte South Metropolitan District's sewer system. In the event that the Metro District is unable to serve a lot, then that lot owner will be required to seek an I.S.D.S. permit through Gunnison County.

This page intentionally left blank.

SECTION 9: COMMERCIAL AREA DESIGN PRINCIPLES AND STANDARDS

This section establishes the substantive standards by which applications for CB South Special Area Permits will be reviewed and approved for development within the Commercial Area. These standards are intended to enhance and protect the value, desirability and attractiveness of all property, and to promote high quality design and the uniform application of standards. **Commercial Area lots that develop for strictly residential use (where permitted) are subject to the standards set forth in the *CB South Residential Design Guidelines*.**

9.1 Standards are Minimum

These improvement standards are intended to ensure a minimum level of performance. If an alternate design, process, or material can be shown to provide performance equal to or better than that established by these standards, or where it can be shown that strict compliance with these standards would cause negative environmental impacts, or would result in adverse conditions on- or off-site because of unusual topography, size or shape of the lot, existing vegetation, or other exceptional situations or condition, then the DRC shall have authority to accept the alternative. The evaluation shall consider whether the alternative will provide for an equivalent level of public safety and whether the alternative will be equally durable, so that normally anticipated maintenance costs will not be increased.

9.2 Commercial Area Goal

It is the goal of the Commercial Area Master Plan to create opportunities for economic vitality and sustainability, while integrating it within the larger community of Crested Butte South.

9.3 General Design Principles

The General Design Principles that shall apply to all development (commercial, residential, and mixed use) in the Commercial Area are as follows:

A. The Commercial Area shall have a center focus and be integrated with housing, shops, work places, schools, parks and civic facilities essential to the daily life of the CB South residents.

B. The Commercial Area shall be designed so that housing, jobs, daily needs and other activities are within easy walking distance of each other.

C. As many activities as possible shall be located within easy walking distance of transit stops. The Commercial Area shall connect with the larger regional transit network.

D. The Commercial Area shall contain a diversity of housing types to enable citizens from a wide range of economic levels and age groups to live within its boundaries.

E. The Commercial Area shall provide a variety of businesses that can provide a range of job types for CB South residents, minimizing the need to import workers with specialized skills.

F. The Commercial Area shall contain open space in the form of squares, greens and parks whose frequent use is encouraged through placement and design by a design professional. Public spaces shall be designed to encourage the attention and presence of people at all times of the day and evening and can become the backdrop for formal and informal social interaction.

G. Streets, pedestrian paths and bike paths shall contribute to a system of fully-connected, safe, and interesting routes to and through the Commercial Area. Streets shall be narrow and spatially defined by buildings, trees and lighting to discourage high speed traffic. Accommodate the automobile, but minimize its dominance in the Commercial Area.

H. Wherever possible, the natural terrain, drainage and vegetation of the area shall be preserved, with superior examples contained within key public spaces.

I. The Commercial Area design shall conserve resources and minimize waste wherever possible.

J. The Commercial Area shall provide transit stops such that any pedestrian leaving any properties within the Commercial Area can walk to a transit stop within ten (10) minutes.

K. Transit stops shall be covered, have schedules, benches, newspaper racks, trash containers, and bike racks.

L. The Commercial Area shall provide for the efficient use of water through the use of natural drainage, drought tolerant landscaping and water recycling.

M. The street orientation, the placement of buildings and the use of shading shall contribute to the energy efficiency of the Commercial Area.

N. Materials and methods of construction shall be specific to the Crested Butte area, exhibiting a continuity of history and culture and compatibility with the climate to encourage the development of local character and mountain community identity.

O. The CB South Special Area shall promote a compact commercial development pattern that discourages sprawl, in which denser and more intense forms of commercial, mixed use and residential development will occur contiguous to or in close proximity to the Commercial Area only. Multi-family residential development is encouraged to develop in proximity to the Commercial Area, and is allowed in Filings 1 and 2 only.

9.4 General Design Requirements

A. Streets and Street Orientation.

1. Streets shall be narrow with a 10’-15’ travel lane in each direction for two-way traffic and no more than 20’ for one-way streets.

2. Streets shall be designed for speeds of 15-20 MPH maximum. The following specific streets in the Commercial Area shall have a maximum allowed speed of 15 MPH: Gillespie, Haverly, and Elcho.

3. Streets shall provide on-street parking, with 7’-8’ of width for parallel parking.

4. Alleys shall be used wherever possible.

5. Sidewalks shall be provided wherever possible and shall be 5’-10’ wide (6’ average).

6. Pedestrian lights and street furniture shall be provided wherever possible.

7. No exterior lighting of any nature shall be installed or operated without approval of the DRC. Street lights in the public right-of-way are allowed if their location/ placement is approved by the CB South Metro District, in cooperation with the P.O.A.

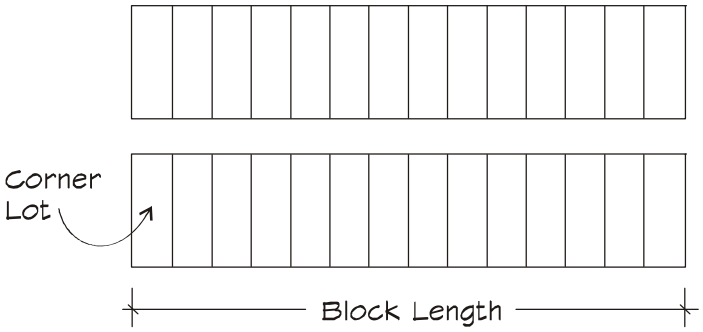

8. Corner lots shall face whatever street has a greater block length.

9. Exceptions may be granted on a case-by-case basis in the interest of public safety.

B. Building Orientation.

1. Front facades of all principle structures shall parallel the street.

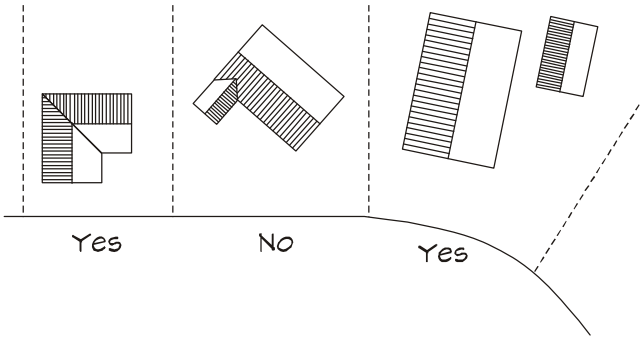

2. On corner lots, both street-facing facades shall be parallel to the intersecting streets.

3. On curvilinear streets, the front façade of the principle building shall be parallel to the tangent of the midpoint of the arc of the street.

4. On corner lots, architectural elements shall be on a diagonal to the street.

5. Buildings shall be oriented consistent with the lot direction.

6. Tall structures shall step down toward adjacent plazas, pedestrian ways, parks, etc. to ensure sunlight.

7. Exceptions may be granted on a case-by-case basis, in the interest of public safety and/or to maximize solar access.

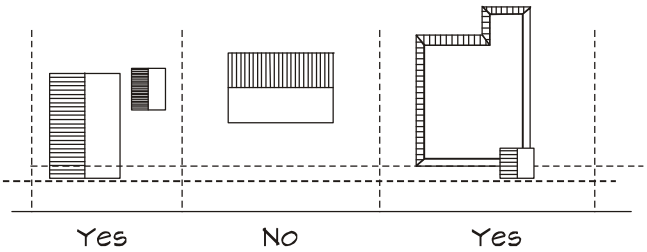

C. Build-To Lines.

1. On buildings less than 15,000 S.F., at least 60% of the front façade shall be located within 5-feet of the minimum setback line.

Corner lots must meet this requirement on both street frontages. Porches may be used to meet the 60% requirement.

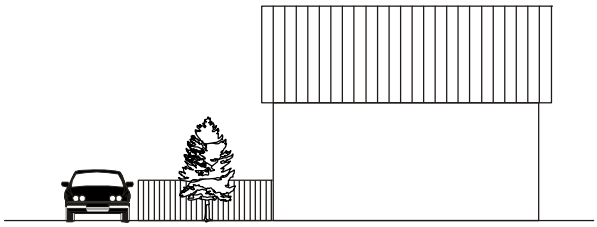

Fence, Yes

2. On buildings over 15,000 S.F., the DRC shall determine how much of the front façade will be located within five feet (5’) of the minimum setback line, considering compatibility with adjacent properties.

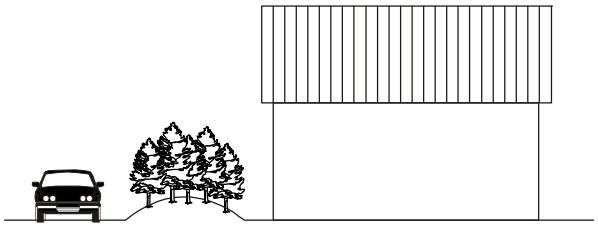

Berm, No

D. Fences.

1. In all areas forward of the front façade of the building, fences, hedgerows and planter boxes shall not be more than 42” high, measured from natural grade.

2. Man-made berms are prohibited in front yard setback.

E. Materials. Mountain architecture and locally produced and available materials shall be used if feasible.

1. Primary building materials shall be:

Log or log-veneer

Board-and-batten.
A maximum of 16-inches is allowed between boards with a 1” minimum batten width

Horizontal or Vertical wood siding
Diagonal wood siding is prohibited.
A maximum of 12” exposed lap siding is allowed.

Hardie® Plank or similar cement-based types of siding materials

2. Lesser accents, not to exceed 20% of the total amount of exterior siding per elevation (applicable to all areas of CB South), can include:

Stucco

Natural-looking stone

Shingles

Metal siding

3. Materials, patterns, and combinations of materials that vary from the above requirements may be considered by the DRC who must determine that the materials are appropriate for CB South and compatible with adjacent structures and the aesthetic goals of these *Regulations*.

9.5 Dimensional Standards for Commercially-Designated Lots

A. Open Space Required: None

B. Minimum Lot Area: 4,750 S.F.

C. Maximum Lot Area: 15,000 S.F. in the Commercial Core (lots can be combined to accommodate larger buildings); as platted on the Commercial Perimeter.

D. **Minimum Lot Width**: Fifty (50) feet

E. **Maximum Width of Front Façade**: One hundred (100) feet (can be varied for larger buildings).

F. **Maximum Floor/Area Ratio**: 1.68. (For example, on a 13,000 S.F. Lot, the maximum building size is 21,840 G.S.F.)

G **Minimum Floor Area Requirements**: 1,500 S.F.

H. **Pedestrian Access**: 10' shared easements in each block in Commercial Core; 10' shared easements in Blocks 4 and 5 as shown on the Commercial Area Master Plan.

9.6 Minimum Setbacks

All proposed buildings and structures located in CB South must be approved by the Crested Butte Fire Protection District and the Crested Butte South Metro District. No building or any portion thereof (except street frontage roof overhangs) shall be placed on any lot nearer to the front, side or rear property line than as set forth below:

A. **Commercial Core Lots**.

1. **Front**: A zero (0') front yard setback is preferred. (Awnings and front façade roof overhangs are allowed to extend beyond the property line with specific approval from the DRC, considering safety and the need for summer heat reduction).

2. **Rear**: Fifteen (15) feet

3. **Side:**

Zero feet (0') for flat-roofed buildings (including roof overhangs).

Seven and one-half feet (7.5') with non-shedding roof materials for slope-roofed buildings.

B. **Commercial Perimeter Lots with Commercial or Mixed Uses.**

1. **Front**: A zero foot (0') front yard setback is preferred. If parking is to be provided in front of the business, then the minimum setback shall be twenty-five feet (25') to allow head-in parking and a sidewalk. (Awnings and roof overhangs are allowed to extend beyond the property line with specific approval from the DRC, considering safety and the need for summer heat reduction).

2. **Rear**: Twenty-five feet (25')

3. **Side**: Seven and one-half feet (7.5') with non-shedding roof materials for slope-roofed buildings.

C. Commercial Perimeter Lots with Residential Uses.

1. **Front**: Fifteen feet (15')

2. **Rear**: Twenty-five feet (25')

3. **Side**: Seven and one-half feet (7.5') with non-shedding roof materials for slope-roofed buildings or flat roofs.

D. Setback Exception. If a single building is constructed on two or more lots, no side yard setback is required from shared interior lot lines.

E. Setbacks for Parking Areas and Driveways.

1. **Driveway Width**. The width of the intersection of any driveway with the street right-of-way shall not exceed fifteen feet (15').

2. **Parking Setback on Commercial Lots**: None (provided functional on-site snow storage can be demonstrated.)

F. Variances. Variance requests for lots located in all Filings will be heard by the P.O.A. Board in accordance with the process set forth in **Section 6 *Development Review*** above and do not require an additional hearing by the County Board of Adjustments.

9.7 Maximum Height

Buildings shall be no more than three (3) stories. No portion of any structure (except for chimney elements and elevator shafts) shall exceed a true vertical dimension of the heights prescribed below, as measured vertically from the existing grade directly below. Existing grade is the original or natural topographic grade of a lot/property prior to any disturbance or grading work. Existing grade shall be based on the USGS elevation provided on a wet-stamped survey of a property, by an engineer licensed in the State of Colorado, and completed prior to the date of the application. In the case of highly irregular topography not caused by man-made impacts within the existing site development area, an average slope may be used (see below). On any lot/property exhibiting evidence of cut or fill grade not authorized by the P.O.A. the applicant may be required to provide a professional soil analysis to determine the natural grade. No excessive fill, excavation or other artificial methods of grade manipulation will be permitted to create an exaggerated building site to manipulate the building height measurement.

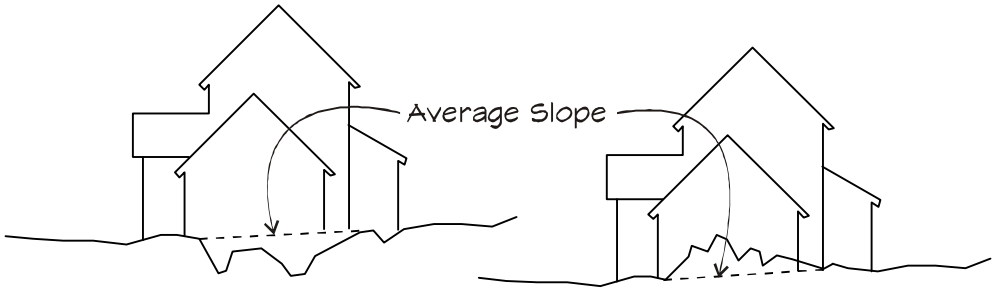

In the case of non-natural or highly irregular topography due to man-made impacts within the existing site development area, an average slope may be used.

A. Commercial Core Lots: Thirty-five feet (35').

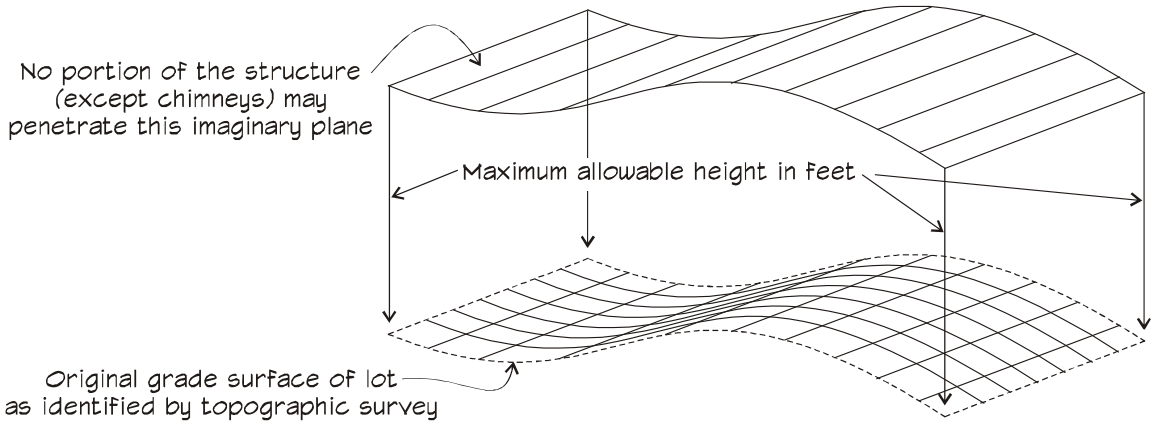

B. Commercial Perimeter Lots:

1. **Residential Use**: Thirty-two feet (32').

2. **Mixed Use**: Thirty-two feet (32').

3. **Commercial Use**: Thirty-two feet (32').

9.8 Minimum Unit Size

The following minimum floor areas, exclusive of porches, garages, and basements, shall apply to residential structures and units throughout CB South:

A. Single-Family: 1,200 S.F.

B. Duplex: 650 S.F. for each unit

C. Multi-Family:

1. Efficiency (Studio) residences: 400 S.F. for each unit

2. All other residences: 650 S.F. for each unit

9.9 Facades and Color

Exterior wall colors are encouraged to be natural, warm earth colors. Primary, bright or dramatic colors may be used as accent on trim, fascia and doors, and then only sparingly, and must be approved by the DRC, considering compatibility with neighboring properties.

A Commercial Buildings & Mixed Use Buildings

1. Building facades shall be varied and articulated to provide visual interest.

2. Building facades shall provide visual interest for pedestrians.

3. Street level windows shall be large, encompassing at least ¾ of the building width and floor plate. Where appropriate, awnings shall be provided as part of the window treatment.

4. Multiple building entries are encouraged.

5. Arcades, porches, bays and balconies are encouraged. Bays and balconies shall be provided on the upper floors of mixed-use buildings.

6. All structures shall be designed and constructed so as to avoid the appearance of box-like structures.

7. Variances from these standards may be granted by the DRC on a case-by-case basis, if it is determined that the standards established above are inappropriate for a specific business use (e.g. a daycare, bank, etc.).

B. Residential Buildings

1. Building facades shall be varied and articulated to provide visual interest.

2. There shall be at least one principle street-facing window.

3. Single-family and duplex residences shall have a street-facing front porch.

4. Outdoor spaces such as balconies or alcoves shall be provided in multi-family buildings. A minimum of 60 S.F. per residence shall be provided.

5. Duplex residences shall be asymmetrical, and shall appear as one residence.

6. On the street-facing façade, the width of the living area on the first floor shall be at least five feet (5') greater than the width of the garage or carport.

7. All structures shall be designed and constructed so as to avoid the appearance of box-like structures.

8. Variances from these standards may be granted by the DRC on a case-by-case basis if it is determined that the standards established above are incompatible with neighboring buildings.

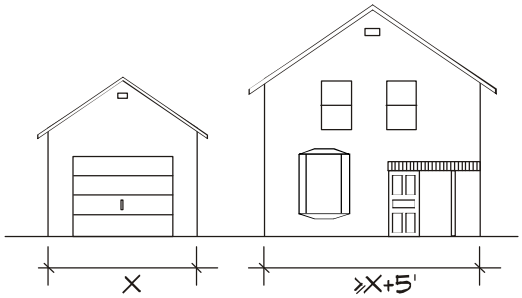

9 Detached accessory dwelling units shall be allowed in all residential areas, subject to the following:

The total dwelling area of the unit is no greater in size than one-third (1/3) of the total dwelling area of the single-family unit.

The total dwelling area of the unit is no greater in size than one thousand (1,000) square feet.

Legal title to the accessory dwelling unit and the single-family unit is held in the same name, in perpetuity.

9.10 Building Entrances

A. Commercial and Mixed Use Buildings.

1. Primary entrances shall orient to plazas, parks, or pedestrian-oriented streets.

2. Corner buildings shall have corner entries.

3. Doors shall be inset to avoid the front door interfering with pedestrians on the adjacent sidewalk, but no more than four feet (4'). Entries shall not create a cave-like effect.

4. Commercial and Mixed-Use Buildings shall have interior airlock entries.

5. All building entries shall be protected from falling and shedding snow.

6. Variances from these standards may be granted by the DRC on a case-by-case basis, if it is determined that the standards established above are inappropriate for a specific business use.

B. Residential Buildings.

1. Primary ground floor entries to multi-family buildings shall orient to the street.

2. A front walkway shall connect the front porch to the public sidewalk or street.

3. The front door to single-family, duplex and town home residences shall be visible from the street.

9.11 Roof Forms

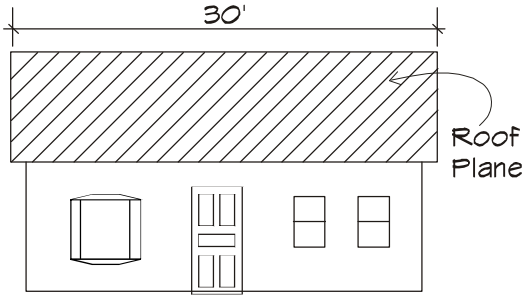

A. Residential roof forms shall be varied and broken up to avoid a single continuous roof plane.

B. On all perimeter lots, no unbroken roof plane shall be longer than 30 feet, including roof overhangs. A minimum of one foot (1') overhang is required; however, a more pronounced eave is strongly encouraged.

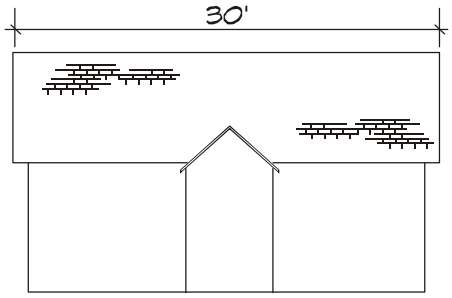

Not Broken Up

C. When located adjacent to smaller buildings, the roof forms of the building shall step down at the sides to minimize the visual impact on neighboring properties.

D. When sloped roofs are used, the majority (51%) of the roof area shall have a 5:12 pitch or greater.

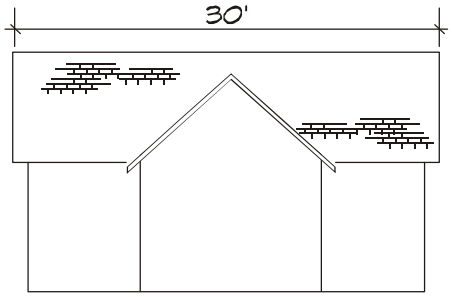

Broken Up

E. Reflective roofing material is not permitted.

F. Where flat roofs are proposed, low (no more than two (2') foot) parapets shall be used on all sides of the structure.

G. All building entries shall have roof forms that will protect them from falling and shedding snow.

H. Non-reflective, flat finish copper roofing material is permitted if the material has a dull appearance.

I. Variances from these standards may be granted by the DRC on a case-by-case basis, if it is determined that the standards established above are inappropriate for the specific building design.

9.12 Two or More Units on One Lot

A. Commercial Perimeter Lots

1. Commercial Perimeter Lots are not restricted to a certain number of units or mix of uses so long as setback, parking, and snow storage requirements, etc. can be satisfied.

2. Commercial Perimeter Lots are allowed to have single or mixed use buildings, including all residential or all commercial uses.

9.13 Residential Garages

Garage doors must be wood or metal and may be covered with vinyl cladding. All garage doors shall be stained, painted or commercially coated in a color to coordinate with the residence. In no case will white garage doors be allowed.

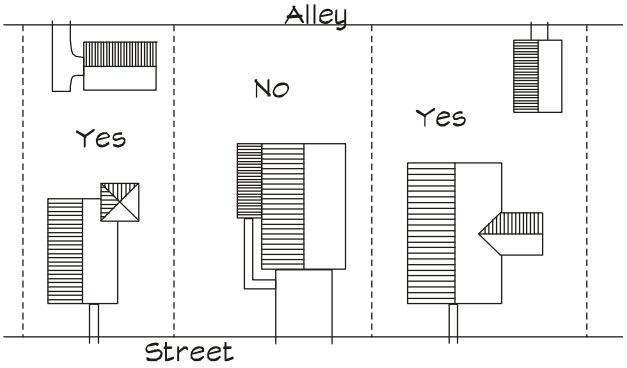

A. Position. Residential Garages shall be positioned to minimize their visual impact on the street.

B. Alley Access. Garages or carports shall be located in the rear of the property with access from the alley, if available.

C. Garage Setback. Where no alley exists, garages shall be set behind the front façade of the house by at least 10'.

9.14 Parking

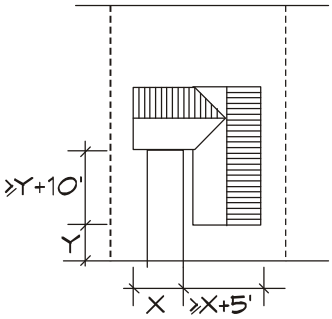

Each owner shall be responsible for compliance with these standards by its occupants, residents, employees and visitors. If parking requirements increase as a result of a change in use or increase in the number of units or employees, additional off-street parking shall be provided to comply with these standards. All uses are required to comply with the following standards:

A. Commercial Area Parking Standards.

1. Size: Each parking space shall be a minimum size of 9' x 18'. Covered parking spaces may be reduced in size with DRC approval. Parallel parking spaces shall be a minimum of 22' long and 8' wide.

2. Commercial Uses: 1.0 space per 1,000 S.F. leasable, rounded up to the nearest whole space, excluding common areas.

3. **Restaurants/bars and Assembly Halls**: 1 space per each five (5) seats based on seating capacity, excluding bar area seating.

4. **Other Uses**. Any other use that the DRC believes will generate more traffic than this standard will meet, may be required to provide additional parking as determined by the DRC based on the immediately adjacent property usages as well as immediately available public parking availability.

5. **Multi-Family Units**:

   1 space for each 1 bedroom or studio unit in the Commercial Area.

   2 spaces for each 2 or more bedroom units in the Commercial Area.

6. **Single Family and Duplex Units**: 2 spaces for each dwelling unit.

7. **Lodges and Accommodation Units**: 0.75 spaces for each sleeping room.

B. **Parking Lot Landscaping**. See Section 8 General Standards for All Developments.

C. **Parking Location**. Required off-street parking spaces shall be located on the same lot as the structure or business the spaces are intended to serve. In the Commercial Area, the following standards shall apply:

1. On-street parking adjacent to the commercial use can be used to meet the parking standards. Parallel parking is preferred over head-in parking and head-in parking is preferred over diagonal parking.

2. Parking lots shall be placed to the rear of buildings where possible.

3. Off-street parking off of alleys is preferred.

4. Off-street parking off of an alley will require a minimum of 20’ of depth from the rear property line and shall have a perpendicular 5’ to 7’ wide sidewalk between the parking area and the rear of the building.

D. **Snowmelt Systems**. Snowmelt systems may be permitted if an applicant chooses to do so, as long as the system is used and maintained, and protected by a covenant in perpetuity, recorded in the official records of Gunnison County, requiring that the applicant provides engineering specifications proving that at least 25% of the system’s energy will be provided through renewable resources. In such cases where 25% of the system’s energy will be provided through renewable resources, such systems will be approved.

E. **Multiple Uses**. If two or more principal uses occupy a single lot or structure, the standard for off-street parking shall be the additive total for each principal use of the lot or structure.

F. **Shared Parking**. When the peak use period for required parking for one land use will not overlap with the peak use period for required parking for another land use located on the same or adjacent lots, the DRC may allow the reduction of the required number of parking spaces by up to twenty-five percent (25%) of the total required. A subsequent change in use will require evaluation by the DRC and additional spaces may be required.

G. **Required Fractional Spaces**. When any calculation of required parking results in a fractional space, such fraction shall be rounded up to the next higher whole number of spaces. Upon approval of the DRC, a cash-in-lieu payment may be made instead of providing the one additional space. Such payment shall be deposited specifically into a fund earmarked for the acquisition of lands by the P.O.A. for parking purposes and/or the construction of parking spaces on land already owned by the P.O.A.

H. **Surface Improvements**. All off-street parking, access drives and loading areas within the Commercial Area and for all multiple-family buildings in CB South shall be paved. For single-family or duplex units outside of the Commercial Area, off-street parking, access drives and loading areas may be graveled but must be properly graded to assure proper drainage such that gravel does not end up in public rights-of-way or on adjacent parcels.

9.15 Pedestrian Connections

Pedestrian paths to the downtown area shall be required as set forth in the Commercial Area Master Plan. Where large blocks within the Commercial Core are developed with zero foot (0’) side yard setbacks, the DRC may require a five foot (5’) pedestrian access easement from the front to the rear of the property as generally depicted in the Commercial Area Master Plan. Additionally, the DRC may require a five foot (5’) pedestrian access easement on residential properties outside of the Commercial Area that would allow pedestrians to walk on designated sidewalks or connectors from the streets outside of the Commercial Area, through the Commercial Perimeter Lots, and into the Commercial Core. Sidewalks and pedestrian connectors to and within the Commercial Core should be hard surfaces such as concrete that can withstand snow removal operations.

9.16 Storage, Loading and Service Areas in the Commercial Area

No materials, supplies or equipment shall be stored on a lot except inside an enclosed building. Company-owned or operated trucks or delivery vehicles must be kept in a garage, behind the applicable commercial building, or behind a visual barrier screening such vehicles from view. All trash and loading facilities, including turn-arounds and docks, shall be provided at the rear of the building and must be screened to minimize their visibility from any street or alley. Screening of service areas and loading docks shall consist of any approved combination of earth mounding, landscaping, walls and/or fencing. Loading areas and docks shall not be closer than thirty feet (30’) to an abutting alley or street unless specifically approved by the DRC, considering safety and compatibility with neighboring properties.

A. Locations of trash enclosures relative to snow storage shall allow access and maintenance of the dumpsters located within them, and shall not impede the free movement of trash removal vehicles.

B. Trash dumpsters and other waste/recycling containers serving multi-family or commercial uses shall be fully covered and enclosed and completely screened from view. As a minimum, fully covered enclosures must be 6’ high with gates, and must be bear-proof.

C. In the Commercial Core area, a common enclosed trash dumpster with space for a recycling area shall be established in the rear of each block for a common group of specified users. This area shall be designated as a common area at the time of platting of the remainder of Block 6.

Pedestrian Easement
C.B. SOUTH COMMERCIAL AREA MASTER PLAN
POTENTIAL INN SITE
Pedestrian Easement
Pedestrian Easement
POTENTIAL INN SITE
HAVERLY ST.
Pedestrian Easement
N. GILLASPEY AVE.
TOWN PARK
BUS STOP
TOWN CENTER DR.
Pedestrian Easement
PEDESTRIAN CONNECTION
EL CHO AVE.
BUS STOP
ELK MOUNTAINS PLANNING GROUP, INC.
ASPEN - CRESTED BUTTE

9.17 Snow Storage and Snow Staging in Commercial Area

Adequate snow storage areas are required for each site, and snow storage in dedicated parking areas is prohibited. No building shall be allowed to shed or store snow off of the property on which it is located or onto any public right-of-way.

A. **Snow Storage Obstructions**. Snow storage areas shall be free of fences, landscaping (except for street trees and ground cover), retaining walls, and other obstructions of a similar nature. Alternative methods of snow storage may be considered by the DRC.

1. Pathways, signage, vegetation, fencing, and lighting shall be configured to cause the least obstruction to snow plowing.

2. Locations of trash enclosures relative to snow storage shall allow access and maintenance of the dumpsters located within them, but shall not impede the free movement of trash removal vehicles.

B. **Formal Review by CB South Metro District**. All designs for snow storage shall be subject to review and approval by the CB South Metro District.

C. **Minimum Width Adjacent to Plowed Area**. Designated snow storage areas shall not be less than six feet wide and, to the maximum extent feasible, shall be located adjacent to the area of the project from which snow is to be removed.

D. **Minimum Storage Area**. A snow storage area(s) that is a minimum of thirty-three percent (33%) of size of all plowed areas (parking, all walkways, etc.) shall be provided on site.

E. **Snow Staging**. It is expected that the neighborhood parks will be used for snow storage staging during big snow events, if necessary. However, it is expected that the nearby parks may also be used for overflow parking for the Commercial Area and therefore snow storage shall not be placed in the parking areas of such parks.

9.18 Exterior and Interior Lighting in Commercial Area

No exterior lighting of any nature shall be installed or operated without approval of the DRC. All interior and exterior lighting must be arranged or shielded so as to avoid excess glare or reflection onto any adjacent property, any adjacent street or into the path of oncoming vehicles. No flashing, traveling, animated or intermittent lighting shall be visible from the exterior of any Building.

A. Commercial storefront displays shall be illuminated from the interior of the building.

B. Exterior lighting shall be warm (yellow vs. grey), and downcast.

C. Only full down-cast, cut-off type light fixtures shall be used. All lenses shall be opaque; no clear lenses shall be allowed.

D. Street lights will be allowed upon approval of the P.O.A. Board and the CB South Metro District, if located in the public street right-of-way. The fixture style shall be determined by the DRC and shall be consistent throughout the area.

9.19 Mailbox Design and Location

No mailbox or newspaper box or other receptacles of any kind for use in the delivery of mail or newspapers or magazines or similar material shall be erected or located on any lot unless and until the size, location, and design for said box or receptacle shall have been approved by the DRC, considering safety and compatibility with the immediate area.

9.20 Commercial Area Signs

All signs shall be designed and installed per the *CB South Sign Regulations*.

9.21 ADA Accessibility

All new commercial and multi-family buildings, and other structures as required by the Americans with Disabilities Act, must meet ADA requirements.

This page intentionally left blank.

SECTION 10: RESIDENTIAL DESIGN STANDARDS

10.1 Residential Design

The Residential Design Standards apply to all residential lots in the CB South Special Area, outside of the Commercial Core area. These standards are set forth in the *Crested Butte South Residential Design Guidelines* available through the P.O.A.

10.2 Driveway Grades

Driveway grades for residential properties shall be in accordance with the *Crested Butte South Subdivision Residential Design Guidelines* available through the P.O.A. No variances shall be granted from these driveway grade/slope standards.

10.3 CB South Special Area

The CB South Special Area shall promote a compact development pattern that discourages sprawl, in which denser and more intense forms of commercial, mixed use and residential development will occur contiguous to or in close proximity to the Commercial Area only. Multi-family residential development is encouraged to develop in proximity to the Commercial Area, and is allowed in Filing's 1 and 2 only.

10.4 Residential Lots

Buildings on residential lots located outside of the Commercial Area shall have a maximum height of 32'.

10.5 All Proposed Building and Structure Locations

All proposed building and structure locations in CB South must be approved by the Crested Butte Fire Protection District and the Crested Butte South Metro District. No building or any portion thereof (except roof overhangs) shall be placed on any lot nearer to the front, side or rear property line than as set forth herein or in the residential guidelines.

10.6 Variance Requests

Variance requests for lots located in all Filings will be heard by the P.O.A. Board in accordance with the process set forth in **Section 6** ***Development Review, Process and Required Permits*** above and do not require an additional hearing by the County Board of Adjustments.

This page intentionally left blank.

SECTION 11: BEGINNING AND COMPLETING CONSTRUCTION

All construction activity must be in compliance with these *Regulations*, and the *Noise Guidelines for Crested Butte South* and the *CB South Construction Rules and Regulations* available through the P.O.A. Additionally, after commencement of construction of any improvement, the owner shall diligently execute the construction thereof such that the improvement shall not remain in a partly finished condition any longer than is reasonable necessary for completion thereof. All landscaping required to be provided on any lot shall be completed within 90 days after the substantial completion of the construction of any buildings to be constructed on the lot, provided, however, if weather conditions do not permit, then the landscaping shall be completed as soon thereafter as weather conditions permit. If any owner fails to undertake and complete its landscaping within this time limit, the P.O.A. may, at its option, after giving the owner thirty (30) days written notice, undertake and complete the landscaping of the lot in accordance with the landscaping plan. If the P.O.A. undertakes and completes such landscaping the cost of such landscaping shall be assessed against the owner's deposit, and if said assessment is in excess of the deposit and is not paid within 30 days after written notice of such assessment from the P.O.A., the P.O.A. may then place a lien on the lot as provided in the Covenants.

This page intentionally left blank.

SECTION 12: AMENDMENT AND TERMINATION

12.1 Term

Unless terminated, in accordance with this provision, and subject to any limitations set forth in this provision, these *Regulations* shall continue in full force and effect.

A. **Termination and Modification**. These *Regulations*, and any provision contained herein, may be terminated, modified or amended as to all or a portion of the CB South Special Area upon Acknowledgement by the BOCC. In addition, the P.O.A. agrees to forthwith provide a copy of any changes, modifications or changes to the Crested Butte South Declarations, Covenants and Restrictions, as approved by the P.O.A., to the Gunnison County Planning Department.

B. **Amendment**. The following process shall apply to an application to amend or terminate these *Regulations*:

1. **Initiation.** An amendment to these *Regulations* may be initiated by any of the following:

P.O.A. An amendment may be initiated by the P.O.A., or by any CB South Property Owner in good standing, through the submittal of an application to the P.O.A.

2. **Submittal of Draft Amendment Language**. Any initiative or application for amendment shall include at a minimum the following:

Identification of Applicant. The Applicant's name, address, telephone number and e-mail address.

Precise Wording. The precise wording of the proposed amendment, and the Section in which it is proposed to occur.

Rationale for Proposed Amendment. A concise statement of the purpose and justification for the proposed amendment.

This page intentionally left blank.

This page intentionally left blank.

SECTION 13: MISCELLANEOUS PROVISIONS

13.1 No Liability

The P.O.A., and the DRC shall not be liable for any damage, loss, or prejudice suffered or claimed by any person on account of:

A. The approval or disapproval of any plans, drawings, and/or specifications, whether or not in any way defective;

B. The construction of any improvement or performance of any work, whether or not pursuant to approved plans, drawings and/or specifications; or

C. The development of any lot within the CB South Special Area.

13.2 All Owners Bound

Any person who now owns or hereafter purchases or acquires rights in any improvements on any lot shall be bound by every covenant, condition, restriction and easement of the CB South Property Owners Association as contained in these *Regulations*, whether or not any reference to these *Regulations* is contained in the instrument by which such person acquired such interest or ownership.

13.3 Destruction of Improvements

In the event any building or other improvement on a lot is damaged or destroyed in whole or in part by any casualty, the owner shall, within one-calendar year, immediately undertake to restore the same to a condition in conformity with the plans and specification most recently approved by the DRC, or to the most recent design guidelines, whichever are more restrictive, with respect to such building or improvement, or that destroyed building or other improvement must be immediately removed.

This page intentionally left blank.

SECTION 14: NO PRECEDENT SET BY THIS DESIGNATION

Neither the designation of the CB South Special Area, nor these *Regulations*, procedures or approvals hereunder shall be construed as a precedent for any other County action.

This page intentionally left blank.

SECTION 15: VIOLATIONS AND ENFORCEMENT

Failure to comply with any provision of these *Regulations* shall be deemed a violation of these *Regulations* and the *Gunnison County Land Use Resolution* and shall be subject to enforcement by the applicable authority. To the extent that they have the authority, the Crested Butte South Property Owners Association will pursue enforcement of these *Regulations* as permitted under their governance policies. In absence of said authority, if the declaration or covenants are silent with respect to enforcement or enforcement by the P.O.A. is not occurring, and then enforcement by the County can occur.

15.1 Power

The P.O.A. shall have the power and duty to hear and make decisions regarding violations and written complaints filed with the Board and impose fines or other sanctions, pursuant to these Policies and Procedures, and the P.O.A.'s governance policies. The P.O.A. may determine enforcement action on a case by case basis, and take such actions as it may deem necessary and appropriate to assure compliance with these *Regulations*, the Crested Butte South Property Owners Association, Inc. Covenants and Restrictions ("Covenants"), the Association's Articles of Incorporation, Bylaws, and rules and regulations promulgated thereunder ("Documents"), and to create a safe and harmonious living environment.

These enforcement provisions may be in addition to other specific provisions outlined in the Association's Covenants and Restrictions, Articles of Incorporation, Bylaws or Rules and Regulations ("Governing Documents"), and the Association is not required to follow these enforcement provisions before seeking such other remedies. The Association may choose a legal remedy or seek assistance from other enforcement authorities, such as police, fire, or animal control, as it deems appropriate.

BOARD OF COUNTY COMMISSIONERS OF GUNNISON COUNTY
RESOLUTION NO. _____SERIES 2020

WHEREAS, the Crested Butte South Property Owners Association has submitted a Land Use Change application to amend the Commercial Area Master Plan and the Special Area Regulations. The Crested Butte South Special Area Regulations were approved by the Gunnison County Board of Commissioners in Resolution 2008-38 and,

WHEREAS, The *Crested Butte South Special Area Regulations*, Section 106: *Amendment of Existing Covenants, Restrictions, Resolutions, Rules and Regulations* states, "The Existing Covenants, Restrictions, Resolutions, Rules and Regulations, and no portion of them, shall be amended without the prior written acknowledgement, by motion or recorded resolution, of the BOCC;" and

WHEREAS, The CB South POA approved the Commercial Area Master Plan (CAMP) at their Board meeting on November 13, 2019; and

NOW, THEREFORE, BE IT RESOLVED by the Board of County Commissioners of Gunnison County, Colorado, that the Crested Butte South Special Area Regulations be replaced with the attached Exhibit A, "Crested Butte South Special Area Regulations and Commercial Area Master Plan."

THIS RESOLUTION AND THE APPROVAL GRANTED HEREBY shall not be effective unless and until a copy is recorded in the Office of the Clerk and Recorder of Gunnison County.

INTRODUCED by Commissioner _____, seconded by Commissioner _____, and passed on this ___day of _____, 2020.

BOARD OF COUNTY COMMISSIONERS

_____	_____	_____
Jonathan Houck,	Roland Mason,	John Messner,
Chairperson	Commissioner	Commissioner

ATTEST:

Gunnison County Clerk and Recorder