AGENDA ITEM or FINAL CONTRACT REVIEW SUBMITTAL FORM

Agenda Item: Acknowledgement of County Managers Signature; Cont

Action Requested: County Manager Signature

Parties to the Agreement: EC Electrical

Term Begins: **Term Ends:** **Grant Contract #:**

Summary:

electrical scope of work for CNG station
cost plus fee with guaranteed maximum price agreement

Fiscal Impact: 82225

Submitted by: John Cattles **Submitter's Email Address:** jcattles@gunnisoncounty.org

Finance Review: (●) Required ( ) Not Required

Comments:
Costs to be reimbursed over time via a per unit reduction for Gunnison County use. No concerns. ln

Reviewed by: GUNCOUNTY1\lNienhueser Discharge Date: 5/10/2017

County Attorney Review: (●) Required ( ) Not Required

Comments:
ok - gs

Reveiwed by: GUNCOUNTY1\gstuhr Discharge Date: 5/11/2017 Certificate of Insurance Required Yes (●) No ( )

County Manager Review:

Comments:

Reveiwed by: GUNCOUNTY1\mbirnie Discharge Date: 5/11/2017

(●) Consent Agenda ( ) Regular Agenda ( ) Worksession Time Allotted: 0

Agenda Date: 5/16/2017

Revised April 2015

AIA® Document A107™ – 2007

Standard Form of Agreement Between Owner and Contractor for a Project of Limited Scope

AGREEMENT made as of the day of in the year
(In words, indicate day, month and year.)
April Seventeenth Two Thousand Seventeen, 4/17/17
BETWEEN the Owner:
(Name, legal status, address and other information)

Gunnison County
Board of County Commisioners
200 E. Virginia Ave.
Gunnison, CO, 81230

and the Contractor:
(Name, legal status, address and other information)

E.C. Electric
106 S. Taylor St.
Gunnison, CO 81230

for the following Project:
(Name, location and detailed description)

CNG Fill Station
508 W. Tomichi Ave.

(Paragraphs deleted)
Gunnison, CO 81230

The Owner and Contractor agree as follows.

ADDITIONS AND DELETIONS:
The author of this document has added information needed for its completion. The author may also have revised the text of the original AIA standard form. An *Additions and Deletions Report* that notes added information as well as revisions to the standard form text is available from the author and should be reviewed. A vertical line in the left margin of this document indicates where the author has added necessary information and where the author has added to or deleted from the original AIA text.

This document has important legal consequences. Consultation with an attorney is encouraged with respect to its completion or modification.

Init.
/

AIA Document A107™ – 2007. Copyright © 1936, 1951, 1958, 1961, 1963, 1966, 1970, 1974, 1978, 1987, 1997 and 2007 by The American Institute of Architects. **All rights reserved. WARNING: This AIA® Document is protected by U.S. Copyright Law and International Treaties. Unauthorized reproduction or distribution of this AIA® Document, or any portion of it, may result in severe civil and criminal penalties, and will be prosecuted to the maximum extent possible under the law.** This document was produced by AIA software at 16:40:22 on 04/14/2017 under Order No.9565289397 which expires on 04/11/2018, and is not for resale.
User Notes:

(910312259)

TABLE OF ARTICLES

1 THE WORK OF THIS CONTRACT

2 DATE OF COMMENCEMENT AND SUBSTANTIAL COMPLETION

3 CONTRACT SUM

4 PAYMENT

5 DISPUTE RESOLUTION

6 ENUMERATION OF CONTRACT DOCUMENTS

7 GENERAL PROVISIONS

8 OWNER

9 CONTRACTOR

10 ARCHITECT

11 SUBCONTRACTORS

12 CONSTRUCTION BY OWNER OR BY SEPARATE CONTRACTORS

13 CHANGES IN THE WORK

14 TIME

15 PAYMENTS AND COMPLETION

16 PROTECTION OF PERSONS AND PROPERTY

17 INSURANCE & BONDS

18 CORRECTION OF WORK

19 MISCELLANEOUS PROVISIONS

20 TERMINATION OF THE CONTRACT

21 CLAIMS AND DISPUTES

EXHIBIT A DETERMINATION OF THE COST OF THE WORK

ARTICLE 1 THE WORK OF THIS CONTRACT

The Contractor shall execute the Work described in the Contract Documents, except as specifically indicated in the Contract Documents to be the responsibility of others.

ARTICLE 2 DATE OF COMMENCEMENT AND SUBSTANTIAL COMPLETION

§ 2.1 The date of commencement of the Work shall be the date of this Agreement .

Init.

/

AIA Document A107™ – 2007. Copyright © 1936, 1951, 1958, 1961, 1963, 1966, 1970, 1974, 1978, 1987, 1997 and 2007 by The American Institute of Architects. **All rights reserved. WARNING: This AIA® Document is protected by U.S. Copyright Law and International Treaties. Unauthorized reproduction or distribution of this AIA® Document, or any portion of it, may result in severe civil and criminal penalties, and will be prosecuted to the maximum extent possible under the law.** This document was produced by AIA software at 16:40:22 on 04/14/2017 under Order No.9565289397 which expires on 04/11/2018, and is not for resale.
User Notes:

§ **2.2** The Contract Time shall be measured from the date of commencement.

§ **2.3** The Contractor shall achieve Substantial Completion of the entire Work not later than May 15,2017

2.4 Scope of Work
The Contractor shall perform the ELECTRICAL scope of work as described in the CONSTRUCTION DRAWINGS. Referenced in section 6 of this document.
2.4.1 Electrical scope definition:
1. All conduit and wire shown on the prints dated March 17 Construction Set. The conduit and wire will will be run in accordance with the NEC regulations for Class 1 Division 1 and Class 1 Division 2 locations.
2. Installation of all service equipment and control panels supplied by others.
3. Supply and install of (1) explosion proof pole light at the natural gas island location.
4. Supply and install of (4) explosion proof lights to mounted on the walls in the enclosure.
5. All conduit and wire associated with taking power from the utility transformer to the 700A service provided by others.
6. We anticipate a single point connection to the Trillium provided pre-manufactured skids.
7. State electrical permit associated with the project.

(Paragraphs deleted)

ARTICLE 3 CONTRACT SUM
§ **3.1** The Owner shall pay the Contractor the Contract Sum in current funds for the Contractor's performance of the Contract. The Contract Sum shall be one of the following:
(Check the appropriate box.)

[ ] Stipulated Sum, in accordance with Section 3.2 below

[ ] Cost of the Work plus the Contractor's Fee, in accordance with Section 3.3 below

[X] Cost of the Work plus the Contractor's Fee with a Guaranteed Maximum Price, in accordance with Section 3.4 below

(Paragraphs deleted)
(Table deleted)
(Paragraphs deleted)
(Table deleted)
(Paragraphs deleted)
§ 3.4 COST OF THE WORK PLUS CONTRACTOR'S FEE WITH A GUARANTEED MAXIMUM PRICE
§ **3.4.1** The Cost of the Work is as defined in Exhibit A, Determination of the Cost of the Work.

§ **3.4.2** The Contractor's Fee:
(State a lump sum, percentage of Cost of the Work or other provision for determining the Contractor's Fee and the method of adjustment to the Fee for changes in the Work.)

20% fee on labor and materials

§ 3.4.3 GUARANTEED MAXIMUM PRICE
§ **3.4.3.1** The sum of the Cost of the Work and the Contractor's Fee is guaranteed by the Contractor not to exceed ($ 82,225), subject to additions and deductions by changes in the Work as provided in the Contract Documents. Such maximum sum is referred to in the Contract Documents as the Guaranteed Maximum Price. Costs which would cause the Guaranteed Maximum Price to be exceeded shall be paid by the Contractor without reimbursement by the Owner.
(Paragraphs deleted)

AIA Document A107™ – 2007. Copyright © 1936, 1951, 1958, 1961, 1963, 1966, 1970, 1974, 1978, 1987, 1997 and 2007 by The American Institute of Architects. **All rights reserved. WARNING: This AIA® Document is protected by U.S. Copyright Law and International Treaties. Unauthorized reproduction or distribution of this AIA® Document, or any portion of it, may result in severe civil and criminal penalties, and will be prosecuted to the maximum extent possible under the law.** This document was produced by AIA software at 16:40:22 on 04/14/2017 under Order No.9565289397 which expires on 04/11/2018, and is not for resale.
User Notes:

(910312259)

§ 3.4.3.2 The Guaranteed Maximum Price is based on the following alternates, if any, which are described in the Contract Documents and are hereby accepted by the Owner:

§ 3.4.3.3 Unit Prices, if any:
(Identify and state the unit price, and state the quantity limitations, if any, to which the unit price will be applicable.)

Item	Units and Limitations	Price Per Unit ($0.00)
Project Manager	Hourly	80.00
Journeyman electrician	Hourly	70.00
Apprentice electrician	Hourly	50.00

(Paragraphs deleted)
(Table deleted)
(Paragraphs deleted)

ARTICLE 4 PAYMENTS

§ 4.1 PROGRESS PAYMENTS

§ 4.1.1 The Contractor will invoice the Owner once monthly during the term of the contract for work performed during that month in accordance with Article 15.

§ 4.1.2 The period covered by each Application for Payment shall be one calendar month ending on the last day of the month, or as follows:

§ 4.1.3 Payment shall be made by the Owner within 30 days of receipt of an Invoice from the Contractor

§ 4.1.4 Retainage, if any, shall be withheld as follows:

10% retainage held by the owner until final acceptance of work by Trillium

§ 4.1.5 Payments due and unpaid under the Contract shall bear interest from the date payment is due at the rate stated below, or in the absence thereof, at the legal rate prevailing from time to time at the place where the Project is located.
(Insert rate of interest agreed upon, if any.)

1.5 % Month

§ 4.2 FINAL PAYMENT

§ 4.2.1 Final payment, constituting the entire unpaid balance of the Contract Sum, shall be made by the Owner to the Contractor when

.1 the Contractor has fully performed the Contract except for the Contractor's responsibility to correct Work as provided in Section 18.2, and to satisfy other requirements, if any, which extend beyond final payment;

.2 the contractor has submitted a final accounting for the Cost of the Work, where payment is on the basis of the Cost of the Work with a guaranteed maximum price

§ 4.2.2 The Owner's final payment to the Contractor shall be made no later than 30 days after the issuance of the final acceptance of work by the station operator: Trillium CNG

ARTICLE 5 DISPUTE RESOLUTION

§ 5.1 BINDING DISPUTE RESOLUTION

The method of binding dispute resolution shall be as follows:

AIA Document A107™ – 2007. Copyright © 1936, 1951, 1958, 1961, 1963, 1966, 1970, 1974, 1978, 1987, 1997 and 2007 by The American Institute of Architects. **All rights reserved. WARNING: This AIA® Document is protected by U.S. Copyright Law and International Treaties. Unauthorized reproduction or distribution of this AIA® Document, or any portion of it, may result in severe civil and criminal penalties, and will be prosecuted to the maximum extent possible under the law.** This document was produced by AIA software at 16:40:22 on 04/14/2017 under Order No.9565289397 which expires on 04/11/2018, and is not for resale.
User Notes:

Litigation in a court of competent jurisdiction

ARTICLE 6 ENUMERATION OF CONTRACT DOCUMENTS

§ 6.1 The Contract Documents are defined in Article 7 and, except for Modifications issued after execution of this Agreement, are enumerated in the sections below.

§ 6.1.1 The Agreement is this executed AIA Document A107–2007, Standard Form of Agreement Between Owner and Contractor for a Project of Limited Scope.

(Table deleted)
(Paragraphs deleted)
(Table deleted)
(Paragraph deleted)
§ 6.1.4 The Drawings:
(Either list the Drawings here or refer to an exhibit attached to this Agreement.)
Gunnison CNG Station Construction Drawings/ Revision 1 Dated 4/12/17 , attached as exhibit "A"

(Paragraphs deleted)
(Table deleted)
(Paragraph deleted)

ARTICLE 7 GENERAL PROVISIONS

§ 7.1 THE CONTRACT DOCUMENTS

The Contract Documents are enumerated in Article 6 and consist of this Agreement (including, if applicable, Supplementary and other Conditions of the Contract), Drawings, Specifications, Addenda issued prior to the execution of this Agreement, other documents listed in this Agreement and Modifications issued after execution of this Agreement. A Modification is (1) a written amendment to the Contract signed by both parties, (2) a Change Order, (3) a Construction Change Directive or (4) a written order for a minor change in the Work issued by the Architect. The intent of the Contract Documents is to include all items necessary for the proper execution and completion of the Work by the Contractor. The Contract Documents are complementary, and what is required by one shall be as binding as if required by all; performance by the Contractor shall be required to the extent consistent with the Contract Documents and reasonably inferable from them as being necessary to produce the indicated results.

§ 7.2 THE CONTRACT

The Contract Documents form the Contract for Construction. The Contract represents the entire and integrated agreement between the parties hereto and supersedes prior negotiations, representations or agreements, either written or oral. The Contract may be amended or modified only by a Modification. The Contract Documents shall not be construed to create a contractual relationship of any kind between any persons or entities other than the Owner and the Contractor.

§ 7.3 THE WORK

The term "Work" means the construction and services required by the Contract Documents, whether completed or partially completed, and includes all other labor, materials, equipment and services provided or to be provided by the Contractor to fulfill the Contractor's obligations. The Work may constitute the whole or a part of the Project.

AIA Document A107™ – 2007. Copyright © 1936, 1951, 1958, 1961, 1963, 1966, 1970, 1974, 1978, 1987, 1997 and 2007 by The American Institute of Architects. **All rights reserved. WARNING: This AIA® Document is protected by U.S. Copyright Law and International Treaties. Unauthorized reproduction or distribution of this AIA® Document, or any portion of it, may result in severe civil and criminal penalties, and will be prosecuted to the maximum extent possible under the law.** This document was produced by AIA software at 16:40:22 on 04/14/2017 under Order No.9565289397 which expires on 04/11/2018, and is not for resale.
User Notes:

§ 7.4 INSTRUMENTS OF SERVICE

Instruments of Service are representations, in any medium of expression now known or later developed, of the tangible and intangible creative work performed by the Architect and the Architect's consultants under their respective professional services agreements. Instruments of Service may include, without limitation, studies, surveys, models, sketches, drawings, specifications, and other similar materials.

§ 7.5 OWNERSHIP AND USE OF DRAWINGS, SPECIFICATIONS AND OTHER INSTRUMENTS OF SERVICE

§ 7.5.1 The Architect and the Architect's consultants shall be deemed the authors and owners of their respective Instruments of Service, including the Drawings and Specifications, and will retain all common law, statutory and other reserved rights, including copyrights. The Contractor, Subcontractors, Sub-subcontractors, and material or equipment suppliers shall not own or claim a copyright in the Instruments of Service. Submittal or distribution to meet official regulatory requirements or for other purposes in connection with this Project is not to be construed as publication in derogation of the Architect's or Architect's consultants' reserved rights.

§ 7.5.2 The Contractor, Subcontractors, Sub-subcontractors and material or equipment suppliers are authorized to use and reproduce the Instruments of Service provided to them solely and exclusively for execution of the Work. All copies made under this authorization shall bear the copyright notice, if any, shown on the Instruments of Service. The Contractor, Subcontractors, Sub-subcontractors, and material or equipment suppliers may not use the Instruments of Service on other projects or for additions to this Project outside the scope of the Work without the specific written consent of the Owner, Architect and the Architect's consultants.

(Paragraphs deleted)

ARTICLE 8 OWNER

§ 8.1 INFORMATION AND SERVICES REQUIRED OF THE OWNER

§ 8.1.1 The Owner shall furnish all necessary surveys and a legal description of the site.

§ 8.1.2 The Contractor shall be entitled to rely on the accuracy of information furnished by the Owner but shall exercise proper precautions relating to the safe performance of the Work.

§ 8.1.3 Except for permits and fees that are the responsibility of the Contractor under the Contract Documents, including those required under Section 9.6.1, the Owner shall secure and pay for other necessary approvals, easements, assessments and charges required for the construction, use or occupancy of permanent structures or for permanent changes in existing facilities.

§ 8.2 OWNER'S RIGHT TO STOP THE WORK

If the Contractor fails to correct Work which is not in accordance with the requirements of the Contract Documents, or repeatedly fails to carry out the Work in accordance with the Contract Documents, the Owner may issue a written order to the Contractor to stop the Work, or any portion thereof, until the cause for such order is eliminated; however, the right of the Owner to stop the Work shall not give rise to a duty on the part of the Owner to exercise this right for the benefit of the Contractor or any other person or entity.

§ 8.3 OWNER'S RIGHT TO CARRY OUT THE WORK

If the Contractor defaults or neglects to carry out the Work in accordance with the Contract Documents, and fails within a ten-day period after receipt of written notice from the Owner to commence and continue correction of such default or neglect with diligence and promptness, the Owner, without prejudice to any other remedy the Owner may have, may correct such deficiencies and may deduct the reasonable cost thereof, including Owner's expenses and compensation for the Architect's services made necessary thereby, from the payment then or thereafter due the Contractor.

ARTICLE 9 CONTRACTOR

§ 9.1 REVIEW OF CONTRACT DOCUMENTS AND FIELD CONDITIONS BY CONTRACTOR

§ 9.1.1 Execution of the Contract by the Contractor is a representation that the Contractor has visited the site, become generally familiar with local conditions under which the Work is to be performed and correlated personal observations with requirements of the Contract Documents.

AIA Document A107™ – 2007. Copyright © 1936, 1951, 1958, 1961, 1963, 1966, 1970, 1974, 1978, 1987, 1997 and 2007 by The American Institute of Architects. **All rights reserved. WARNING: This AIA® Document is protected by U.S. Copyright Law and International Treaties. Unauthorized reproduction or distribution of this AIA® Document, or any portion of it, may result in severe civil and criminal penalties, and will be prosecuted to the maximum extent possible under the law.** This document was produced by AIA software at 16:40:22 on 04/14/2017 under Order No.9565289397 which expires on 04/11/2018, and is not for resale.
User Notes:

§ 9.1.2 Because the Contract Documents are complementary, the Contractor shall, before starting each portion of the Work, carefully study and compare the various Contract Documents relative to that portion of the Work, as well as the information furnished by the Owner pursuant to Section 8.1.1, shall take field measurements of any existing conditions related to that portion of the Work and shall observe any conditions at the site affecting it. These obligations are for the purpose of facilitating coordination and construction by the Contractor and are not for the purpose of discovering errors, omissions, or inconsistencies in the Contract Documents; however, the Contractor shall promptly report to the Architect any errors, inconsistencies, or omissions discovered by or made known to the Contractor as a request for information in such form as the Architect may require. It is recognized that the Contractor's review is made in the Contractor's capacity as a contractor and not as a licensed design professional unless otherwise specifically provided in the Contract Documents.

§ 9.1.3 The Contractor is not required to ascertain that the Contract Documents are in accordance with applicable laws, statutes, ordinances, codes, rules and regulations, or lawful orders of public authorities, but the Contractor shall promptly report to the Architect any nonconformity discovered by or made known to the Contractor as a request for information in such form as the Architect may require.

§ 9.2 SUPERVISION AND CONSTRUCTION PROCEDURES

§ 9.2.1 The Contractor shall supervise and direct the Work, using the Contractor's best skill and attention. The Contractor shall be solely responsible for and have control over construction means, methods, techniques, sequences and procedures, and for coordinating all portions of the Work under the Contract, unless the Contract Documents give other specific instructions concerning these matters.

§ 9.2.2 The Contractor shall be responsible to the Owner for acts and omissions of the Contractor's employees, Subcontractors and their agents and employees, and other persons or entities performing portions of the Work for or on behalf of the Contractor or any of its Subcontractors.

§ 9.3 LABOR AND MATERIALS

§ 9.3.1 Unless otherwise provided in the Contract Documents, the Contractor shall provide and pay for labor, materials, equipment, tools, construction equipment and machinery, water, heat, utilities, transportation, and other facilities and services necessary for proper execution and completion of the Work whether temporary or permanent and whether or not incorporated or to be incorporated in the Work.

§ 9.3.2 The Contractor shall enforce strict discipline and good order among the Contractor's employees and other persons carrying out the Work. The Contractor shall not permit employment of unfit persons or persons not skilled in tasks assigned to them.

§ 9.3.3 The Contractor may make a substitution only with the consent of the Owner, after evaluation by the Architect and in accordance with a Modification.

§ 9.4 WARRANTY

The Contractor warrants to the Owner and Architect that materials and equipment furnished under the Contract will be of good quality and new unless the Contract Documents require or permit otherwise. The Contractor further warrants that the Work will conform to the requirements of the Contract Documents and will be free from defects, except for those inherent in the quality of the Work the Contract Documents require or permit. Work, materials, or equipment not conforming to these requirements may be considered defective. The Contractor's warranty excludes remedy for damage or defect caused by abuse, alterations to the Work not executed by the Contractor, improper or insufficient maintenance, improper operation or normal wear and tear under normal usage.

§ 9.5 TAXES

The Contractor shall pay sales, consumer, use and other similar taxes that are legally enacted when bids are received or negotiations concluded, whether or not yet effective or merely scheduled to go into effect.

§ 9.6 PERMITS, FEES, NOTICES, AND COMPLIANCE WITH LAWS

§ 9.6.1 Unless otherwise provided in the Contract Documents, the Contractor shall secure and pay for the building permit as well as other permits, fees, licenses and inspections by government agencies necessary for proper execution and completion of the Work that are customarily secured after execution of the Contract and legally required at the time bids are received or negotiations concluded.

AIA Document A107™ – 2007. Copyright © 1936, 1951, 1958, 1961, 1963, 1966, 1970, 1974, 1978, 1987, 1997 and 2007 by The American Institute of Architects. **All rights reserved. WARNING: This AIA® Document is protected by U.S. Copyright Law and International Treaties. Unauthorized reproduction or distribution of this AIA® Document, or any portion of it, may result in severe civil and criminal penalties, and will be prosecuted to the maximum extent possible under the law.** This document was produced by AIA software at 16:40:22 on 04/14/2017 under Order No.9565289397 which expires on 04/11/2018, and is not for resale.
User Notes:

§ 9.6.2 The Contractor shall comply with and give notices required by applicable laws, statutes, ordinances, codes, rules and regulations, and lawful orders of public authorities applicable to performance of the Work. If the Contractor performs Work knowing it to be contrary to applicable laws, statutes, ordinances, codes, rules and regulations, or lawful orders of public authorities, the Contractor shall assume appropriate responsibility for such Work and shall bear the costs attributable to correction.

§ 9.7 ALLOWANCES

The Contractor shall include in the Contract Sum all allowances stated in the Contract Documents. The Owner shall select materials and equipment under allowances with reasonable promptness. Allowance amounts shall include the costs to the Contractor of materials and equipment delivered at the site and all required taxes, less applicable trade discounts. Allowance amounts shall not include the Contractor's costs for unloading and handling at the site, labor, installation, overhead, and profit.

§ 9.8 CONTRACTOR'S CONSTRUCTION SCHEDULES

§ 9.8.1 The Contractor, promptly after being awarded the Contract, shall prepare and submit for the Owner's and Architect's information a Contractor's construction schedule for the Work. The schedule shall not exceed time limits current under the Contract Documents, shall be revised at appropriate intervals as required by the conditions of the Work and Project, shall be related to the entire Project to the extent required by the Contract Documents, and shall provide for expeditious and practicable execution of the Work.

§ 9.8.2 The Contractor shall perform the Work in general accordance with the most recent schedule submitted to the Owner and Architect.

§ 9.9 SUBMITTALS

§ 9.9.1 The Contractor shall review for compliance with the Contract Documents and submit to the Architect Shop Drawings, Product Data, Samples and similar submittals required by the Contract Documents in coordination with the Contractor's construction schedule and in such sequence as to allow the Architect reasonable time for review. By submitting Shop Drawings, Product Data, Samples and similar submittals, the Contractor represents to the Owner and Architect that the Contractor has (1) reviewed and approved them; (2) determined and verified materials, field measurements and field construction criteria related thereto, or will do so; and (3) checked and coordinated the information contained within such submittals with the requirements of the Work and of the Contract Documents. The Work shall be in accordance with approved submittals.

§ 9.9.2 Shop Drawings, Product Data, Samples and similar submittals are not Contract Documents.

§ 9.10 USE OF SITE

The Contractor shall confine operations at the site to areas permitted by applicable laws, statutes, ordinances, codes, rules and regulations, lawful orders of public authorities, and the Contract Documents and shall not unreasonably encumber the site with materials or equipment.

§ 9.11 CUTTING AND PATCHING

The Contractor shall be responsible for cutting, fitting or patching required to complete the Work or to make its parts fit together properly.

§ 9.12 CLEANING UP

The Contractor shall keep the premises and surrounding area free from accumulation of waste materials or rubbish caused by operations under the Contract. At completion of the Work, the Contractor shall remove waste materials, rubbish, the Contractor's tools, construction equipment, machinery and surplus material from and about the Project.

§ 9.13 ROYALTIES, PATENTS AND COPYRIGHTS

The Contractor shall pay all royalties and license fees. The Contractor shall defend suits or claims for infringement of copyrights and patent rights and shall hold the Owner and Architect harmless from loss on account thereof, but shall not be responsible for such defense or loss when a particular design, process or product of a particular manufacturer or manufacturers is required by the Contract Documents or where the copyright violations are contained in Drawings, Specifications or other documents prepared by the Owner or Architect. However, if the Contractor has reason to believe that the required design, process or product is an infringement of a copyright or a

AIA Document A107™ – 2007. Copyright © 1936, 1951, 1958, 1961, 1963, 1966, 1970, 1974, 1978, 1987, 1997 and 2007 by The American Institute of Architects. **All rights reserved. WARNING: This AIA® Document is protected by U.S. Copyright Law and International Treaties. Unauthorized reproduction or distribution of this AIA® Document, or any portion of it, may result in severe civil and criminal penalties, and will be prosecuted to the maximum extent possible under the law.** This document was produced by AIA software at 16:40:22 on 04/14/2017 under Order No.9565289397 which expires on 04/11/2018, and is not for resale.
User Notes:

(910312259)

patent, the Contractor shall be responsible for such loss unless such information is promptly furnished to the Architect.

§ 9.14 ACCESS TO WORK
The Contractor shall provide the Owner and Architect access to the Work in preparation and progress wherever located.

§ 9.15 INDEMNIFICATION
§ 9.15.1 To the fullest extent permitted by law, the Contractor shall indemnify and hold harmless the Owner, Architect, Architect's consultants and agents and employees of any of them from and against claims, damages, losses and expenses, including but not limited to attorneys' fees, arising out of or resulting from performance of the Work, provided that such claim, damage, loss or expense is attributable to bodily injury, sickness, disease or death, or to injury to or destruction of tangible property (other than the Work itself), but only to the extent caused by the negligent acts or omissions of the Contractor, a Subcontractor, anyone directly or indirectly employed by them or anyone for whose acts they may be liable, regardless of whether or not such claim, damage, loss or expense is caused in part by a party indemnified hereunder. Such obligation shall not be construed to negate, abridge, or reduce other rights or obligations of indemnity which would otherwise exist as to a party or person described in this Section 9.15.1.

§ 9.15.2 In claims against any person or entity indemnified under this Section 9.15 by an employee of the Contractor, a Subcontractor, anyone directly or indirectly employed by them or anyone for whose acts they may be liable, the indemnification obligation under Section 9.15.1 shall not be limited by a limitation on amount or type of damages, compensation or benefits payable by or for the Contractor or Subcontractor under workers' compensation acts, disability benefit acts or other employee benefit acts.

ARTICLE 10 ARCHITECT
§ 10.1 The Architect is defined as the author of the Construction Documents as noted on the Plans.
(Paragraphs deleted)
§ 10.6 The Architect will review and approve or take other appropriate action upon the Contractor's submittals such as Shop Drawings, Product Data and Samples, but only for the limited purpose of checking for conformance with information given and the design concept expressed in the Contract Documents.

§ 10.7 The Architect will interpret and decide matters concerning performance under, and requirements of, the Contract Documents on written request of either the Owner or Contractor.

(Paragraph deleted)
§ 10.9 Duties, responsibilities and limitations of authority of the Architect as set forth in the Contract Documents shall not be restricted, modified or extended without written consent of the Owner, Contractor and Architect. Consent shall not be unreasonably withheld.

ARTICLE 11 SUBCONTRACTORS
§ 11.1 A Subcontractor is a person or entity who has a direct contract with the Contractor to perform a portion of the Work at the site.

§ 11.2 Unless otherwise stated in the Contract Documents or the bidding requirements, the Contractor, as soon as practicable after award of the Contract, shall furnish in writing to the Owner the names of the Subcontractors or suppliers for each of the principal portions of the Work. The Contractor shall not contract with any Subcontractor or supplier to whom the Owner has made reasonable written objection within ten days after receipt of the Contractor's list of Subcontractors and suppliers. If the proposed but rejected Subcontractor was reasonably capable of performing the Work, the Contract Sum and Contract Time shall be increased or decreased by the difference, if any, occasioned by such change, and an appropriate Change Order shall be issued before commencement of the substitute Subcontractor's Work. The Contractor shall not be required to contract with anyone to whom the Contractor has made reasonable objection.

§ 11.3 Contracts between the Contractor and Subcontractors shall (1) require each Subcontractor, to the extent of the Work to be performed by the Subcontractor, to be bound to the Contractor by the terms of the Contract Documents,

AIA Document A107™ – 2007. Copyright © 1936, 1951, 1958, 1961, 1963, 1966, 1970, 1974, 1978, 1987, 1997 and 2007 by The American Institute of Architects. **All rights reserved. WARNING: This AIA® Document is protected by U.S. Copyright Law and International Treaties. Unauthorized reproduction or distribution of this AIA® Document, or any portion of it, may result in severe civil and criminal penalties, and will be prosecuted to the maximum extent possible under the law.** This document was produced by AIA software at 16:40:22 on 04/14/2017 under Order No.9565289397 which expires on 04/11/2018, and is not for resale.
User Notes:

and to assume toward the Contractor all the obligations and responsibilities, including the responsibility for safety of the Subcontractor's Work, which the Contractor, by the Contract Documents, assumes toward the Owner and Architect, and (2) allow the Subcontractor the benefit of all rights, remedies and redress against the Contractor that the Contractor, by these Contract Documents, has against the Owner.

ARTICLE 12 CONSTRUCTION BY OWNER OR BY SEPARATE CONTRACTORS

§ 12.1 The Owner reserves the right to perform construction or operations related to the Project with the Owner's own forces, and to award separate contracts in connection with other portions of the Project or other construction or operations on the site under conditions of the contract identical or substantially similar to these, including those portions related to insurance and waiver of subrogation. If the Contractor claims that delay or additional cost is involved because of such action by the Owner, the Contractor shall make such claim as provided in Article 21.

§ 12.2 The Contractor shall afford the Owner and separate contractors reasonable opportunity for introduction and storage of their materials and equipment and performance of their activities, and shall connect and coordinate the Contractor's activities with theirs as required by the Contract Documents.

§ 12.3 The Owner shall be reimbursed by the Contractor for costs incurred by the Owner which are payable to a separate contractor because of delays, improperly timed activities or defective construction of the Contractor. The Owner shall be responsible to the Contractor for costs incurred by the Contractor because of delays, improperly timed activities, damage to the Work or defective construction of a separate contractor.

ARTICLE 13 CHANGES IN THE WORK

§ 13.1 By appropriate Modification, changes in the Work may be accomplished after execution of the Contract. The Owner, without invalidating the Contract, may order changes in the Work within the general scope of the Contract consisting of additions, deletions or other revisions, with the Contract Sum and Contract Time being adjusted accordingly. Such changes in the Work shall be authorized by written Change Order signed by the Owner andContractor.

(Paragraphs deleted)

§ 13.4 If concealed or unknown physical conditions are encountered at the site that differ materially from those indicated in the Contract Documents or from those conditions ordinarily found to exist, the Contract Sum and Contract Time shall be equitably adjusted as mutually agreed between the Owner and Contractor; provided that the Contractor provides notice to the Owner promptly and before conditions are disturbed.

ARTICLE 14 TIME

§ 14.1 Time limits stated in the Contract Documents are of the essence of the Contract. By executing the Agreement the Contractor confirms that the Contract Time is a reasonable period for performing the Work.

§ 14.2 Unless otherwise provided, Contract Time is the period of time, including authorized adjustments, allotted in the Contract Documents for Substantial Completion of the Work.

§ 14.3 The term "day" as used in the Contract Documents shall mean calendar day unless otherwise specifically defined.

§ 14.4 The date of Substantial Completion is the date certified by the Architect in accordance with Section 15.4.3.

§ 14.5 If the Contractor is delayed at any time in the commencement or progress of the Work by changes ordered in the Work, by labor disputes, fire, unusual delay in deliveries, abnormal adverse weather conditions not reasonably anticipatable, unavoidable casualties or any causes beyond the Contractor's control, or by other causes which the Owner determines may justify delay, then the Contract Time shall be extended by Change Order for such reasonable time as the Architect may determine, subject to the provisions of Article 21.

AIA Document A107™ – 2007. Copyright © 1936, 1951, 1958, 1961, 1963, 1966, 1970, 1974, 1978, 1987, 1997 and 2007 by The American Institute of Architects. **All rights reserved. WARNING: This AIA® Document is protected by U.S. Copyright Law and International Treaties. Unauthorized reproduction or distribution of this AIA® Document, or any portion of it, may result in severe civil and criminal penalties, and will be prosecuted to the maximum extent possible under the law.** This document was produced by AIA software at 16:40:22 on 04/14/2017 under Order No.9565289397 which expires on 04/11/2018, and is not for resale.
User Notes: (910312259)

ARTICLE 15 PAYMENTS AND COMPLETION
§ 15.1 APPLICATIONS FOR PAYMENT

(Paragraph deleted)
§ 15.1.2 With each Application for Payment where the Contract Sum is based upon the Cost of the Work, or the Cost of the Work with a Guaranteed Maximum Price, the Contractor shall submit payrolls, petty cash accounts, receipted invoices or invoices with check vouchers attached, and any other evidence required by the Owner to demonstrate that cash disbursements already made by the Contractor on account of the Cost of the Work equal or exceed (1) progress payments already received by the Contractor, less (2) that portion of those payments attributable to the Contractor's Fee; plus (3) payrolls for the period covered by the present Application for Payment.

§ 15.1.3 Payments shall be made on account of materials and equipment delivered and suitably stored at the site for subsequent incorporation in the Work. If approved in advance by the Owner, payment may similarly be made for materials and equipment stored, and protected from damage, off the site at a location agreed upon in writing.

§ 15.1.4 The Contractor warrants that title to all Work covered by an Application for Payment will pass to the Owner no later than the time of payment. The Contractor further warrants that upon submittal of an Application for Payment all Work for which Certificates for Payment have been previously issued and payments received from the Owner shall, to the best of the Contractor's knowledge, information and belief, be free and clear of liens, claims, security interests or other encumbrances adverse to the Owner's interests.

(Paragraphs deleted)
§ 15.4 SUBSTANTIAL COMPLETION
§ 15.4.1 Substantial Completion is the stage in the progress of the Work when the Work or designated portion thereof is sufficiently complete in accordance with the Contract Documents so that the Owner can occupy or utilize the Work for its intended use.

§ 15.4.2 When the Contractor considers that the Work, or a portion thereof which the Owner agrees to accept separately, is substantially complete, the Contractor shall prepare and submit to the Architect a comprehensive list of items to be completed or corrected prior to final payment. Failure to include an item on such list does not alter the responsibility of the Contractor to complete all Work in accordance with the Contract Documents.

§ 15.4.3 Upon receipt of the Contractor's list, the Architect will make an inspection to determine whether the Work or designated portion thereof is substantially complete. When the Architect determines that the Work or designated portion thereof is substantially complete, the Architect will issue a Certificate of Substantial Completion which shall establish the date of Substantial Completion, establish responsibilities of the Owner and Contractor for security, maintenance, heat, utilities, damage to the Work and insurance, and fix the time within which the Contractor shall finish all items on the list accompanying the Certificate. Warranties required by the Contract Documents shall commence on the date of Substantial Completion of the Work or designated portion thereof unless otherwise provided in the Certificate of Substantial Completion.

§ 15.4.4 The Certificate of Substantial Completion shall be submitted to the Owner and Contractor for their written acceptance of responsibilities assigned to them in such Certificate. Upon such acceptance and consent of surety, if any, the Owner shall make payment of retainage applying to such Work or designated portion thereof. Such payment shall be adjusted for Work that is incomplete or not in accordance with the requirements of the Contract Documents.

§ 15.5 FINAL COMPLETION AND FINAL PAYMENT
§ 15.5.1 Upon receipt of the Contractor's written notice that the Work is ready for final inspection and acceptance and upon receipt of a final Application for Payment, the Architect will promptly make such inspection and, when the Architect finds the Work acceptable under the Contract Documents and the Contract fully performed, the Architect will promptly issue a final Certificate for Payment stating that to the best of the Architect's knowledge, information and belief, and on the basis of the Architect's on-site visits and inspections, the Work has been completed in accordance with terms and conditions of the Contract Documents and that the entire balance found to be due the Contractor and noted in the final Certificate is due and payable. The Architect's final Certificate for Payment will

AIA Document A107™ – 2007. Copyright © 1936, 1951, 1958, 1961, 1963, 1966, 1970, 1974, 1978, 1987, 1997 and 2007 by The American Institute of Architects. **All rights reserved. WARNING: This AIA® Document is protected by U.S. Copyright Law and International Treaties. Unauthorized reproduction or distribution of this AIA® Document, or any portion of it, may result in severe civil and criminal penalties, and will be prosecuted to the maximum extent possible under the law.** This document was produced by AIA software at 16:40:22 on 04/14/2017 under Order No.9565289397 which expires on 04/11/2018, and is not for resale.
User Notes: (910312259)

constitute a further representation that conditions stated in Section 15.5.2 as precedent to the Contractor's being entitled to final payment have been fulfilled.

§ 15.5.2 Final payment shall not become due until the Contractor has delivered to the Owner a complete release of all liens arising out of this Contract or receipts in full covering all labor, materials and equipment for which a lien could be filed, or a bond satisfactory to the Owner to indemnify the Owner against such lien. If such lien remains unsatisfied after payments are made, the Contractor shall refund to the Owner all money that the Owner may be compelled to pay in discharging such lien, including costs and reasonable attorneys' fees.

§ 15.5.3 The making of final payment shall constitute a waiver of claims by the Owner except those arising from

- **.1** liens, claims, security interests or encumbrances arising out of the Contract and unsettled;
- **.2** failure of the Work to comply with the requirements of the Contract Documents; or
- **.3** terms of special warranties required by the Contract Documents.

§ 15.5.4 Acceptance of final payment by the Contractor, a Subcontractor or material supplier shall constitute a waiver of claims by that payee except those previously made in writing and identified by that payee as unsettled at the time of final Application for Payment.

ARTICLE 16 PROTECTION OF PERSONS AND PROPERTY

§ 16.1 SAFETY PRECAUTIONS AND PROGRAMS

The Contractor shall be responsible for initiating, maintaining and supervising all safety precautions and programs in connection with the performance of the Contract. The Contractor shall take reasonable precautions for safety of, and shall provide reasonable protection to prevent damage, injury or loss to

- **.1** employees on the Work and other persons who may be affected thereby;
- **.2** the Work and materials and equipment to be incorporated therein, whether in storage on or off the site, under care, custody or control of the Contractor or the Contractor's Subcontractors or Sub-subcontractors; and
- **.3** other property at the site or adjacent thereto, such as trees, shrubs, lawns, walks, pavements, roadways, structures and utilities not designated for removal, relocation or replacement in the course of construction.

The Contractor shall comply with and give notices required by applicable laws, statutes, ordinances, codes, rules and regulations, and lawful orders of public authorities bearing on safety of persons and property and their protection from damage, injury or loss. The Contractor shall promptly remedy damage and loss to property caused in whole or in part by the Contractor, a Subcontractor, a sub-subcontractor, or anyone directly or indirectly employed by any of them, or by anyone for whose acts they may be liable and for which the Contractor is responsible under Sections 16.1.2 and 16.1.3, except for damage or loss attributable to acts or omissions of the Owner or Architect or by anyone for whose acts either of them may be liable, and not attributable to the fault or negligence of the Contractor. The foregoing obligations of the Contractor are in addition to the Contractor's obligations under Section 9.15.

§ 16.2 HAZARDOUS MATERIALS

§ 16.2.1 The Contractor is responsible for compliance with the requirements of the Contract Documents regarding hazardous materials. If the Contractor encounters a hazardous material or substance not addressed in the Contract Documents, and if reasonable precautions will be inadequate to prevent foreseeable bodily injury or death to persons resulting from a material or substance, including but not limited to asbestos or polychlorinated biphenyl (PCB), encountered on the site by the Contractor, the Contractor shall, upon recognizing the condition, immediately stop Work in the affected area and report the condition to the Owner. When the material or substance has been rendered harmless, Work in the affected area shall resume upon written agreement of the Owner and Contractor. By Change Order, the Contract Time shall be extended appropriately and the Contract Sum shall be increased in the amount of the Contractor's reasonable additional costs of shutdown, delay and start-up.

(Paragraph deleted)

§ 16.2.3 If, without negligence on the part of the Contractor, the Contractor is held liable by a government agency for the cost of remediation of a hazardous material or substance solely by reason of performing Work as required by the Contract Documents, the Owner shall indemnify the Contractor for all cost and expense thereby incurred.

AIA Document A107™ – 2007. Copyright © 1936, 1951, 1958, 1961, 1963, 1966, 1970, 1974, 1978, 1987, 1997 and 2007 by The American Institute of Architects. **All rights reserved. WARNING: This AIA® Document is protected by U.S. Copyright Law and International Treaties. Unauthorized reproduction or distribution of this AIA® Document, or any portion of it, may result in severe civil and criminal penalties, and will be prosecuted to the maximum extent possible under the law.** This document was produced by AIA software at 16:40:22 on 04/14/2017 under Order No.9565289397 which expires on 04/11/2018, and is not for resale.
User Notes:

ARTICLE 17 INSURANCE AND BONDS

§ 17.1 The Contractor shall purchase from, and maintain in a company or companies lawfully authorized to do business in the jurisdiction in which the Project is located, insurance for protection from claims under workers' compensation acts and other employee benefit acts which are applicable, claims for damages because of bodily injury, including death, and claims for damages, other than to the Work itself, to property which may arise out of or result from the Contractor's operations and completed operations under the Contract, whether such operations be by the Contractor or by a Subcontractor or anyone directly or indirectly employed by any of them. This insurance shall be written for not less than limits of liability specified in the Contract Documents or required by law, whichever coverage is greater, and shall include contractual liability insurance applicable to the Contractor's obligations under Section 9.15. Certificates of Insurance acceptable to the Owner shall be filed with the Owner prior to commencement of the Work. Each policy shall contain a provision that the policy will not be canceled or allowed to expire until at least 30 days' prior written notice has been given to the Owner. The Contractor shall cause the commercial liability coverage required by the Contract Documents to include: (1) the Owner, the Architect and the Architect's Consultants as additional insureds for claims caused in whole or in part by the Contractor's negligent acts or omissions during the Contractor's operations; and (2) the Owner as an additional insured for claims caused in whole or in part by the Contractor's negligent acts or omissions during the Contractor's completed operations.

§ 17.2 OWNER'S LIABILITY INSURANCE

The Owner shall be responsible for purchasing and maintaining the Owner's usual liability insurance.

§ 17.3 PROPERTY INSURANCE

§ 17.3.1 Unless otherwise provided, the Owner shall purchase and maintain, in a company or companies lawfully authorized to do business in the jurisdiction in which the Project is located, property insurance on an "all-risk" or equivalent policy form, including builder's risk, in the amount of the initial Contract Sum, plus the value of subsequent modifications and cost of materials supplied and installed by others, comprising total value for the entire Project at the site on a replacement cost basis without optional deductibles. Such property insurance shall be maintained, unless otherwise provided in the Contract Documents or otherwise agreed in writing by all persons and entities who are beneficiaries of such insurance, until final payment has been made as provided in Section 15.5 or until no person or entity other than the Owner has an insurable interest in the property required by this Section 17.3.1 to be covered, whichever is later. This insurance shall include interests of the Owner, the Contractor, Subcontractors and sub-subcontractors in the Project.

§ 17.3.2 The Owner shall file a copy of each policy with the Contractor before an exposure to loss may occur. Each policy shall contain a provision that the policy will not be canceled or allowed to expire, and that its limits will not be reduced, until at least 30 days' prior written notice has been given to the Contractor.

§ 17.3.3 The Owner and Contractor waive all rights against (1) each other and any of their subcontractors, sub-subcontractors, agents and employees, each of the other, and (2) the Architect, Architect's consultants, separate contractors described in Article 12, if any, and any of their subcontractors, sub-subcontractors, agents and employees for damages caused by fire or other causes of loss to the extent covered by property insurance obtained pursuant to Section 17.3 or other property insurance applicable to the Work, except such rights as they have to proceeds of such insurance held by the Owner as fiduciary. The Owner or Contractor, as appropriate, shall require of the Architect, Architect's consultants, separate contractors described in Article 12, if any, and the subcontractors, sub-subcontractors, agents and employees of any of them, by appropriate agreements, written where legally required for validity, similar waivers each in favor of other parties enumerated herein. The policies shall provide such waivers of subrogation by endorsement or otherwise. A waiver of subrogation shall be effective as to a person or entity even though that person or entity would otherwise have a duty of indemnification, contractual or otherwise, did not pay the insurance premium directly or indirectly, and whether or not the person or entity had an insurable interest in the property damaged.

§ 17.3.4 A loss insured under the Owner's property insurance shall be adjusted by the Owner as fiduciary and made payable to the Owner as fiduciary for the insureds, as their interests may appear, subject to requirements of any applicable mortgagee clause. The Contractor shall pay Subcontractors their just shares of insurance proceeds received by the Contractor, and by appropriate agreements, written where legally required for validity, shall require Subcontractors to make payments to their sub-subcontractors in similar manner.

AIA Document A107™ – 2007. Copyright © 1936, 1951, 1958, 1961, 1963, 1966, 1970, 1974, 1978, 1987, 1997 and 2007 by The American Institute of Architects. **All rights reserved. WARNING: This AIA® Document is protected by U.S. Copyright Law and International Treaties. Unauthorized reproduction or distribution of this AIA® Document, or any portion of it, may result in severe civil and criminal penalties, and will be prosecuted to the maximum extent possible under the law.** This document was produced by AIA software at 16:40:22 on 04/14/2017 under Order No.9565289397 which expires on 04/11/2018, and is not for resale.
User Notes:

§ 17.4 PERFORMANCE BOND AND PAYMENT BOND

§ 17.4.1 The Owner shall have the right to require the Contractor to furnish bonds covering faithful performance of the Contract and payment of obligations arising thereunder as stipulated in bidding requirements or specifically required in the Contract Documents on the date of execution of the Contract.

§ 17.4.2 Upon the request of any person or entity appearing to be a potential beneficiary of bonds covering payment of obligations arising under the Contract, the Contractor shall promptly furnish a copy of the bonds or shall authorize a copy to be furnished.

ARTICLE 18 CORRECTION OF WORK

§ 18.1 The Contractor shall promptly correct Work rejected by the Architect or failing to conform to the requirements of the Contract Documents, whether discovered before or after Substantial Completion and whether or not fabricated, installed or completed. Costs of correcting such rejected Work, including additional testing and inspections, the cost of uncovering and replacement, and compensation for the Architect's services and expenses made necessary thereby, shall be at the Contractor's expense, unless compensable under Section A.2.7.3 in Exhibit A, Determination of the Cost of the Work.

§ 18.2 In addition to the Contractor's obligations under Section 9.4, if, within one year after the date of Substantial Completion of the Work or designated portion thereof or after the date for commencement of warranties established under Section 15.4.3, or by terms of an applicable special warranty required by the Contract Documents, any of the Work is found to be not in accordance with the requirements of the Contract Documents, the Contractor shall correct it promptly after receipt of written notice from the Owner to do so unless the Owner has previously given the Contractor a written acceptance of such condition. The Owner shall give such notice promptly after discovery of the condition. During the one-year period for correction of Work, if the Owner fails to notify the Contractor and give the Contractor an opportunity to make the correction, the Owner waives the rights to require correction by the Contractor and to make a claim for breach of warranty.

§ 18.3 If the Contractor fails to correct nonconforming Work within a reasonable time, the Owner may correct it in accordance with Section 8.3.

§ 18.4 The one-year period for correction of Work shall be extended with respect to portions of Work first performed after Substantial Completion by the period of time between Substantial Completion and the actual completion of that portion of the Work.

§ 18.5 The one-year period for correction of Work shall not be extended by corrective Work performed by the Contractor pursuant to this Article 18.

ARTICLE 19 MISCELLANEOUS PROVISIONS

§ 19.1 ASSIGNMENT OF CONTRACT

Neither party to the Contract shall assign the Contract without written consent of the other, except that the Owner may, without consent of the Contractor, assign the Contract to a lender providing construction financing for the Project if the lender assumes the Owner's rights and obligations under the Contract Documents. The Contractor shall execute all consents reasonably required to facilitate such assignment.

§ 19.2 GOVERNING LAW

The Contract shall be governed by the law of the place where the Project is located, except, that if the parties have selected arbitration as the method of binding dispute resolution, the Federal Arbitration Act shall govern Section 21.4.

§ 19.3 TESTS AND INSPECTIONS

Tests, inspections and approvals of portions of the Work required by the Contract Documents or by applicable laws, statutes, ordinances, codes, rules and regulations or lawful orders of public authorities shall be made at an appropriate time. Unless otherwise provided, the Contractor shall make arrangements for such tests, inspections and approvals with an independent testing laboratory or entity acceptable to the Owner, or with the appropriate public authority, and shall bear all related costs of tests, inspections and approvals. The Contractor shall give the Architect timely notice of when and where tests and inspections are to be made so that the Architect may be present for such procedures. The Owner shall bear costs of (1) tests, inspections or approvals that do not become requirements until

AIA Document A107™ – 2007. Copyright © 1936, 1951, 1958, 1961, 1963, 1966, 1970, 1974, 1978, 1987, 1997 and 2007 by The American Institute of Architects. **All rights reserved. WARNING: This AIA® Document is protected by U.S. Copyright Law and International Treaties. Unauthorized reproduction or distribution of this AIA® Document, or any portion of it, may result in severe civil and criminal penalties, and will be prosecuted to the maximum extent possible under the law.** This document was produced by AIA software at 16:40:22 on 04/14/2017 under Order No.9565289397 which expires on 04/11/2018, and is not for resale.
User Notes:

after bids are received or negotiations concluded, and (2) tests, inspections or approvals where building codes or applicable laws or regulations prohibit the Owner from delegating the costs to the Contractor.

§ 19.4 COMMENCEMENT OF STATUTORY LIMITATION PERIOD

The Owner and Contractor shall commence all claims and causes of action, whether in contract, tort, breach of warranty or otherwise, against the other arising out of or related to the Contract in accordance with the requirements of the final dispute resolution method selected in the Agreement within the period specified by applicable law, but in any case not more than 10 years after the date of Substantial Completion of the Work. The Owner and Contractor waive all claims and causes of action not commenced in accordance with this Section 19.4.

ARTICLE 20 TERMINATION OF THE CONTRACT

§ 20.1 TERMINATION BY THE CONTRACTOR

If the Architect fails to certify payment as provided in Section 15.2.1 for a period of 30 days through no fault of the Contractor, or if the Owner fails to make payment as provided in Section 4.1.3 for a period of 30 days, the Contractor may, upon seven additional days' written notice to the Owner and the Architect, terminate the Contract and recover from the Owner payment for Work executed, including reasonable overhead and profit, costs incurred by reason of such termination, and damages.

§ 20.2 TERMINATION BY THE OWNER FOR CAUSE

§ 20.2.1 The Owner may terminate the Contract if the Contractor

- **.1** repeatedly refuses or fails to supply enough properly skilled workers or proper materials;
- **.2** fails to make payment to Subcontractors for materials or labor in accordance with the respective agreements between the Contractor and the Subcontractors;
- **.3** repeatedly disregards applicable laws, statutes, ordinances, codes, rules and regulations or lawful orders of a public authority; or
- **.4** otherwise is guilty of substantial breach of a provision of the Contract Documents.

§ 20.2.2 When any of the above reasons exists, the Owner, upon certification by the Architect that sufficient cause exists to justify such action, may, without prejudice to any other remedy the Owner may have and after giving the Contractor seven days' written notice, terminate the Contract and take possession of the site and of all materials, equipment, tools, and construction equipment and machinery thereon owned by the Contractor and may finish the Work by whatever reasonable method the Owner may deem expedient. Upon request of the Contractor, the Owner shall furnish to the Contractor a detailed accounting of the costs incurred by the Owner in finishing the Work.

§ 20.2.3 When the Owner terminates the Contract for one of the reasons stated in Section 20.2.1, the Contractor shall not be entitled to receive further payment until the Work is finished.

§ 20.2.4 If the unpaid balance of the Contract Sum exceeds costs of finishing the Work, including compensation for the Architect's services and expenses made necessary thereby, and other damages incurred by the Owner and not expressly waived, such excess shall be paid to the Contractor. If such costs and damages exceed the unpaid balance, the Contractor shall pay the difference to the Owner. The amount to be paid to the Contractor or Owner, as the case may be, shall be certified by the Architect, upon application, and this obligation for payment shall survive termination of the Contract.

§ 20.3 TERMINATION BY THE OWNER FOR CONVENIENCE

The Owner may, at any time, terminate the Contract for the Owner's convenience and without cause. The Contractor shall be entitled to receive payment for Work executed, and costs incurred by reason of such termination, along with reasonable overhead and profit on the Work not executed.

ARTICLE 21 CLAIMS AND DISPUTES

§ 21.1 Claims, disputes and other matters in question arising out of or relating to this Contract, including those alleging an error or omission by the Architect but excluding those arising under Section 16.2, shall be referred initially to the Architect for decision. Such matters, except those waived as provided for in Section 21.8 and Sections 15.5.3 and 15.5.4, shall, after initial decision by the Architect or 30 days after submission of the matter to the Architect, be subject to mediation as a condition precedent to binding dispute resolution.

AIA Document A107™ – 2007. Copyright © 1936, 1951, 1958, 1961, 1963, 1966, 1970, 1974, 1978, 1987, 1997 and 2007 by The American Institute of Architects. **All rights reserved. WARNING: This AIA® Document is protected by U.S. Copyright Law and International Treaties. Unauthorized reproduction or distribution of this AIA® Document, or any portion of it, may result in severe civil and criminal penalties, and will be prosecuted to the maximum extent possible under the law.** This document was produced by AIA software at 16:40:22 on 04/14/2017 under Order No.9565289397 which expires on 04/11/2018, and is not for resale.
User Notes:

§ 21.2 If a claim, dispute or other matter in question relates to or is the subject of a mechanic's lien, the party asserting such matter may proceed in accordance with applicable law to comply with the lien notice or filing deadlines.

(Paragraphs deleted)

§ 21.8 CLAIMS FOR CONSEQUENTIAL DAMAGES

The Contractor and Owner waive claims against each other for consequential damages arising out of or relating to this Contract. This mutual waiver includes

- **.1** damages incurred by the Owner for rental expenses, for losses of use, income, profit, financing, business and reputation, and for loss of management or employee productivity or of the services of such persons; and
- **.2** damages incurred by the Contractor for principal office expenses including the compensation of personnel stationed there, for losses of financing, business and reputation, and for loss of profit except anticipated profit arising directly from the Work.

This mutual waiver is applicable, without limitation, to all consequential damages due to either party's termination in accordance with Article 20. Nothing contained in this Section 21.8 shall be deemed to preclude an award of liquidated damages, when applicable, in accordance with the requirements of the Contract Documents.

This Agreement entered into as of the day and year first written above.

OWNER *(Signature)*	**CONTRACTOR** *(Signature)*
(Printed name and title)	*(Printed name and title)*

AIA Document A107™ – 2007. Copyright © 1936, 1951, 1958, 1961, 1963, 1966, 1970, 1974, 1978, 1987, 1997 and 2007 by The American Institute of Architects. **All rights reserved. WARNING: This AIA® Document is protected by U.S. Copyright Law and International Treaties. Unauthorized reproduction or distribution of this AIA® Document, or any portion of it, may result in severe civil and criminal penalties, and will be prosecuted to the maximum extent possible under the law.** This document was produced by AIA software at 16:40:22 on 04/14/2017 under Order No.9565289397 which expires on 04/11/2018, and is not for resale.
User Notes:

§ 21.2 If a claim, dispute or other matter in question relates to or is the subject of a mechanic's lien, the party asserting such matter may proceed in accordance with applicable law to comply with the lien notice or filing deadlines.

(Paragraphs deleted)

§ 21.8 CLAIMS FOR CONSEQUENTIAL DAMAGES

The Contractor and Owner waive claims against each other for consequential damages arising out of or relating to this Contract. This mutual waiver includes

.1 damages incurred by the Owner for rental expenses, for losses of use, income, profit, financing, business and reputation, and for loss of management or employee productivity or of the services of such persons; and

.2 damages incurred by the Contractor for principal office expenses including the compensation of personnel stationed there, for losses of financing, business and reputation, and for loss of profit except anticipated profit arising directly from the Work.

This mutual waiver is applicable, without limitation, to all consequential damages due to either party's termination in accordance with Article 20. Nothing contained in this Section 21.8 shall be deemed to preclude an award of liquidated damages, when applicable, in accordance with the requirements of the Contract Documents.

This Agreement entered into as of the day and year first written above.

OWNER *(Signature)*	**CONTRACTOR** *(Signature)*
Matthew Birnie	DUSTIN S. RIDALE - PRESIDENT
(Printed name and title)	*(Printed name and title)*

AIA Document A107™ – 2007. Copyright © 1936, 1951, 1958, 1961, 1963, 1966, 1970, 1974, 1978, 1987, 1997 and 2007 by The American Institute of Architects. All rights reserved. WARNING: This AIA® Document is protected by U.S. Copyright Law and International Treaties. Unauthorized reproduction or distribution of this AIA® Document, or any portion of it, may result in severe civil and criminal penalties, and will be prosecuted to the maximum extent possible under the law. This document was produced by AIA software at 16:40:22 on 04/14/2017 under Order No.9565289397 which expires on 04/11/2018, and is not for resale.
User Notes:

Gunnison County

CNG Fill Station / 508 Tomichi Ave, Gunnison CO

Vicinity Map - Gunnison, Colorado

N.T.S.

Scope of Work

BUILD NEW CNG FUELING FACILITY INCLUDING ONE (1) TWIN-HOSE CNGPUBLIC FUELING DISPENSER, ONE (1) NEW 200 HP CNG COMPRESSOR, ONE (1) NEW 75 HP Hy-C COMPRESSOR, THREE (3) NEW CNG STORAGE VESSELS, ONE (1) NEW NATURAL GAS DRYER, ONE (1) NEW CNG PUBLIC VALVE PANEL, ELECTRICAL DISTRIBUTION, AND PLC CONTROLS.

THE MAIN FOUNDATION WILL BE POURED CONCRETE, SLAB ON GRADE WITH THICKENED EDGE, INCLOSED IN NEW CMU WALL SURROUNDING THE EQUIPMENT AREA.

SGM

118 West Sixth Street, Suite 200
Glenwood Springs, CO 81601
970.945.1004 www.sgm-inc.com

Project Engineer

Jeff Grebe, P.E. 26072

Owner / Applicant

Gunnison Coutny

200 E. Virginia
Gunnison, CO 81230

John Cattles, Director

CODES AND STANDARDS

1. INTERNATIONAL BUILDING CODE, 2009.
2. INTERNATIONAL MECHANICAL CODE, 2009.
3. INTERNATIONAL FIRE CODE, 2009.
4. NATIONAL ELECTRICAL CODE 2008.
5. NATIONAL FIRE PROTECTION ASSOCIATION (NFPA).
   - A) NFPA 52, 2010 EDITION : COMPRESSED NATURAL GAS (CNG) VEHICULARE FUEL SYSTEMS CODE.
   - B) NFPA 70, 2008 EDITION: NATIONAL ELECTRIC CODE AMENDMENTS, AS APPLICABLE.
   - C) NFPA 30A, 2008 EDITION: CODE FOR MOTOR FUEL DISPENSING FACILITIES AND REPAIR GARAGES.
6. INTERNATIONAL FIRE CODE, WITH LOCAL AMENDMENTS.
   - A) IFC 2308.7
7. OCCUPATIONAL SAFETY AND HEALTH ACT (WORK AREA SOUND-LEVEL LIMITS).
8. ANSI/ASME B31.3-2002 PROCESS PIPING.
9. AMERICAN SOCIETY OF MECHANICAL ENGINEERS (ASME) BOILER AND PRESSURE VVESSEL CODE, 2004 EDITION.
   - A) SECTION V: NONDESTRUCTIVE EXAMINATION.
   - B) SECTION VII: PRESSURE VESSELS - DIVISION 1.
   - C) SECTION VIII: PRESSURE VESSELS - DIVISION 2 - ALTERNATIVE FUELS.
10. AMERICAN SOCIETY FOR TESTING AND MATERIALS (ASTM).
11. AMERICAN WELDING SOCIETY (AWS) D1.1-88: STRUCTURAL WELDING CODE - STEEL.

Construction Set

March 2017

Sheet Index

C-00 Gunnison CNG Cover Sheet
C-01 Civil Site Plan
C-02 Civil Details
~~C-03 Civil Notes~~
E-01 Enlarged Electrical Plan
E-02 Electrical Conduit Schedule
E-03 Electrical One-Line
E-04 Hazardous Area
E-05 Grounding Layout
E-06 Grounding Details
E-07 Panel Schedules
E-08 Control & Communication Elevations
E-09 Compressor Conduit Details - Equipment Schedules
E-10 HYC Compressor & Dryer Conduit Details
E-11 Dispenser Conduit Details
E-12 Network Riser Diagram
E-13 Notes
E-14 Notes
E-15 Notes
E-16 Notes
E-17 Legend
E-18 Notes
M-01 Overall Piping Plan
M-02 Suction Piping Plan
M-03 High Pressure Tubing Plan
M-04 Air Piping Plan
M-05 Piping & Instrumentation Diagram
M-06 Valve Panel Piping Details
M-07 Gas Dryer Piping Details
M-08 Dispenser Area Piping Details
M-09 Compressor Piping Details - Equipment Schedules
M-10 HYC Compressor Piping Details
M-11 Piping Schedules
M-12 Piping Specifications

CO Gunnison - Tomichi Ave.				
CO Gunnison - Tomichi Ave. : REVISIONS LOG				
DATE	REVISION DELTA	PAGE NUMBER	COMPLETED BY	REVISION DESCRIPTION

811 Know what's below. Call before you dig.

CNCC 1-800-922-1987

#	Revision	Date	By
1	Trillium Final Review #1	04/12/2017	

Job #. 2016-235.001 File: GunnisonCNG-Mech

I:\2016\2016-235-GUNNISON\C3D\01-DESIGN\01-CIVIL\MEP\WORKING\GUNNISONCNG-MECH.DWG Plotted 4/13/2017 8:44 AM By: Ty Costello

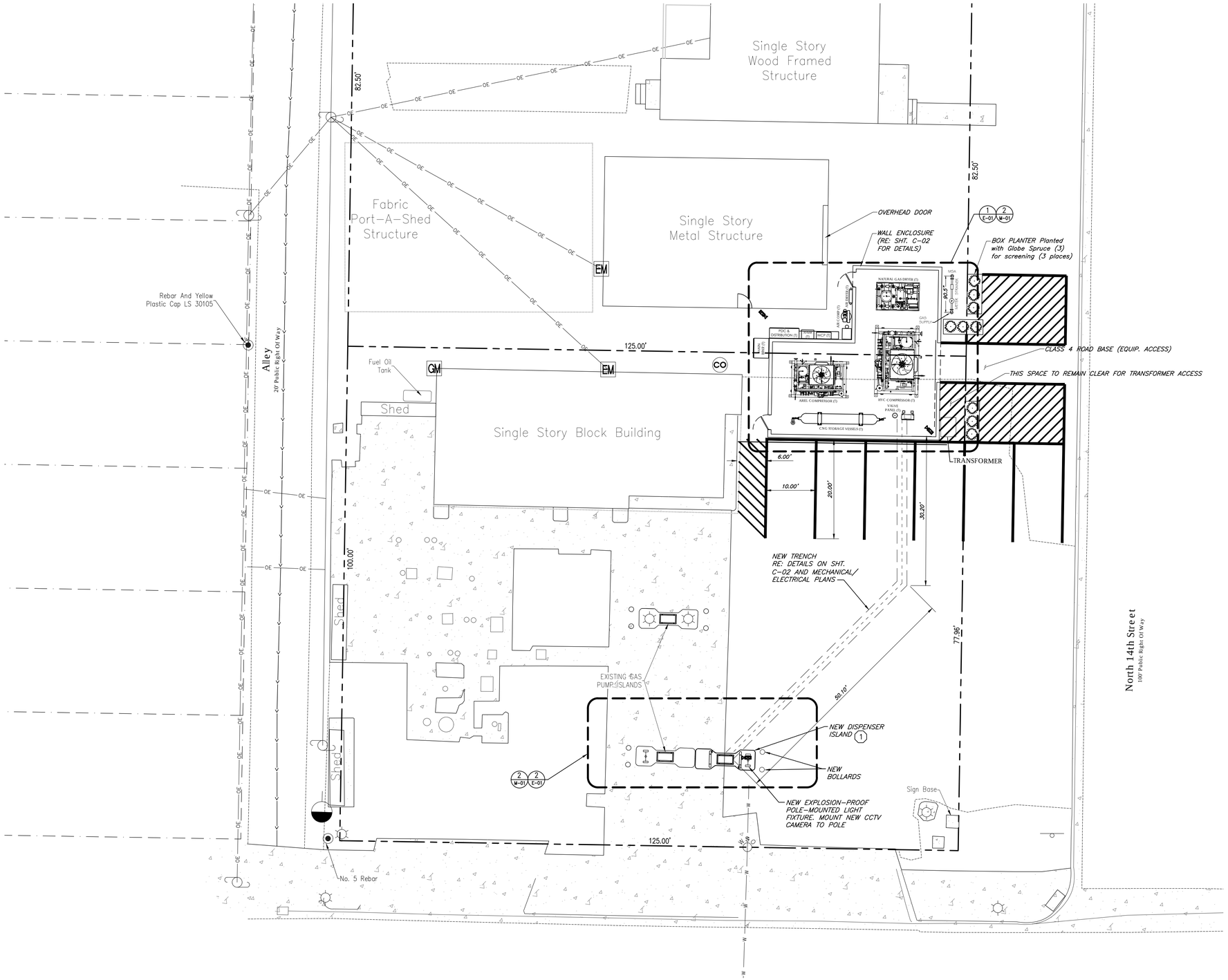

GENERAL NOTES

1. ALL HOT MIX ASPHALT SHALL BE IN ACCORDANCE WITH THE COLORADO DEPARTMENT OF TRANSPORTATION, STANDARD SPECIFICATIONS FOR ROAD AND BRIDGE CONSTRUCTION, DATED 2011, AND AS SUBSEQUENTLY REVISED; THE STANDARD PLANS, DATED JULY 2012, AND AS SUBSEQUENTLY REVISED.
2. THE CONTRACTOR SHALL LIMIT CONSTRUCTION ACTIVITIES TO THOSE AREAS WITHIN THE LIMITS OF DISTURBANCE AS SHOWN ON THE PLANS AND DESCRIBED AT THE PRECONSTRUCTION MEETING. THE CONTRACTOR AT THE CONTRACTOR'S EXPENSE SHALL RESTORE ANY DISTURBANCE BEYOND THESE LIMITS TO ORIGINAL CONDITION. CONSTRUCTION ACTIVITIES INCLUDE THE PARKING OF VEHICLES OR EQUIPMENT, AND ANY OTHER ACTION, WHICH WOULD ALTER EXISTING CONDITIONS.
3. CONTRACTOR IS RESPONSIBLE FOR TRAFFIC CONTROL, SIGNAGE AND KEEPING THE OWNER INFORMED AS TO WHEN PAVING AND OTHER CONSTRUCTION OPERATIONS WILL TAKE PLACE. MAINTAINING ACCESS TO EXISTING GAS PUMPS IS REQUIRED.
4. SANITARY FACILITIES SHALL BE LOCATED ON SITE. SANITARY FACILITY SHALL INCLUDE CLEANING A MINIMUM OF ONCE A WEEK.
5. TYPE OF COMPACTION FOR THIS PROJECT WILL BE:
   a. BACKFILL AND CLASS 6 ROAD BASE (STANDARD PROCTOR) 95%
   b. SUBGRADE BELOW RIGID INSULATION – SCARIFY AND COMPACT TO 95% STANDARD PROCTOR (SEE NOTE 7 BELOW)
6. WATER FOR COMPACTION AND CONSTRUCTION IS NOT AVAILABLE FROM SOURCES ON SITE.
7. PRIOR TO PLACEMENT OF RIGID INSULATION BELOW SLAB, PROOF ROLLING OF THE SUBGRADE SHALL BE PERFORMED. PROOF ROLLING SHALL BE ACCOMPLISHED WITH A LOADED 2000 GALLON WATER TRUCK OR EQUIVALENT AND SHALL OBSERVED BY THE ENGINEER OR OWNERS APPOINTED REPRESENTATIVE. AREAS NOT PASSING THE PROOF ROLL SHALL BE REWORKED BY THE CONTRACTOR.
8. THE CONTRACTOR SHALL PERFORM ALL LAYOUT NECESSARY TO COMPLETE THE WORK.

KEY NOTES

1. PROVIDE NEW OPW ISLAND FORM AND PROTECTIVE CURBING TO MATCH EXISTING.

Graphic Scale

0 5 10 20

In Feet: 1" = 10'

- LEGEND -

- Found Rebar & Plastic Cap, LS xxx
- EM – Electric Meter
- GM – Gas Meter
- Light Pole
- Utility Pole
- Guy Pole
- Water Shut-off
- CO – Cleanout
- Bollard
- W—W— Water Line
- Concrete
- Asphalt paving

COLORADO LICENSED 38250 GERALD EDWARD BURGESS PROFESSIONAL ENGINEER

4/10/17

811 Know what's below. Call before you dig.

CNCC 1-800-922-1987

Preliminary Not For Construction

SGM
103 W. Tomichi Ave., Suite A
Gunnison, CO 81230
970.641.5355 www.sgm-inc.com

Gunnison County
CNG Fill Station / 508 Tomichi Ave, Gunnison CO

#	Revision	Date	By
1	Trillium Final Review #1	04/12/2017	

Civil Site Plan

Job No.	2016-235.001
Drawn by:	EB/TBS
Date:	4/12/17
QC: JB	PE: JB
File:	CNG Site Plan4-12-17

C-01 Of 33

I:\2016\2016-235-CNGStation\001-CNGStation\H-Dwgs\Civil\CNG Site Plan4-12-17.dwg

CONCRETE NOTES

1. CONCRETE SLAB AND THICKENED EDGE SHALL BE PLACED MONOLITHICALLY.
2. CONCRETE SHALL BE MEET THE FOLLOWING MINIMUM DESIGN STANDARDS.
   - 4500 PSI COMPRESSIVE STRENGTH AT 28 DAYS
   - AIR CONTENT 5 – 8 PERCENT
   - SLUMP AT TIME OF PLACEMENT SHALL NOT EXCEED 4"
   - AT MINIMUM, CONCRETE SHALL BE COVERED WITH BLACK CONCRETE BLANKETS FOR 3 FULL DAYS. WEATHER PROTECTION SHALL FOLLOW GUIDELINES OF ACI 306R–16 "GUIDE TO COLD WEATHER CONCRETING."
3. CONCRETE CRACK CONTROL JOINTS SHALL BE SAWCUT AS SOON AS SLAB HAS CURED ENOUGH TO PREVENT ROCKS FROM SPALLING. PLANS SHOW APPROXIMATE LOCATIONS. CRACK CONTROL JOINTS SHALL BE 1–1/4" DEEP.
4. SLAB REINFORCING STEEL SHALL BE GRADE 60 #4 BARS AT 16" CENTERS EACH WAY, CENTERED IN 6" SLAB. LAPS SHALL BE 18". AT SLAB TO THICKENED EDGE PLACE 12" X 12" ANGLE TURNED DOWN INTO THICKEND EDGE AS SHOWN.
5. CONCRETE FINISH SHALL BE A LIGHT BROOM FINISH WITH BROOM MARKS IN THE SAME DIRECTION AS SLAB SLOPE.

CONCRETE MASONRY UNIT (CMU) NOTES

1. UNITS SHALL BE STANDARD CMU BLOCK WALL PLACED IN A COMMON BOND WALL PATTERN WITH CONCAVE TOOLED JOINTS
2. DOWELS SHALL BE PLACED AT 24" ON CENTER IN FOOTING AND BE EXTENDED TO TOP OF WALL. ALL CELLS WITH DOWELS SHALL BE GROUTED FULL
3. BOND BEAMS PLACED AS SHOWN, MID SPAN AND AT WALL TOP. TWO #4 BARS SHALL BE PLACED CONTINUOUSLY IN BOND BEAMS.
4. REINFORCING STEEL IN CORNERS AND AT LAP SPLICES SHALL OVERLAP A MINIMUM OF 24".
5. PLACE A TOTAL OF 4 DRAINAGE SLOTS IN BOTTOM COURSE OF CMU WHERE SHOWN. DRAINAGE SLOTS CAN BE RECTANGULAR SHAPED OR 4" PVC GROUTED INTO THE CMU CELL.
6. CORNERS AND CELLS ADJACENT TO OPENING SHALL BE GROUTED AND HAVE CONTINUOUS REINFORCING.
7. DOOR LINTELS SHALL EXTEND A MINIMUM OF 16" EACH SIDE OF OPENING WITH TWO #4 BARS.
8. MASONRY CAP SHALL BE 24 GAUGE GALVANIZED OR ANODIZED METAL CAP EXTENDING DOWN EACH FACE OF WALL BY 6", TERMINATING WITH A DRIP EDGE. MASONRY CAP SHALL BE SCREWED TO EDGE OF TREATED 2X8 ANCHORED TO GROUTED CELL BY ½" J BOLT AT 48" CENTERS.

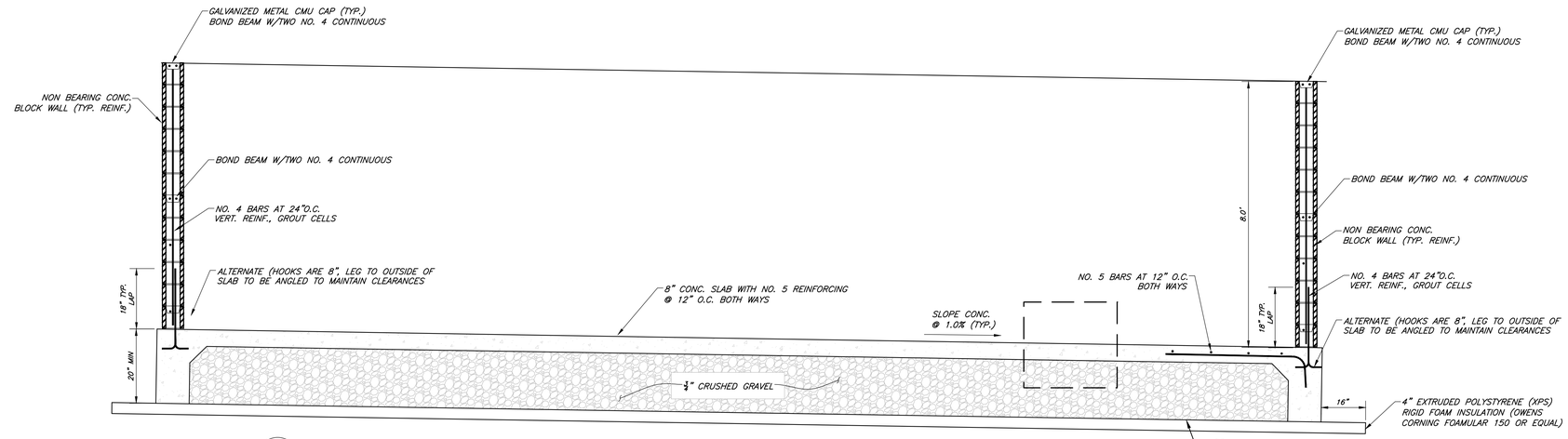

1 C 02 EQUIPMENT ENCLOSURE SECTION A–A
SCALE: N.T.S.

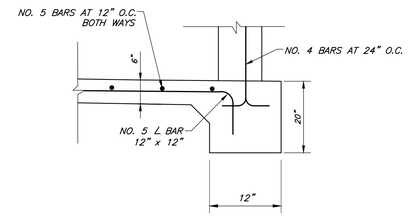

3 C 02 CONCRETE EDGE DETAIL
SCALE: N.T.S.

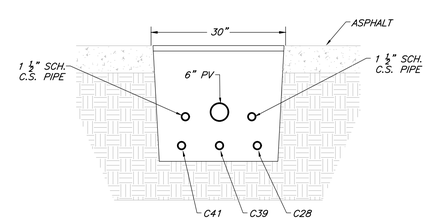

4 C 02 UTILITY LAYOUT IN TRENCH
SCALE: N.T.S.

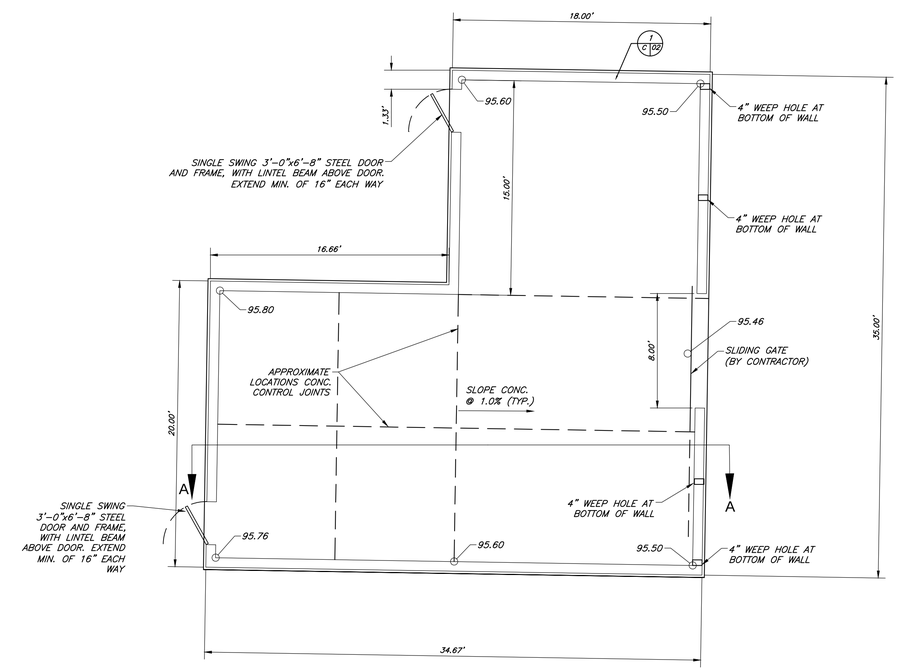

2 C 02 EQUIPMENT ENCLOSURE – PLAN
SCALE: 1" = 5'

COLORADO LICENSED GERALD EDWARD BUSCHER 38250 PROFESSIONAL ENGINEER
4/10/17

Preliminary
Not For
Construction

SGM
103 W. Tomichi Ave., Suite A
Gunnison, CO 81230
970.641.5355 www.sgm-inc.com

Gunnison County
CNG Fill Station / 508 Tomichi Ave,
Gunnison CO

#	Revision	Date	By
1	Trillium Final Review #1	04/12/2017	

Civil Details

Job No.	2016-235.001
Drawn by:	EB/TBS
Date:	4/14/17
QC: JB	PE: JB
File:	CNG Site Plan4-12-17

C-02
Of 33

I:\2016\2016-235-CNGStation\001-CNGStation\Dwgs\Civil\CNG Site Plan4-12-17.dwg

Graphic Scale

0 2' 4' 8'

Scale: 3/8" = 1'-0"

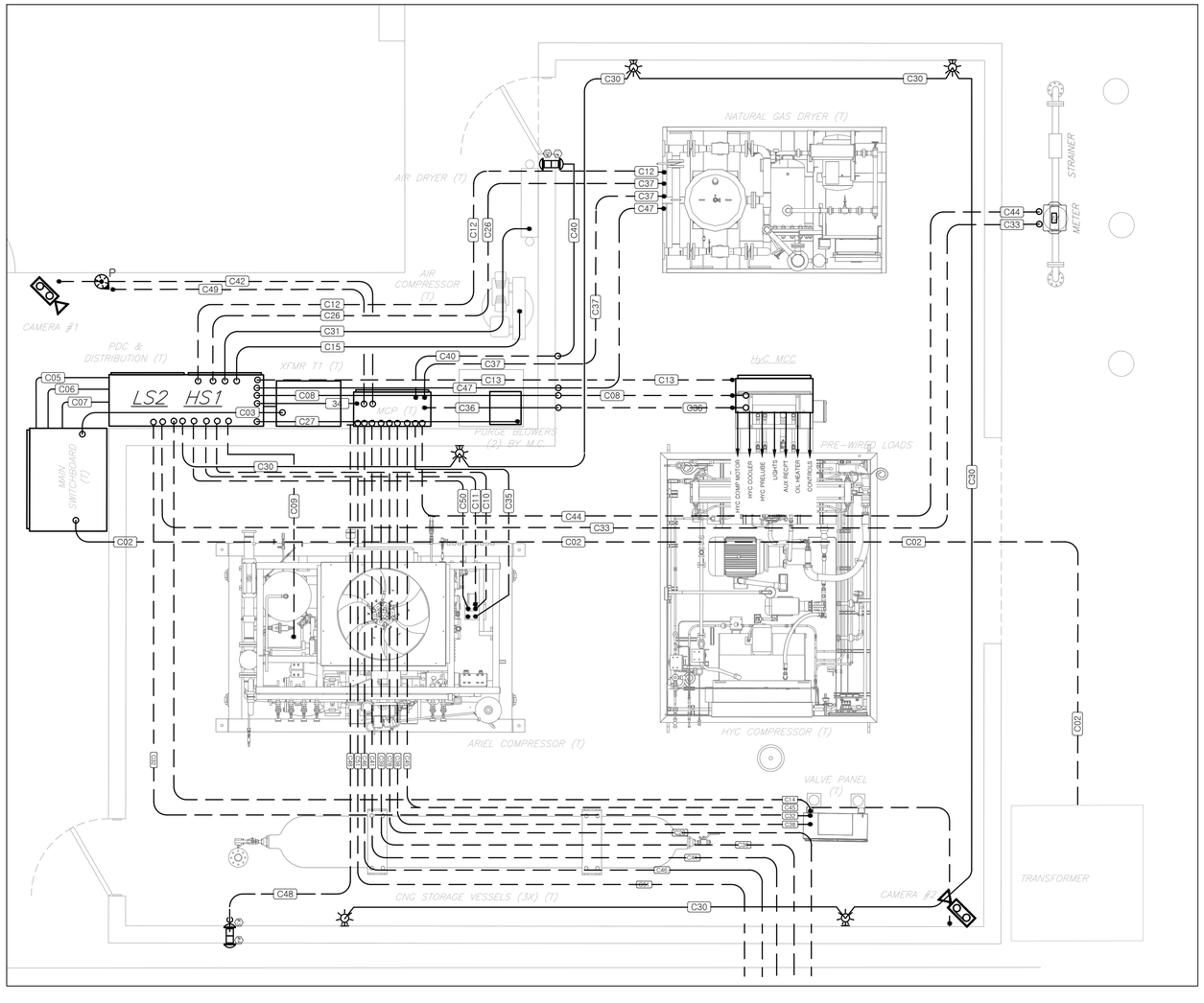

1 / E 02 EQUIPMENT AREA

SCALE: 1/4" = 1'-0"

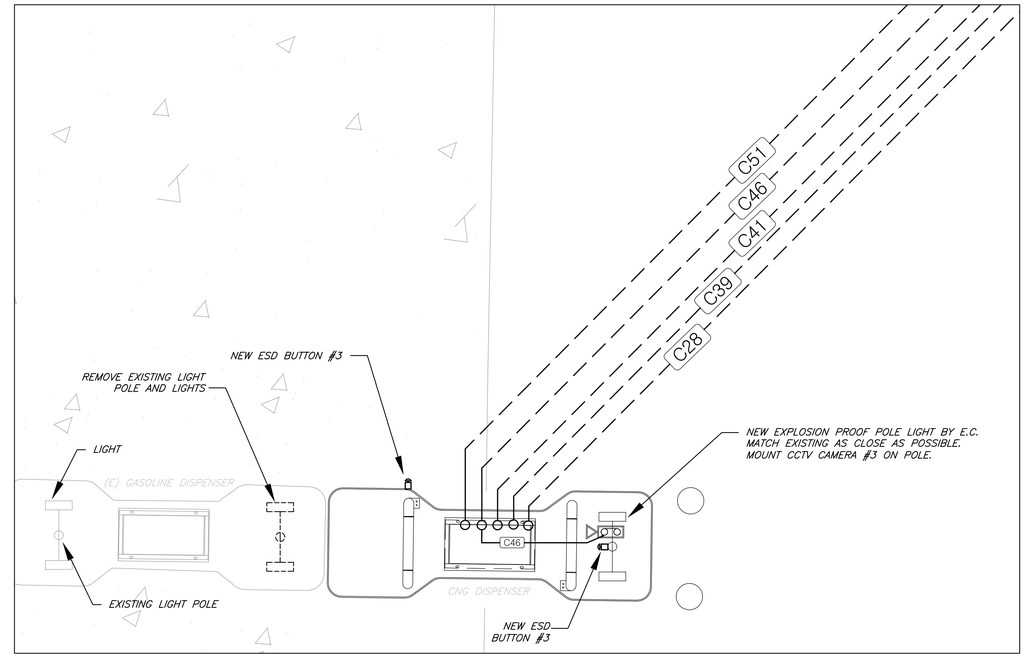

2 / E 02 DISPENSER AREA

SCALE: 1/4" = 1'-0"

COLORADO LICENSED 26072 PROFESSIONAL ENGINEER

SGM
118 West Sixth Street, Suite 200
Glenwood Springs, CO 81601
970.945.1004 www.sgm-inc.com

Gunnison County
CNG Fill Station / 508 Tomichi Ave,
Gunnison CO

#	Revision	Date	By
1	Trillium Final Review #1	04/12/2017	

Enlarged Electrical Plan

Job No.	2016-235.001
Drawn by:	TC
Date:	02/16/2017
QC: JG	PE: JG
File:	GunnisonCNG-Elec

E-01

Of 34

i:\2016\2016-235-gunnisonco\001-cngstation\1H-Dwgs\Mep\Working\GunnisonCNG-Elec.dwg Plotted: 4/13/2017 8:45 AM By: Ty Costello

GUNNISON CNG ELECTRICAL CONDUIT SCHEDULE

MARK	SIZE	QTY	DESCRIPTION	WIRE	COLOR	FROM	TO	NOTES
C01	3"	1	POWER FROM UTILITY	SELECTED AND RUN BY UTILITY		UTILITY	TRANSFORMER	
C02	3"	2	POWER FROM TRANSFORMER	(3) 250 KCMIL THWN, (1) #1/0 AWG THWN GND	SEE NOTE 16 ON E-02	TRANSFORMER	MDP SWITCH BOARD	
C03	2"	1	480 VAC TO 480-120/208 XFMR	(3) #6 AWG THWN, (1)#10 GND	SEE NOTE 16 ON E-02	MDP SWITCH BOARD	480-120/208 XFMR	
C04	2"	1	FEEDER TO TFR PANEL	(4) #1 AWG THWN, (1) #8 AWG THWN GND	SEE NOTE 16 ON E-02	TRANSFORMERT T1	PANEL TFR (IND PDC)	
C05	3"	1	COMPRESSOR BREAKER TO SOFT START	(3) 600 MCM THWN, (1) #3 AWG THWN GND	SEE NOTE 16 ON E-02	MDP SWITCH BOARD	COMPRESSOR RVSS(PDC)	
C06	1"	1	DRYER BREAKER TO CONTACTOR	(3) #4 AWG THWN, (1) #10 AWG THWN GND	SEE NOTE 16 ON E-02	SWITCH BOARD	GAS DRYER CONTRACTOR (PDC)	
C07	1"	1	PANEL HS1 FEEDER	(3) #4 AWG THWN, (1) #10 AWG THWN GND	SEE NOTE 16 ON E-02	SWITCH BOARD	PANEL HS1 (IN PDC)	
C08	2"	1	HY-C SKID POWER	(3) 3/0 AWG THWN, (1) #6 AWG THWN GND	SEE NOTE 16 ON E-02	SWITCHBOARD	HY-C MCC PANEL	
C09	3"	1	COMPRESSOR MOTOR	(3) 350 MCM THWN, (1) #2/0 AWG THWN GND	SEE NOTE 16 ON E-02	RVSS(INPDC)	COMP. #1 MOTOR	
C10	1"	1	COMPRESSOR COOLER	(9) #10 THWN, (3) #10 AWG THWN GND	SEE NOTE 16 ON E-02	HS1 (IN PDC)	COMPRESSOR COOLER	
↓	↓	↓	COMPRESSOR PRE-LUBE	↓	↓	↓	COMPRESSOR	
↓	↓	↓	COMPRESSOR BLK HEATER	↓	↓	↓	COMPRESSOR BLOCK HEATER	
C11	1"	1	SPARE	EMPTY		PDC	COMP SKID POWER BOX	
C12	1"	1	SPARE	EMPTY		PDC	GAS DRYER	
C13	1"	1	SPARE	EMPTY		PDC	SKID HY-C POWER BOX	
C14	1"	1	SPARE	EMPTY		PDC	VALVE PANEL	
C15	1"	1	AIR COMPRESSOR POWER	(3) #12 THWN, (1) #12AWG THWN GND	SEE NOTE 16 ON E-02	HS1 (IN PDC)	AIR COMPRESSOR	PREWIREDON SKID OR IN PANEL
PW	2"	1	HyC COMPRESSOR MOTOR	(3) 1/0 THWN, (1) #4 AWG THWN GND	SEE NOTE 16 ON E-02	HyC MCC	COMP. A MOTOR	PREWIREDON SKID OR IN PANEL
PW	1"	1	HyC COMPRESSOR COOLER	(3) #12 THWN, (1) #12 AWG THWN GND	SEE NOTE 16 ON E-02	HyC MCC	COOLER MOTOR	PREWIREDON SKID OR IN PANEL
PW	3/4"	1	HyC COMPRESSOR PRELUBE	(3) #12 THWN, (1) #12 AWG THWN GND	SEE NOTE 16 ON E-02	HyC MCC	PRELUBE MOTOR	PREWIREDON SKID OR IN PANEL
PW	3/4"	1	TRANSFORMER T2	2) #12 THWN, (1) #12 AWG THWN GND	SEE NOTE 16 ON E-02	HyC MCC	TRANSFORMER T2	PREWIREDON SKID OR IN PANEL
PW	3/4"	1	HyC LOW VOLTAGE PANEL	(3) #12 THWN, (1) #12 AWG THWN GND	SEE NOTE 16 ON E-02	T2	HyC LOW VOLTAGE PANEL	PREWIREDON SKID OR IN PANEL
PW	3/4"	1	HyC COMPRESSOR LIGHTS	(2) #12 THWN, (1) #12 AWG THWN GND	SEE NOTE 16 ON E-02	HyC LOW VOLTAGE PANEL	LIGHTS	PREWIREDON SKID OR IN PANEL
PW	3/4"	1	HyC COMPRESSOR AUX RECPT	(2) #12 THWN, (1) #12 AWG THWN GND	SEE NOTE 16 ON E-02	HyC LOW VOLTAGE PANEL	AUX RECEPTACLE	PREWIREDON SKID OR IN PANEL
PW	3/4"	1	HyC COMPRESSOR OIL HEATER	(2) #12 THWN, (1) #12 AWG THWN GND	SEE NOTE 16 ON E-02	HyC LOW VOLTAGE PANEL	OIL HEATER	PREWIREDON SKID OR IN PANEL
PW	3/4"	1	HyC COMPRESSORCONTROLS	(2) #12 THWN, (1) #12 AWG THWN GND	SEE NOTE 16 ON E-02	HyC LOW VOLTAGE PANEL	CONTROLS	PREWIREDON SKID OR IN PANEL
PW	2"	1	L-1, LS1	(3) #6 AWG THWN, (1)#10 GND	SEE NOTE 16 ON E-02	PANEL TFR	L1	PREWIREDON SKID OR IN PANEL
PW	2"	1	LS2	(3) #6 AWG THWN, (1)#10 GND	SEE NOTE 16 ON E-02	PANEL TFR	LS2	PREWIREDON SKID OR IN PANEL
C26	3/4"	1	DESICCANT DRYER POWER	(4) #12 THWN	SEE NOTE 16 ON E-02	PDC	DESICCANT DRYER	
C27	3/4"	1	PURGE BLOWER POWER	(3) #12 THWN	SEE NOTE 16 ON E-02	PDC	PURGE BLOWER	
C28	3/4"	1	DISPENSER POWER TWIN HOSE	(6) #12 THWN	SEE NOTE 16 ON E-02	PDC	DISPENSER	
C29	3/4"	2	ELECTRICAL ROOM OUTLETS	(3) #12 THWN	SEE NOTE 16 ON E-02	PDC	OUTLETS	
C30	1"	2	EQUIPMENT AREA LIGHTS	(4) #12 THWN	SEE NOTE 16 ON E-02	PDC	EQUIPMENT AREA AREA	
C31	1"	1	AIR DRYER HEAT TRACE	(4) #12 THWN AWG	SEE NOTE 16 ON E-02	PDC	DRYER	
C32	3/4"	1	VALVE PANEL 120V POWER	(8) #12 THWN	SEE NOTE 16 ON E-02	MCP	VALVE PANEL	
C33	3/4"	1	MSA 120V POWER	(4) #12 THWN	SEE NOTE 16 ON E-02	PDC	GAS METER	
C34	3/4"	1	MCP 120V POWER	(4) #12 THWN	SEE NOTE 16 ON E-02	PDC	MASTER CONTROL PANEL	
C35	1"	1	COMPRESSOR CONTROL	(2) CAT 5	-	MCP	COMP SKID POWER BOX	
C36	1"	1	HY-C COMPRESSOR CONTROL	(2) CAT 5 (3) #18 TWSP	-	MCP	SKID HY-C POWER BOX	
C37	3/4"	1	GAS DRYER CONTROL	(2) CAT5	-	MCP	GAS DRYER	
C38	3/4"	1	VALVE PANEL CONTROL	(6) #18 TWSP	-	MCP	VALVE PANEL	EATON ESD BUTTON 10250T7007 W/ 10250TA56 SHROUD
C39	1"	1	DISPENSER A CONTROL	(2) CAT 5 (5) #18 TWSP	-	MCP	DISPENSER	
C40	3/4"	1	EQUIPMENT AREA ESD BUTTON #1 & #2	(7) #12 THWN	SEE NOTE 16 ON E-02	DISPENSER	ESD BUTTON #1	
C41	3/4"	1	DISPENSER ESD BUTTON #3	(4) #12 THWN	SEE NOTE 16 ON E-02	MCP	ESD BUTTON #3	
C42	3/4"	1	CAMERA CONTROL AND POWER	(2) CAT-5E	-	MCP	CAMERA 1	CAT 5E WITH MALE RJ45 CONNECTORS
C43	N/A	2	COMMUNICATIONS	(1) CAT-5E	SEE NOTE 16 ON E-02	PHONE COMPANY	MCP	BORE TO PHONE COMPANY CONNECTION BOX
C44	3/4"	1	MSA COMMUNICATION	(2) CAT-5E	-	MCP	GAS METER	CAT 5E WITH MALE RJ45 CONNECTORS
C45	-	-	CAMERA #2	(2) CAT-5E	-	MCP	CAMERA 2	
C46	-	-	CAMERA #3	(2) CAT-5E	-	MCP	CAMERA 3	
C47	-	-	GAS DRYER	(3) #4, (1) #10	-	PDC	GAS DRYER	
C-48	-	-	EQUIPMENT AREA ESD BUTTONS 3 & 4	(7) #12 THWN	-	MCP	ESD 4 & 5	
C-49	1"	1	PHOTO CELL	(3) #12, (1) #12 GND	-	PDC	PHOTO CELL	
C-50	3/4 "	1	COMPRESSOR (120V)	(6) #12-THWN	-	PDC	COMPRESSOR	120V POWER
C-51	1"	1	DISPENSER SPARE-WITH PULL ROPE	(6) #12-THWN	-	PDC	DISPENSER	

1

GENERAL SHEET NOTES

1. COLORS OF WIRE ARE SHOWN IN ON E-3 ON NOTE 16A.
2. FLEXIBLE METAL CONDUIT IS NOT PERMITTED IN CLASS 1 DIVISION 1 AREAS (CLASS 1 DIV 1). THIS INCLUDES PIT CONDUITS FOR DISPENSER ELECTRICAL RUNS.

⬡ SHEET KEYNOTES

1. CONTRACTOR TO SUPPLY AND INSTALL A PHOTO CELL FOR LIGHTS.

LEGEND

PDC – POWER DISTRIBUTION CENTER
MCP – MASTER CONTROL PANEL (CONTROL)
TWSP – TWISTED SHIELDED PAIR

Construction

COLORADO LICENSED
TIMOTHY M. CASTELLO
26072
PROFESSIONAL ENGINEER

SGM
118 West Sixth Street, Suite 200
Glenwood Springs, CO 81601
970.945.1004 www.sgm-inc.com

Gunnison County
CNG Fill Station / 508 Tomichi Ave,
Gunnison CO

#	Revision	Date	By
1	Trillium Final Review #1	04/12/2017	

Electrical Conduit Schedule

Job No.	2016-235.001
Drawn by:	TC
Date:	02/16/2017
QC: JG	PE: JG
File:	GunnisonCNG-Elec

E-02

Of 34

J:\2016\2016-235-gunnisonco\001-congestation\H-Dwgs\Mep\Working\GunnisonCNG-Elec.dwg Plotted: 4/13/2017 8:45 AM By: Ty Castello

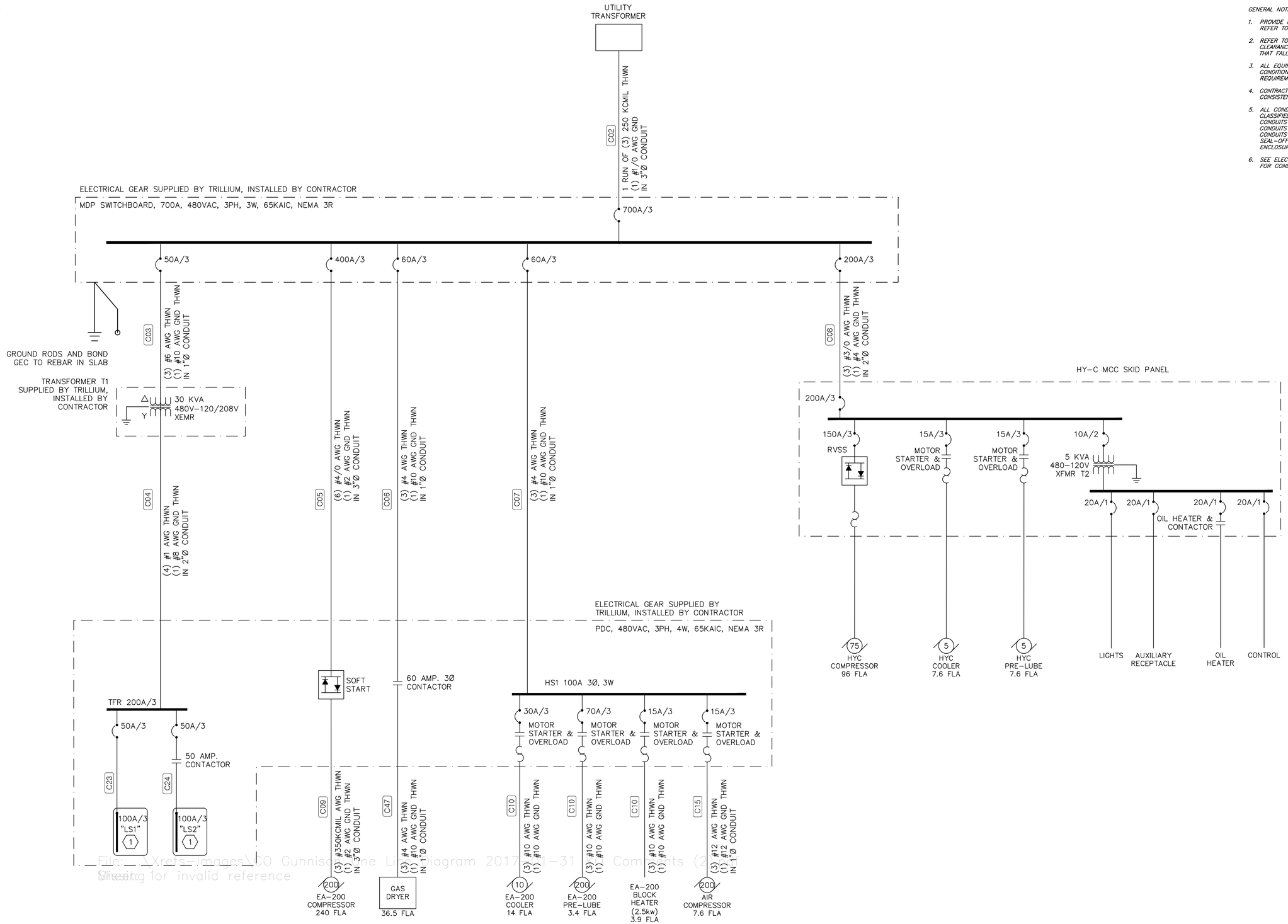

File: ...\Xrefs-Images\CO Gunnison Line Diagram 2017 (1-31) Comments (2...
Missing or invalid reference

GENERAL NOTES

1. PROVIDE NEMA 3R ENCLOSURES FOR EQUIPMENT LOCATED OUTDOORS. REFER TO PLANS FOR EQUIPMENT LOCATIONS.
2. REFER TO PLANS FOR CONSTRAINTS ON PHYSICAL DIMENSIONS AND CLEARANCE REQUIREMENTS OF EQUIPMENT. PROVIDE EQUIPMENT DIMENSIONS THAT FALL WITHIN THE CONSTRAINTS OF EACH SPECIFIC LOCATION.
3. ALL EQUIPMENT SHALL BE CONSTRUCTED AND BRACED FOR THE SEISMIC CONDITIONS OF THE PROJECT. REFER TO SPECIFICATIONS FOR REQUIREMENTS.
4. CONTRACTOR TO LABEL ALL PHASES AND TEST EACH DEVICE TO ENSURE CONSISTENT PHASING THROUGHOUT THE PROJECT.
5. ALL CONDUITS SHALL HAVE SEAL–OFFS WHERE ENTERING OR LEAVING CLASSIFIED LOCATIONS AS PER NEC SECTION 501. ALL UNDERGROUND CONDUITS SHALL HAVE A SEAL–OFF AS THE FIRST JOINT ABOVE GROUND. CONDUITS SHALL NOT BE MORE THAN 2–INCHES ABOVE GRADE. ALL CONDUITS ON EXPLOSION–PROOF FIXTURES AND ENCLOSURES SHALL HAVE SEAL–OFF ON FIRST CONDUIT INTO OR OUT OF THE FIXTURE OR ENCLOSURE.
6. SEE ELECTRICAL CONDUIT LAYOUT SHEET AND CONDUIT SCHEDULE SHEET FOR CONDUCTOR SCHEDULE.

COLORADO LICENSED
JOHN M. GIESEKE
26072
PROFESSIONAL ENGINEER

SGM
118 West Sixth Street, Suite 200
Glenwood Springs, CO 81601
970.945.1004 www.sgm-inc.com

Gunnison County
CNG Fill Station / 508 Tomichi Ave,
Gunnison CO

#	Revision	Date	By
1	Trillium Final Review #1	04/12/2017	

Electrical One-Line

Job No.	2016-235.001
Drawn by:	TC
Date:	02/16/2017
QC: JG	PE: JG
File:	GunnisonCNG-Elec

E-03

Of 34

I:\2016\2016-235-gunnisonco\207-negotiation\et-Dwgs\Mep\Working\GunnisonCNG-Elec.dwg Plotted: 4/13/2017 8:45 AM By: Ty Costello

GENERAL NOTES

1. ALL CONDUITS SHALL HAVE SEAL OFFS WHERE ENTERING OR LEAVING CLASSIFIED LOCATIONS PER NEC. 501.
2. ALL UNDERGROUND CONDUITS SHALL HAVE SEAL OFFS AS THE FIRST JOINT ABOVE GROUND IN HAZARDOUS AREAS.
3. ALL CONDUITS ON EXPLOSION PROOF FIXTURES AND ENCLOSURES SHALL HAVE SEAL OFFS ON FIRST CONDUIT INTO OR OUT OF THE FIXTURE OF ENCLOSURE.
4. FORM 5 LB FITTINGS ALLOWED TO BE USED IN C1D2 AREAS WHERE IT IS USED AS A PULL BOX FOR WIRE. SEAL OFFS ARE REQUIRED AT STUB UP AREAS AND BEFORE ENTERING WIRE TERMINATION DEVICE.
5. HAZARDOUS AREAS SHOWN PER NFPA 52–2010 TABLE 8.4.2.9 ELECTRICAL INSTALLATIONS.
6. INSIDE COMPRESSOR ENCLOSURES DEFINED AS CLASS 1 DIVISION 2 PER NFPA 52–2010.

KEYNOTES

1. NEC CLASS 1 DIVISION 1 HAZARDOUS AREA 5 FT. RADIUS FROM VENTS
2. NEC CLASS 1 DIVISION 2 HAZARDOUS AREA.
3. NFPA 52 – NEC CLASS 1 DIVISION 2 (LOCATED INSIDE COMPRESSORS).
4. EQUIPMENT VENT. VERIFY AND ADJUST IN FIELD

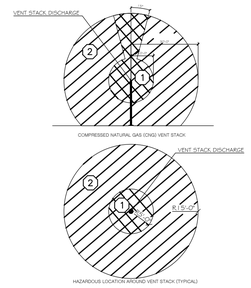

3 / E 05 VENT STACK HAZARDOUS LOCATIONS
SCALE: N.T.S.

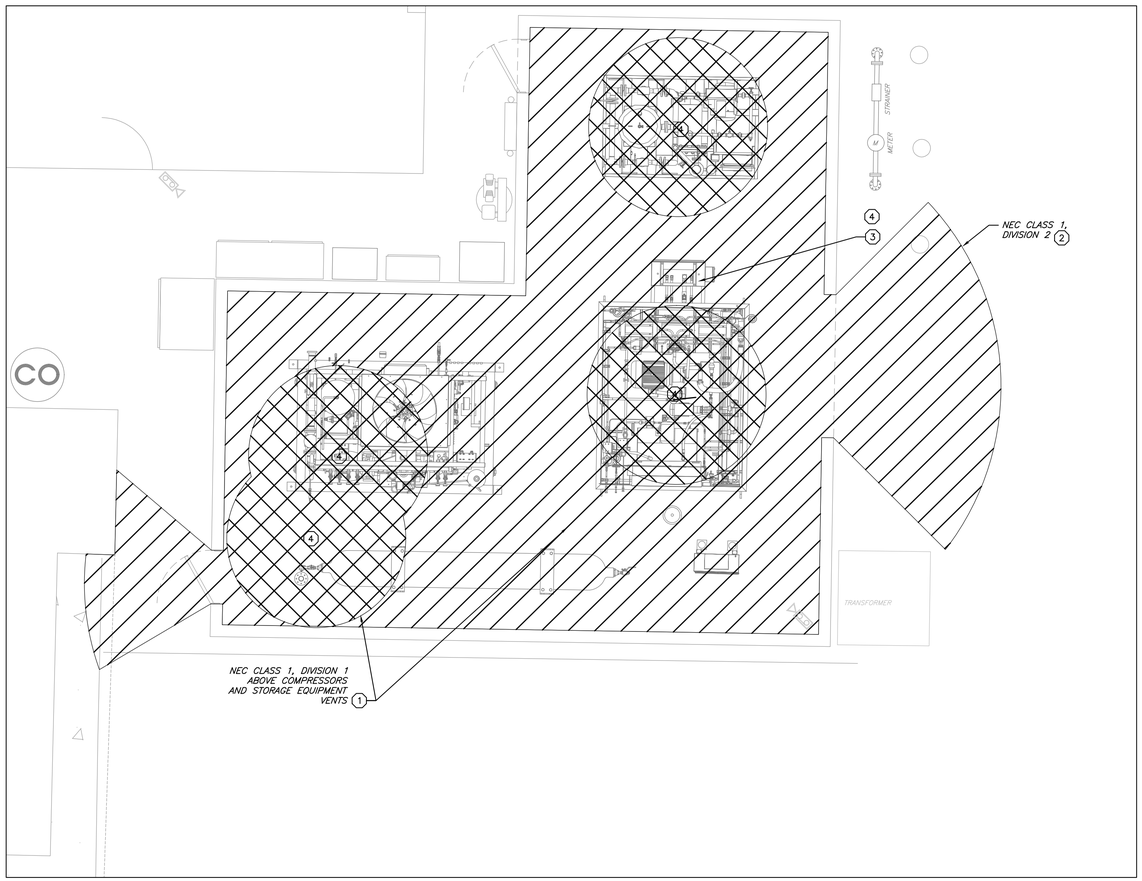

1 / E 05 EQUIPMENT AREA
SCALE: 1/4" = 1'-0"

Graphic Scale
0 4' 8'
Scale: 1/4" = 1'-0"

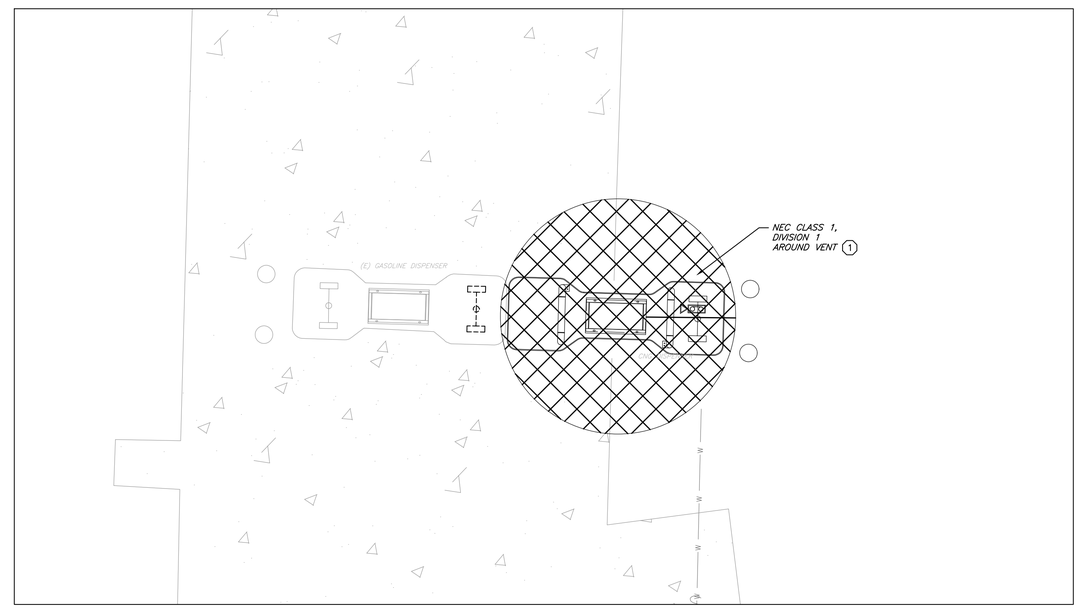

2 / E 05 DISPENSER AREA
SCALE: 1/4" = 1'-0"

Graphic Scale
0 4' 8'
Scale: 1/4" = 1'-0"

COLORADO LICENSED
JEFF M. GRIFFITH
26072
PROFESSIONAL ENGINEER

SGM
118 West Sixth Street, Suite 200
Glenwood Springs, CO 81601
970.945.1004 www.sgm-inc.com

Gunnison County
CNG Fill Station / 508 Tomichi Ave,
Gunnison CO

#	Revision	Date	By
1	Trillium Final Review #1	04/12/2017	

Hazardous Area

Job No.	2016-235.001
Drawn by:	TC
Date:	02/16/2017
QC: JG	PE: JG
File:	GunnisonCNG-Elec

E-04
Of 34

J:\2016\2016-235-gunnisonco\001-cngstation\H-Dwgs\Map\Working\GunnisonCNG-Elec.dwg Plotted: 4/13/2017 8:45 AM By: Ty Costello

GENERAL NOTES

1. ALL COPPER BELOW GRADE 2/0 MINIMUM, CONTRACTOR MAY USE LARGER.
2. ALL COPPER ABOVE GRADE 2/0.
3. ALL INTERSECTIONS TO BE BONDED.
4. ALL 2/0 COPPER COMING ABOVE GRADE MUST BE LONG ENOUGH TO TIE TO EACH SPECIFIC PIECE OF EQUIPMENT.
5. EACH STRUCTURE TO BE GROUNDED ON TWO SIDES USING COMPRESSION TWO HOLE SPADE.
6. ALL FUTURE COPPER MUST BE COILED AND PLACED ON PAD MAKING SURE SUFFICIENT LENGTHS REMAIN, TO CONNECT TO EQUIPMENT.
7. REFER TO GROUNDING DETAIL DRAWING E-6 FOR ASSEMBLY DETAILS.
8. SAWCUT, PATCH AND REPAIR PARKING LOT SURFACE AS NECESSARY.
9. THE CONTRACTOR SHALL BE REQUIRED TO COMPACT THE TRENCHES USING SPECIFIC EQUIPMENT THAT CAN COMPACT THE NARROW TRENCHES AND ACHIEVE A MINIMUM OF 95 PERCENT RELATIVE COMPACTION PER ASTM D-1557. JETTING IS NOT ALLOWED. THE TRENCH BACKFILL SHALL BE PLACED IN THIN LIFTS NOT TO EXCEED 4 INCHES IN THICKNESS IN THE NARROW TRENCHES. THE MOISTURE CONTENT SHALL RANGE FROM OPTIMUM TO 3 PERCENT ABOVE OPTIMUM MOISTURE CONTENT AT TIME PLACEMENT. THE BACKFILL MATERIAL SHALL CONFORM WITH THE ENGINEERED FILL REQUIREMENTS IN THE PROJECT GEOTECHNICAL ENGINEERING REPORT, THE REQUIREMENTS OF THE PIPE MANUFACTURER, AND THE PROJECT SPECIFICATIONS, WHICHEVER IS MORE STRINGENT.
10. GROUND GRID CONDUCTORS SHALL BE BURIED A MINIMUM OF 1'-6" BELOW FINAL EARTH GRADE.
11. GROUND RODS SHOULD BE INSTALLED WITH TOPS 1'-0" MINIMUM BELOW GRADE AND BONDED TO THE GROUND GRID CONDUCTORS.
12. REFER TO SPECIFICATIONS FOR INSTALLATION AND MATERIAL REQUIREMENTS.
13. ALL BENDS SHOWN SHALL BE 4" MINIMUM RADIUS.
14. CONTRACTOR TO RECORD CONDUCTOR LAYOUT ON AS BUILT DRAWINGS.
15. GROUNDING IN FUEL DISPENSER AREA RUN OVERHEAD IN CONDUIT FROM FUEL BUILDING PULL BOX TO FUEL DISPENSERS.

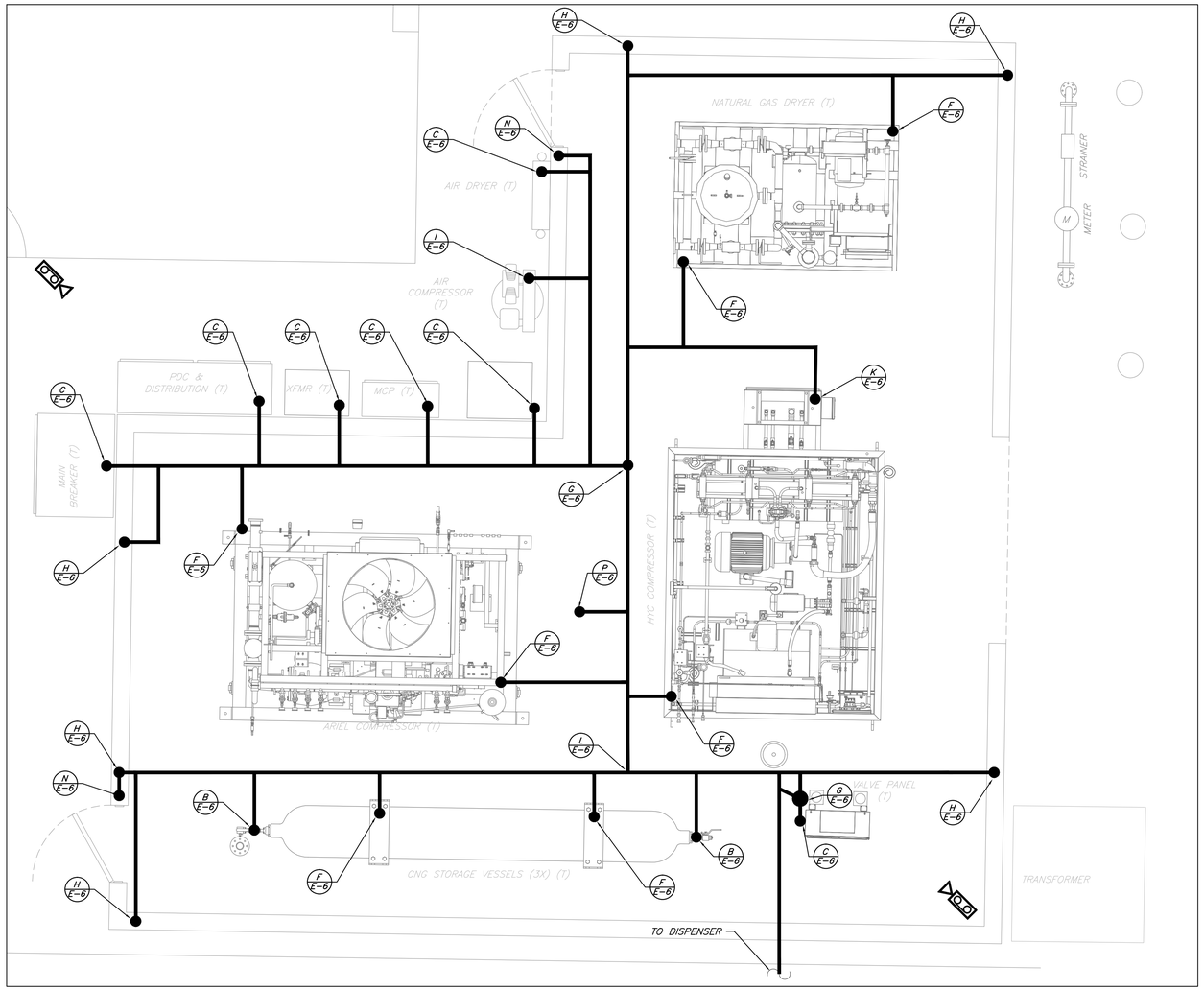

1 E 06 EQUIPMENT AREA
SCALE: 3/8" = 1'-0"

Graphic Scale
0 2' 4' 8'
Scale: 3/8" = 1'-0"

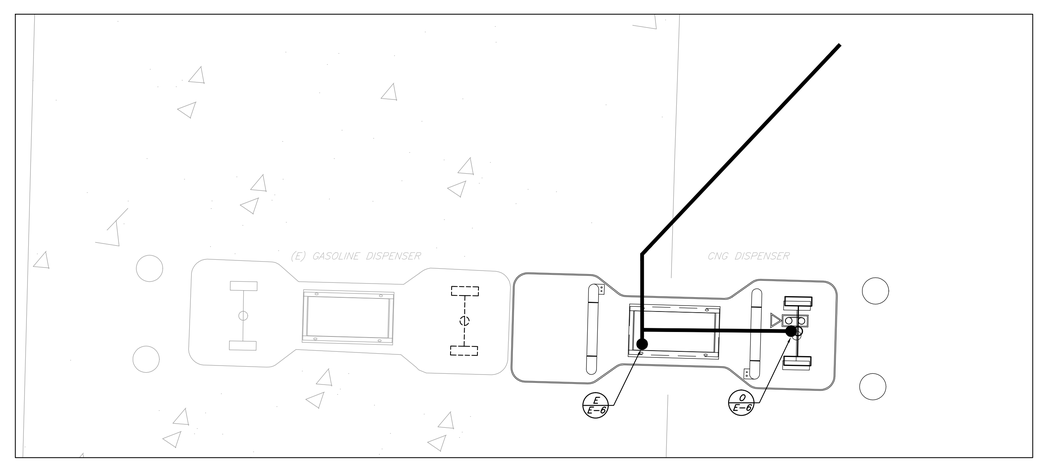

2 E 06 DISPENSER AREA
SCALE: 3/8" = 1'-0"

Graphic Scale
0 2' 4' 8'
Scale: 3/8" = 1'-0"

COLORADO LICENSED
JEFFREY M. GRIFFITH
26072
PROFESSIONAL ENGINEER

SGM
118 West Sixth Street, Suite 200
Glenwood Springs, CO 81601
970.945.1004 www.sgm-inc.com

Gunnison County
CNG Fill Station / 508 Tomichi Ave,
Gunnison CO

#	Revision	Date	By
1	Trillium Final Review #1	04/12/2017	

Grounding Layout

Job No.	2016-235.001
Drawn by:	TC
Date:	02/16/2017
QC: JG	PE: JG
File:	GunnisonCNG-Elec

E-05
Of 34

G:\2016\2016-235 gunnisonco\001-congstation\H-Dwgs\Map\Working\GunnisonCNG-Elec.dwg Plotted: 4/13/2017 8:45 AM By: Ty Costello

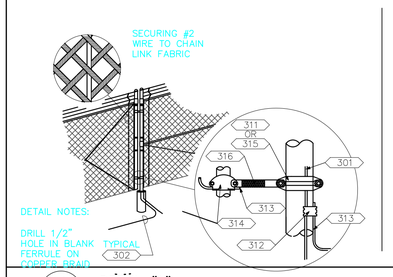

A / E06 DETAIL "A"
NTS

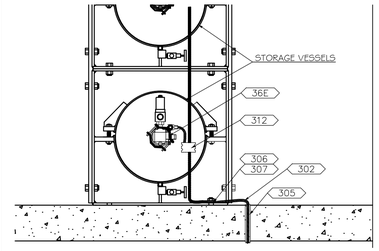

B / E06 STORAGE TANK
SCALE: N.T.S.

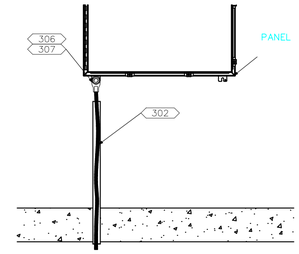

C / E06 DETAIL C
SCALE: N.T.S.

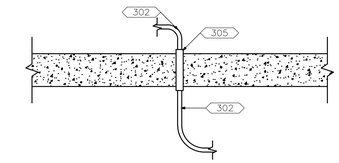

D / E06 DETAIL "D"
NTS TYPICAL AT STUB UP LOCATIONS

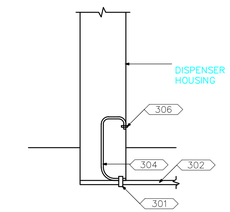

E / E06 DETAIL E
SCALE: N.T.S.

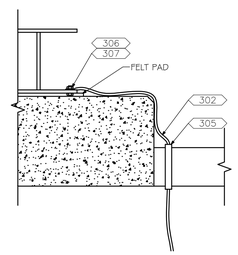

F / E06 DETAIL F
SCALE: N.T.S.

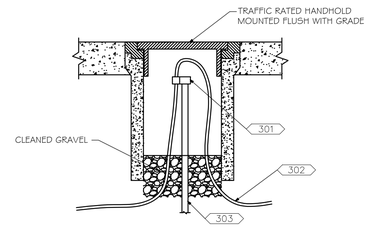

G / E06 DETAIL G
SCALE: N.T.S.

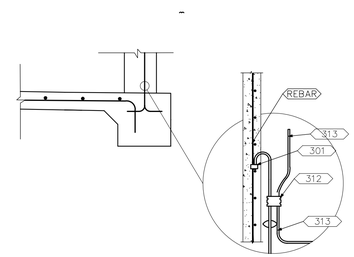

H / E06 DETAIL H
SCALE: N.T.S.

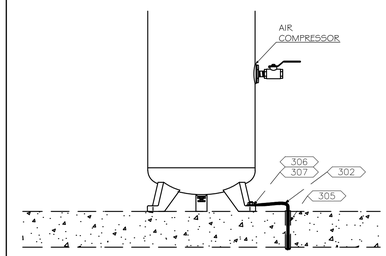

I / E06 AIR COMPRESSOR
SCALE: N.T.S.

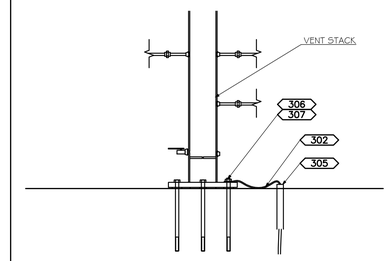

J / E06 DETAIL "J"
NTS

GROUND GRID EQUIPMENT LIST

EQUIP. NO.	QTY.	DESCRIPTION	MANUFACTURER	CATALOG NO.
301	AS REQ'D	Cadweld Connection	tbd	tbd
302	AS REQ'D	# 3/0 AWG, Stranded, Soft Drawn, Copper Conductor	tbd	tbd
303	AS REQ'D	Ground Rod 3/4" x 10' Copper Clad Steel	tbd	tbd
304	AS REQ'D	# 3/0 AWG, Stranded, Insulated THHN Copper Conductor	tbd	tbd
305	AS REQ'D	1" SCHD 40 PVC Conduit Sealed	tbd	tbd
306	AS REQ'D	Compression Ground Lug #3/0 Copper to Bolted Connection	Burndy	YGA26-2N
307	AS REQ'D	Ground Clamp, 2/0 Cable to Flat Servit Post	Burndy	KC
310	AS REQ'D	Bronze Ground Clamp - 1 Cable to 1 3/4" tube #4 solid to 3/0 stranded Copper	Anderson	GC-111-5B
311	AS REQ'D	Bronze Ground Clamp - 1, 2, or 3 Cables to 2 1/2" Tube, 3/0 solid to 250 MCM Copper	Anderson	GC-110-82C
312	AS REQ'D	Bronze Parallel Connector - Split Bolt Type C, for #2 solid copper	Anderson	C-2
313	AS REQ'D	# 3/0 AWG, Solid, Soft Drawn Copper Conductor Tinned	tbd	tbd
314	AS REQ'D	Bronze Ground Clamp - 1 Cable to 1 3/4" tube #4 solid to 3/0 stranded Copper	Anderson	GC-111-5B
315	AS REQ'D	Bronze Ground Clamp - 1, 2, or 3 Cables to 4" Tube, 3/0 solid to 250 MCM Copper	Anderson	GC-110-142C
316	AS REQ'D	Flexible Copper Grounding Braid	Anderson	GC-100-3A
317	AS REQ'D			

Notes: 1) tbd = To be determined by contractor

GENERAL SHEET NOTES

1. CONTRACTOR MAY USE BURNDY COMPRESSION CONNECTIONS IN PLACE OF CAD WELDS. CONTRACTOR TO DETERMINE TYPE OF CONNECTOR.
2. MATCH WELD METAL AND MOLD TO CONDUCTOR AND METAL TO WHICH IT IS BEING BONDED.
3. MAKE TYPE PT CAD WELDS BEFORE ATTACHING #2/0 CONDUCTOR TO POST.
4. CATALOG NUMBERS ON SCHEDULE ARE GIVEN TO ESTABLISH A TYPE OF MATERIAL AND A LEVEL OF QUALITY.
5. ALL UNDERGROUND CONNECTIONS WILL BE CADWELD CONNECTIONS
6. PROVIDE 1#2/0 STRANDED COPPER WIRE CONNECTION JUMPER TO EACH LOCATION WHERE REBAR OR WIRE MESH IS INSTALLED FOR POURED CONCRETE PADS. COORDINATE EXACT LOCATIONS IN FIELD. MAKE CONNECTIONS WITH CRIMPED APPROVED C CLAMPS OR CADWELD CONNECTION.
7. PROVIDE CONNECTION OF GROUND LOOPS TO ELECTRICAL SERVICE EQUIPMENT GROUND BUS.

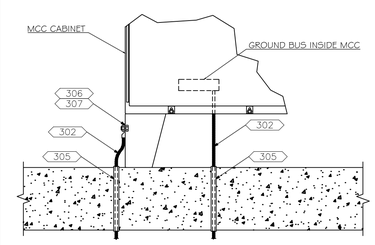

K / E06 DETAIL K
SCALE: N.T.S.

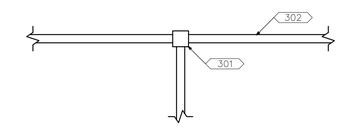

L / E06 DETAIL L
SCALE: N.T.S.

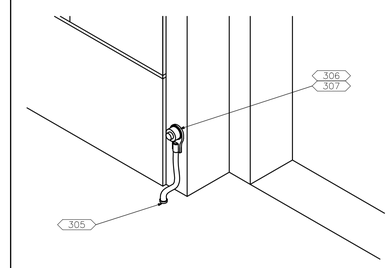

N / E06 DETAIL N
SCALE: N.T.S.

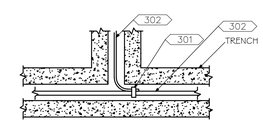

M / E06 DETAIL "M"
NTS
NOT USED

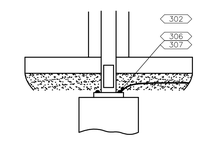

O / E06 DETAIL O
SCALE: N.T.S.

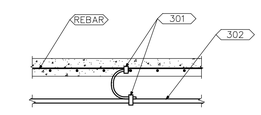

P / E06 DETAIL P
SCALE: N.T.S.

i:\2016\2016-235-gunnisonco\001-negotiation\st-Dwgs\Mep\Working\GunnisonCNG-Elec.dwg Plotted: 4/13/2017 8:45 AM By: Ty Costello

COLORADO LICENSED PROFESSIONAL ENGINEER 26072

SGM
118 West Sixth Street, Suite 200
Glenwood Springs, CO 81601
970.945.1004 www.sgm-inc.com

Gunnison County
CNG Fill Station / 508 Tomichi Ave,
Gunnison CO

#	Revision	Date	By
1	Trillium Final Review #1	04/12/2017	

Grounding Details

Job No.	2016-235.001
Drawn by:	TC
Date:	02/16/2017
QC: JG	PE: JG
File:	GunnisonCNG-Elec

E-06

PANEL SWITCH BOARD

VOLTS/PHASE/WIRE:	**MAIN SIZE & TYPE:**	**LOCATION:**	**NOTES:**	NOT AN ACTUAL PANEL. FOR LOAD TRACKING ONLY.
480 V, 3 PH 4 WIRE	800 AMP GFI	MCC		
ACCESSORIES:	IDENTIFICATION, GROUNDING BAR, INSULATED GROUND BAR			

CKT	OCP		LOAD (kVA)			PANEL / EQUIPMENT	LCL	PHASE LOAD			LCL	PANEL / EQUIPMENT	LOAD (kVA)			OCP		CKT
NO	AMP	POLE	LTG	CO	PWR		kVA	A	B	C	kVA		LTG	CO	PWR	AMP	POLE	NO
1	400	3			66.5	SKID #A COMPRESSOR	66.5	75.1			9.1	120/208 Transformer	2.1	1.6	5.0	50	3	-
-	-	-			66.5		66.5		72.6		6.2	-	0.5	2.8	2.8	-	-	-
-	-	-			66.5		66.5			71.4	5.1	-	0.8	0.4	3.7	-	-	-
5	60	3			12.2	GAS DRYER	12.2	45.9			11.8	Breaker HS1	0.0	0.0	11.8	60	3	4
-	-	-			12.2		12.2		78.3		11.8		0.0	0.0	11.8	-	-	-
-	-	-			12.2		12.2			78.3	11.8		0.0	0.0	11.8	-	-	-
											33.8	HyC MCC	0.5	0.4	32.8	200	3	6
									43.0		30.8		0.0	0.0	30.8	-	-	-
										43.0	30.8		0.0	0.0	30.8	-	-	-
								0.0			0.0							8
									0.0		0.0							-
										0.0	0.0							-
TOTALS:						CONNECTED kVA PER PHASE		199	194	193		CONNECTED TOTAL kVA				586		
						CONNECTED AMPS PER PHASE		719	700	696		CONNECTED AVERAGE AMPS PER PHASE				705		

NEC DIVERSIFIED LOAD CALCULATIONS							
LIGHTING 3.89kVA @125% =	5	kVA	ALL OTHER LOADS @100% =	577	kVA	DIVERSIFIED TOTAL kVA =	608
RECEPTACLES 5.08kVA @100% =	5	kVA	25% OF LARGEST MOTOR =	21	kVA	AVERAGE AMPS PER PHASE =	731
REMAINDER 0kVA @ 50% =	0	kVA					

PANEL "HS1"

VOLTS/PHASE/WIRE:	**PANEL SIZE & TYPE:**	**MAIN SIZE & TYPE:**	**LOCATION:**	**CABINET:**	**NOTES:**
480 V, 3 PH, 3 WIRE	100 AMPERE BREAKER	100 AMPERE TERMINAL	MCC	NEMA 3R	
ACCESSORIES:	PANEL DIRECTORY, IDENTIFICATION, GROUNDING BAR, INSULATED GROUND BAR, SUBFEED LUGS				

CKT	OCP		LOAD (kVA)			DESCRIPTION	LCL	PHASE LOAD			LCL	DESCRIPTION	LOAD (kVA)			OCP		CKT
NO	AMP	POLE	LTG	CO	PWR		kVA	A	B	C	kVA		LTG	CO	PWR	AMP	POLE	NO
1	30	3			3.9	SKID #A COOLER	3.9	4.8			1.0							
3	-	-			3.9	-	3.9		4.8		1.0							
5	-	-			3.9	-	3.9			4.8	1.0							
7	-	3			0.9	SKID #A HEATER	0.9	4.8			1.0							
9	-	-			0.9	-	0.9		4.8									
11	-	-			0.9	-	0.9			4.8								
13	15	3			1.0	SKID #A PRELUBE												
15	-	-			1.0	-												
17	-	-			1.0	-												
19	15	3.0			2.1	AIR COMPRESSOR												
21	-	-			2.1	-												
23	-	-			2.1	-												
TOTALS:						CONNECTED kVA PER PHASE		14	14	14		CONNECTED TOTAL kVA				41		
						CONNECTED AMPS PER PHASE		49	49	49		CONNECTED AVERAGE AMPS PER PHASE				49		

NEC DIVERSIFIED LOAD CALCULATIONS			N = SWITCHED NEUTRAL C/B				
LIGHTING 0kVA @125% =	0	kVA	ALL OTHER LOADS @100% =	41	kVA	DIVERSIFIED TOTAL kVA =	44
RECEPTACLES 0kVA @100% =	0	kVA	25% OF LARGEST MOTOR =	3	kVA	AVERAGE AMPS PER PHASE =	52
REMAINDER 0kVA @ 50% =	0	kVA					

HYC MCC

VOLTS/PHASE/WIRE:	**PANEL SIZE & TYPE:**	**MAIN SIZE & TYPE:**	**LOCATION:**	**CABINET:**	**NOTES:**
480 V, 3 PH, 3 WIRE	150 AMP MCC	150 AMP BREAKER	HYC	NEMA 3R	
ACCESSORIES:					

CKT	OCP		LOAD (kVA)			DESCRIPTION	LCL	PHASE LOAD			LCL	DESCRIPTION	LOAD (kVA)			OCP		CKT
NO	AMP	POLE	LTG	CO	PWR		kVA	A	B	C	kVA		LTG	CO	PWR	AMP	POLE	NO
1	125	3			26.6	HyC COMPRESSOR	26.6	28.7			2.1	HYC COOLER			2.1	15	3	2
-	-	-			26.6	-	26.6		28.7		2.1	-			2.1	-	-	-
-	-	-			26.6	-	26.6			28.7	2.1	-			2.1	-	-	-
3	15	3			2.1	HYC PRE-LUBE	2.1	5.0			3.0	120VAC TRANSFORMER	0.5	0.4	2.0	10	2	4
-	-	-			2.1	-	2.1		2.1		0.0	-				-	-	-
-	-	-			2.1	-	2.1			2.1	0.0	-				-	-	-
TOTALS:						CONNECTED kVA PER PHASE		34	31	31		CONNECTED TOTAL kVA				95		
						CONNECTED AMPS PER PHASE		122	111	111		CONNECTED AVERAGE AMPS PER PHASE				115		

NEC DIVERSIFIED LOAD CALCULATIONS			N = SWITCHED NEUTRAL C/B				
LIGHTING 1kVA @125% =	1	kVA	ALL OTHER LOADS @100% =	94	kVA	DIVERSIFIED TOTAL kVA =	101
RECEPTACLES 0kVA @100% =	0	kVA	25% OF LARGEST MOTOR =	6	kVA	AVERAGE AMPS PER PHASE =	122
REMAINDER 0kVA @ 50% =	0	kVA					

PANEL "L1"

VOLTS/PHASE/WIRE:	**PANEL SIZE & TYPE:**	**MAIN SIZE & TYPE:**	**LOCATION:**	**CABINET:**	**NOTES:**
120/208 V, 3 PH, 4 WIRE	100 AMP PANEL	50 AMP BREAKER	MCC	NEMA 3R	
ACCESSORIES:	PANEL DIRECTORY, IDENTIFICATION, GROUNDING BAR, INSULATED GROUND BAR, SUBFEED LUGS				

CKT	OCP		LOAD (kVA)			DESCRIPTION	LCL	PHASE LOAD			LCL	DESCRIPTION	LOAD (kVA)			OCP		CKT
NO	AMP	POLE	LTG	CO	PWR		kVA	A	B	C	kVA		LTG	CO	PWR	AMP	POLE	NO
1	15	1	1.1			COMPOUND LIGHTS *	1.4	2.3			1.2	MASTER CONTROL (MCP)		1.2		20	1	2
3	15	1		1.2		NETWORKING PANEL (NCP)	1.2		2.4		1.2	PDC PLC		1.2		20	1	4
5	15	1	0.8				1.0			2.6	1.8	AIR DRYER			1.8	20	1	6
7	15	1	0.5				0.6	1.5			1.0				1.0	20	1	8
									0.5		0.0	SPARE				15		10
11	15	1			0.5	SPARE	0.5			0.5	0.0	PHOTOCELL			0.0	-	-	12
13	15	2			1.3	HVAC	1.3	1.3			0.0	SPACE						14
15	15	2			1.3	HVAC	1.3		1.3		0.0	SPACE						16
17						SPACE	0.0			0.0	0.0	SPACE						18
19						SPACE	0.0	0.0			0.0	SPACE						20
21						SPACE	0.0		0.0		0.0	SPACE						22
23						SPACE	0.0			0.0	0.0	SPACE						24
TOTALS:						CONNECTED kVA PER PHASE		5	4	3		CONNECTED TOTAL kVA				12		
						CONNECTED AMPS PER PHASE		42	35	25		CONNECTED AVERAGE AMPS PER PHASE				34		

NEC DIVERSIFIED LOAD CALCULATIONS			S = SHUNT TRIP WITH SWITCHED NEUTRAL				
LIGHTING 2kVA @125% =	3	kVA	ALL OTHER LOADS @100% =	6	kVA	DIVERSIFIED TOTAL kVA =	13
RECEPTACLES 4kVA @100% =	4	kVA	25% OF LARGEST MOTOR =	0	kVA	AVERAGE AMPS PER PHASE =	36
REMAINDER 0kVA @ 50% =	0	kVA					

PANEL "LS2"

VOLTS/PHASE/WIRE:	**PANEL SIZE & TYPE:**	**MAIN SIZE & TYPE:**	**LOCATION:**	**CABINET:**	**NOTES:**
120/208 V, 3 PH, 4 WIRE	100 AMP DIST BLOCK	50 AMP BREAKER	MCC	NEMA 3R	ON SHUNT TRIP
ACCESSORIES:	PANEL DIRECTORY, IDENTIFICATION, GROUNDING BAR, INSULATED GROUND BAR, SUBFEED LUGS				

CKT	OCP		LOAD (kVA)			DESCRIPTION	LCL	PHASE LOAD			LCL	DESCRIPTION	LOAD (kVA)			OCP		CKT
NO	AMP	POLE	LTG	CO	PWR		kVA	A	B	C	kVA		LTG	CO	PWR	AMP	POLE	NO
1	20	1		0.4		COMP. #A CONTROL	0.4	0.8			0.5	SPARE						
3	20	1	0.5			COMP. #A LIGHTING	0.6		1.0		0.5	SPARE						
5	20					COMP. #C CONTROL (F)	0.0			0.8	0.5	SPARE						
7	20					COMP. #C LIGHTING (F)	0.0				0.5	SPARE						
9	20	1			1.2	DRYER HEAT TRACE (GFEP)	1.2		0.4		0.4	SPARE						10
11	20	1		0.4		VALVE PANEL PLC				1.0	1.0	SPARE						12
13								1.7			0.5	SPARE						14
15						SPACE	0.0		0.5		0.5	SPARE						16
17						SPACE	0.0			0.0	0.0	SPACE						18
19						SPACE	0.0	0.0			0.0	SPACE						20
21						SPACE	0.0		0.0		0.0	SPACE						22
23						SPACE	0.0			0.0	0.0	SPACE						24
TOTALS:						CONNECTED kVA PER PHASE		4	2	2		CONNECTED TOTAL kVA				7		
						CONNECTED AMPS PER PHASE		29	16	15		CONNECTED AVERAGE AMPS PER PHASE				20		

NEC DIVERSIFIED LOAD CALCULATIONS			N = SWITCHED NEUTRAL C/B				
LIGHTING 1kVA @125% =	1	kVA	ALL OTHER LOADS @100% =	5	kVA	DIVERSIFIED TOTAL kVA =	7
RECEPTACLES 1kVA @100% =	1	kVA	25% OF LARGEST MOTOR =	0	kVA	AVERAGE AMPS PER PHASE =	21
REMAINDER 0kVA @ 50% =	0	kVA					

NOTE: HEAT TRACE SHALL BE CONNECTED TO GROUND FAULT EQUIPMENT PROTECTION (GFEP) BREAKER

i:\2016\2016-235-gunnisonco\001-cngstation\H-Dwgs\Mep\Working\GunnisonCNG-Elec.dwg Plotted: 4/13/2017 8:45 AM By: Ty Costello

COLORADO LICENSED PROFESSIONAL ENGINEER JEFF M. GREBE 26072

SGM
118 West Sixth Street, Suite 200
Glenwood Springs, CO 81601
970.945.1004 www.sgm-inc.com

Gunnison County
CNG Fill Station / 508 Tomichi Ave,
Gunnison CO

#	Revision	Date	By
1	Trillium Final Review #1	04/12/2017	

Panel Schedules

Job No.	2016-235.001
Drawn by:	TC
Date:	02/16/2017
QC: JG	PE: JG
File:	GunnisonCNG-Elec

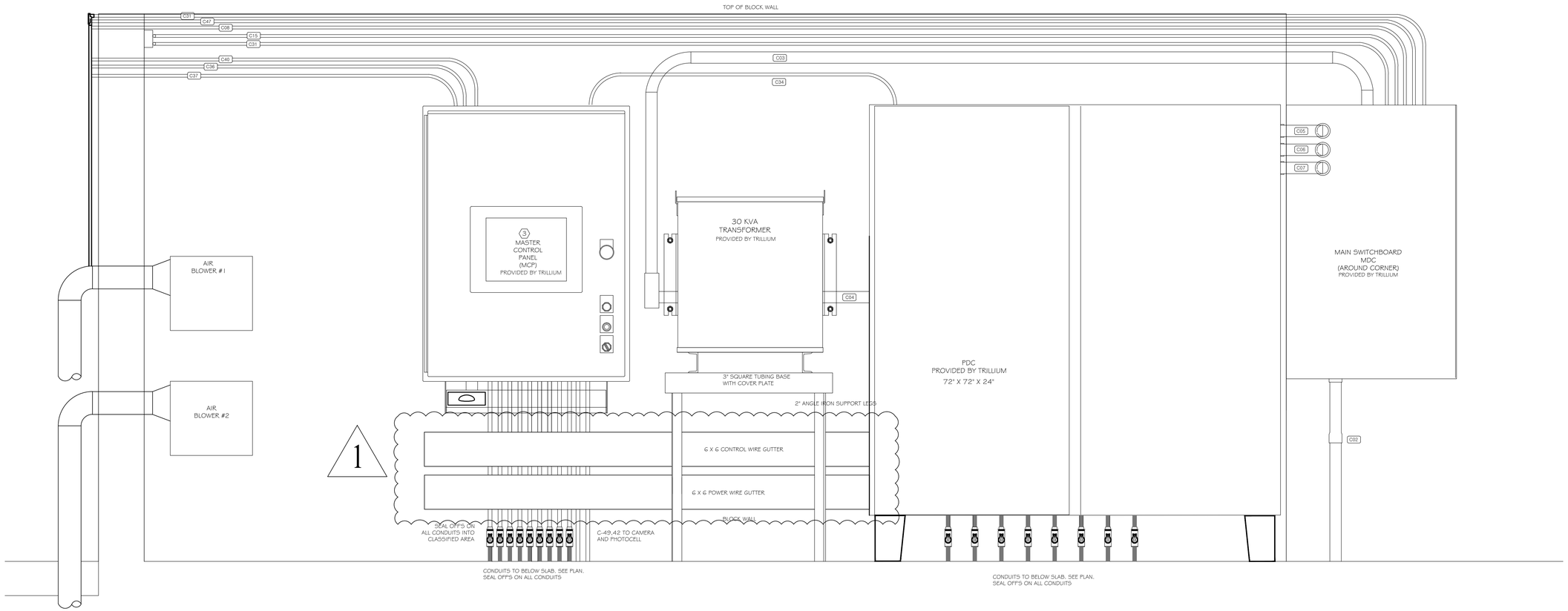

GENERAL NOTES

1. *TRILLIUM WILL SUPPLY THE FOLLOWING EQUIPMENT ON THE WALL. CONTRACTOR TO INSTALL ALL WIRES AND RUNS FROM OUTSIDE OF PREFABRICATED BUILDING.*
2. *CONTRACTOR TO INSTALL CAMERA POWER BOX, AND NETWORKING COMMUNICATION BOX. TRILLIUM WILL TERMINATE IN PANELS.*
3. *ALL WIRE PULLED INTO MASTER PANEL PULL BOX WILL BE LABELED ON BOTH ENDS WITH CLEAR TO READ NUMBERS. CONTRACTOR TO SUPPLY REVISED CONDUIT SCHEDULE LISTING WIRE NUMBERS LOCATED IN WHICH CONDUITS.*
4. *CONTRACTOR TO SUPPLY TEN FOOT MINIMUM EXTRA WIRE IN MASTER PANEL PULL BOX TO ALLOW FOR WIRE TO BE PULLED INTO RESPECTIVE PANELS. WIRE TO BE COILED NEATLY AND TIED PER CONDUIT.*
5. *ALLOW FIFTY FEET OF EXTRA WIRE FOR PHONE CONNECTION.*
6. *ALL CONDUITS SHALL HAVE SEAL OFFS WHERE ENTERING OR LEAVING CLASSIFIED LOCATIONS PER NEC. 501.*
7. *ALL UNDERGROUND CONDUITS SHALL HAVE SEAL OFFS AS THE FIRST JOINT ABOVE GROUND IN HAZARDOUS AREAS.*
8. *ALL CONDUITS ON EXPLOSION PROOF FIXTURES AND ENCLOSURES SHALL HAVE SEAL OFFS ON FIRST CONDUIT INTO OR OUT OF THE FIXTURE OF ENCLOSURE.*
9. *SEE SHEET E-6 FOR CONDUIT AND CONDUCTOR SCHEDULE.*

COLORADO LICENSED
JOHN M. GREENWOOD
28072
PROFESSIONAL ENGINEER

SGM
118 West Sixth Street, Suite 200
Glenwood Springs, CO 81601
970.945.1004 www.sgm-inc.com

Gunnison County
CNG Fill Station / 508 Tomichi Ave,
Gunnison CO

#	Revision	Date	By
1	Trillium Final Review #1	04/12/2017	

Control & Communication Elevations

Job No.	2016-235.001
Drawn by:	TC
Date:	02/16/2017
QC: JG	PE: JG
File:	GunnisonCNG-Elec

E-08

Of 34

G:\2016\2016-235-gunnisoncng\001-engineering\Dwgs\Mep\Working\GunnisonCNG-Elec.dwg Plotted: 4/13/2017 8:45 AM By: Ty Castello

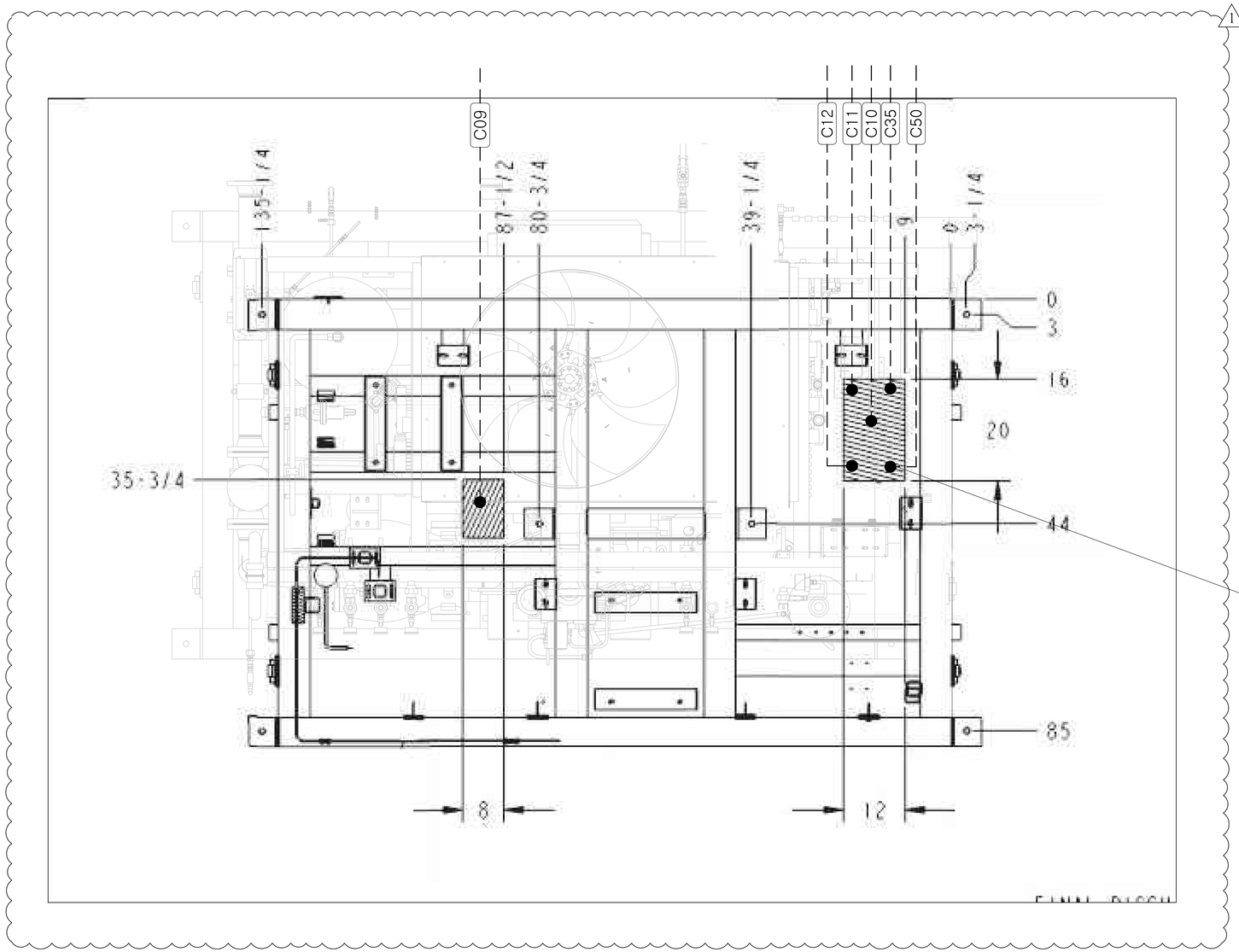

1 E 10 GAS COMPRESSOR A CONDUIT DETAIL
SCALE: N.T.S.

COMPRESSOR PACKAGE	QUANTITY OF ONE (1)
PACKAGER:	ANGI
MANUFACTURER:	ARIEL CORPORATION
MODEL:	JGQ/2, NG300E, 4 STAGE
CAPACITY:	235 SCFM @ 10PSI
1ST STAGE	10.750", P-HE, 225 MAWP
2ND STAGE	5.500", P-CE, 525 MAWP
3RD STAGE	3.625", SG-CE, 2550 MAWP
4TH STAGE	1.750", SG-FS-HE, 6100 MAWP
WEIGHT:	14,500 LBS
MOTOR	
MANUFACTURER:	TECO / WESTINGHOUSE (OR EQUAL)
MODEL:	WEG
VOLTAGE:	460 VAC, 3 PHASE, 60 Hz
SERVICE DUTY:	S.F. 1.15
RATING:	200 HP @ 1,785 RPM
ENCLOSURE:	TOTALLY ENCLOSED FAN COOLED (TEFC)
COOLER	
MANUFACTURER:	BALDOR
MODEL:	BALDOR
DRIVE:	10 HP TEFC AC ELECTRIC MOTOR
SKID CONTROLS	
MANUFACTURER:	ANGI
CONTROLLER:	ALLEN BRADLEY, COMPACT LOGIX, POINT I/O

Hy-C COMPRESSOR PACKAGE	QUANTITY OF ONE (1)
PACKAGER:	TRILLIUM CNG
MANUFACTURER:	PINNACLE CNG
MODEL:	TACTICAL 5" Hy-C
1ST STAGE:	5" CYLINDER WITH 16" STROKE
2ND STAGE:	5" CYLINDER WITH 16" STROKE
WEIGHT:	15,000 LBS
MOTOR	
MODEL:	75 HP
VOLTAGE:	150 A @ 480 V, 3 PHASE
SERVICE DUTY:	CONTINUOUS RATING, S.F. 1.15, 1800 RPM
RATING:	NEMA PREMIUM EFFICIENCY
ENCLOSURE:	TOTALLY ENCLOSED FAN COOLED (TEFC)
COOLER	
MANUFACTURER:	AIR COOL EXCHANGERS
MODEL:	C30IM-4
DRIVE:	5 HP TEFC ELECTRIC MOTOR
SKID CONTROLS	
MANUFACTURER:	MURPHY
CONTROLLER:	ALLEN BRADLEY, COMPACT LOGIX, POINT I/O

AIR COMPRESSOR	QUANTITY OF ONE (1)
PACKAGER:	BRABAZON
TYPE:	RECIPRICATING AIR COMPRESSOR
MODEL:	5 HP, B53V84-ELITE
VOLTAGE:	460 V, 3 PHASE, 60HZ
AIR TANK:	80 GALLON, VERTICAL STEEL TANK
CONTROLS:	UL ELECTRICAL CONTROLS

AIR DRYER	QUANTITY OF ONE (1)
PACKAGER:	BRABAZON - PURE-AIR
AIR DRYER:	OUTDOOR RATED, W/ HEAT TRACE
MODEL:	MH-25N
VOLTAGE:	115 - 230V, 1 PHASE, 60HZ

MASTER CONTROL PANEL	QUANTITY OF ONE (1)
MANUFACTURER:	NUCO
CONTROLLER:	ALLEN BRADLEY, COMPACT LOGIX, PLC

POWER DISTRIBUTION CENTER	QUANTITY OF ONE (1)
PACKAGER:	EDEC
MAIN BREAKER:	EATON, 700 AMP, SERVICE ENTRANCE RATED
MODEL:	CUSTOM 700 AMP
POWER:	700 AMP, 480V, 3-PHASE, 4 WATTS, NEMA 3R
MAIN MOTOR STARTER:	EATON, 200 HP, S-811 SOFT STARTER

CNG PUBLIC VALVE PANEL	QUANTITY OF ONE (1)
PACKAGER:	JW-POWER COMPANY
MODEL:	TWO BANK PUBLIC VALVE PANEL
SIZE:	3/4" VALVES AND TUBING

TWIN HOSE PUBLIC DISPENSER	QUANTITY OF ONE (1)
PACKAGER:	KRAUS GLOBAL/GILBARCO
MODEL:	HAM 2(S/D)CGG-P&3CX12B2B01
FLOW METER:	MICRO-MOTION CNG 50
NOZZLE PUBLIC 1:	STAUBLI NGV TYPE II W/ OASIS 3-WAY VALVE
NOZZLE PUBLIC 2:	STAUBLI NGV TYPE II W/ OASIS 3-WAY VALVE
MAWP:	4,500 PSI
FILTRATION:	(2) PARKER J6 HOUSING, (1) GRADE 10, (1) GRADE 4

NATURAL GAS DRYER	QUANTITY OF ONE (1)
PACKAGER:	PSB INDUSTRIES
MODEL:	NG-SR-10-3-DDP, SINGLE TOWER DRYER
INLET CAPACITY:	240 SCFM @ 10 PSI
CONNECTION SIZE:	3" 150 LBS FLANGE INLET/OUTLET
DRYER NEMA CYCLE:	8 HOURS W/ AUTODEW
POWER:	460 V / 3 PHASE / 60 Hz, 21.2 FLA
CONTROLLER:	ALLEN BRADLEY, COMPACT LOGIX, POINT I/O
BYPASS:	BUTTERFLY VALVE
WEIGHT:	4,500 LBS W/ DESICCANT INSTALLED

CNG STORAGE CYLINDERS	QUANTITY OF THREE (3)
PACKAGER:	CP INDUSTRIES
MODEL:	24" OD x 1.564" MW x 16'-3" LONG CYLINDER
MAWP:	5,500 PSI
WATER VOLUME:	33.5 CU. FT. EACH
CNG VOLUME:	11,334 SCF EACH @4,500 PSI
TOTAL CNG VOLUME:	34,002 SCF @4,500 PSI
WEIGHT:	7,400 LBS. PER VESSEL

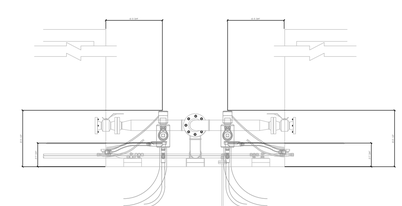

2 E 10 COMPRESSOR PIPE DETAIL
SCALE: N.T.S.

COLORADO LICENSED
JEFF M. TUTTLE
26072
PROFESSIONAL ENGINEER

SGM
118 West Sixth Street, Suite 200
Glenwood Springs, CO 81601
970.945.1004 www.sgm-inc.com

Gunnison County
CNG Fill Station / 508 Tomichi Ave,
Gunnison CO

#	Revision	Date	By
1	Trillium Final Review #1	04/12/2017	

Compressor Conduit Details

Job No.	2016-235.001
Drawn by:	TC
Date:	02/16/2017
QC: JG	PE: JG
File:	GunnisonCNG-Elec

E-09
Of 34

I:\2016\2016-235-gunnisonco\001-negotiation\H-Dwgs\Wsp\Working\GunnisonCNG-Elec.dwg Plotted: 4/13/2017 8:45 AM By: Tg Castello

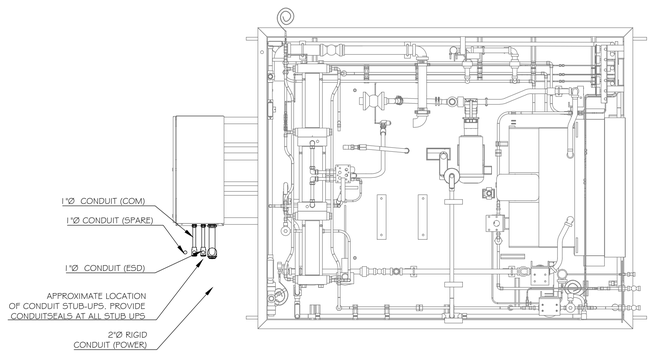

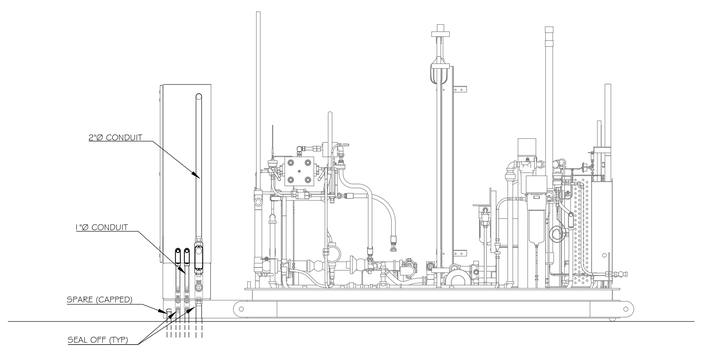

1 / E 11 HYC COMPRESSOR CONDUIT DETAIL

SCALE: N.T.S.

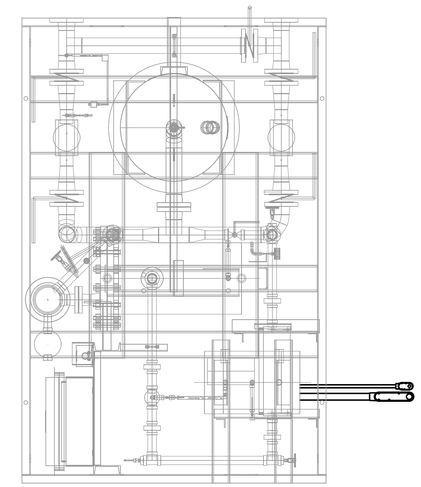

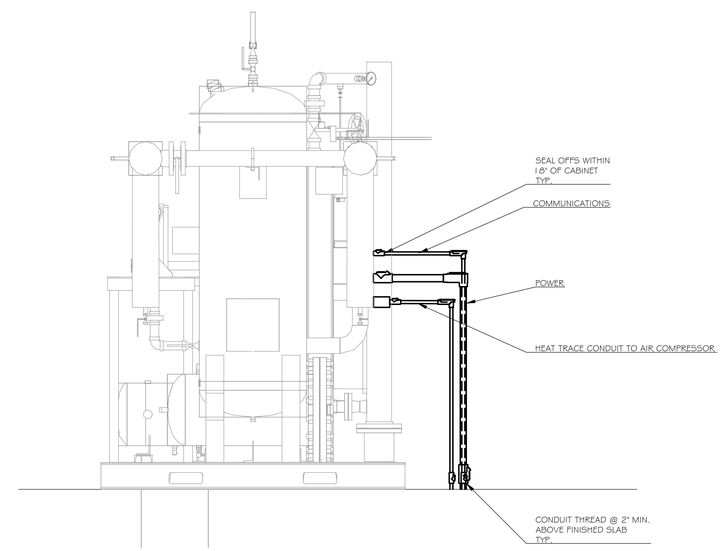

2 / E 11 GAS DRYER CONDUIT DETAIL

SCALE: N.T.S.

I:\2016\2016-235-gunnisonco\001-acquisition\H-Dwgs\Mep\Working\GunnisonCNG-Elec.dwg Plotted: 4/13/2017 8:45 AM By: Tj Costello

COLORADO LICENSED
TIMOTHY M. GAUDET
26072
PROFESSIONAL ENGINEER

SGM
118 West Sixth Street, Suite 200
Glenwood Springs, CO 81601
970.945.1004 www.sgm-inc.com

Gunnison County
CNG Fill Station / 508 Tomichi Ave,
Gunnison CO

#	Revision	Date	By
1	Trillium Final Review #1	04/12/2017	

HYC Compressor & Dryer Conduit Details

Job No.	2016-235.001
Drawn by:	TC
Date:	02/16/2017
QC: JG	PE: JG
File:	GunnisonCNG-Elec

E-10

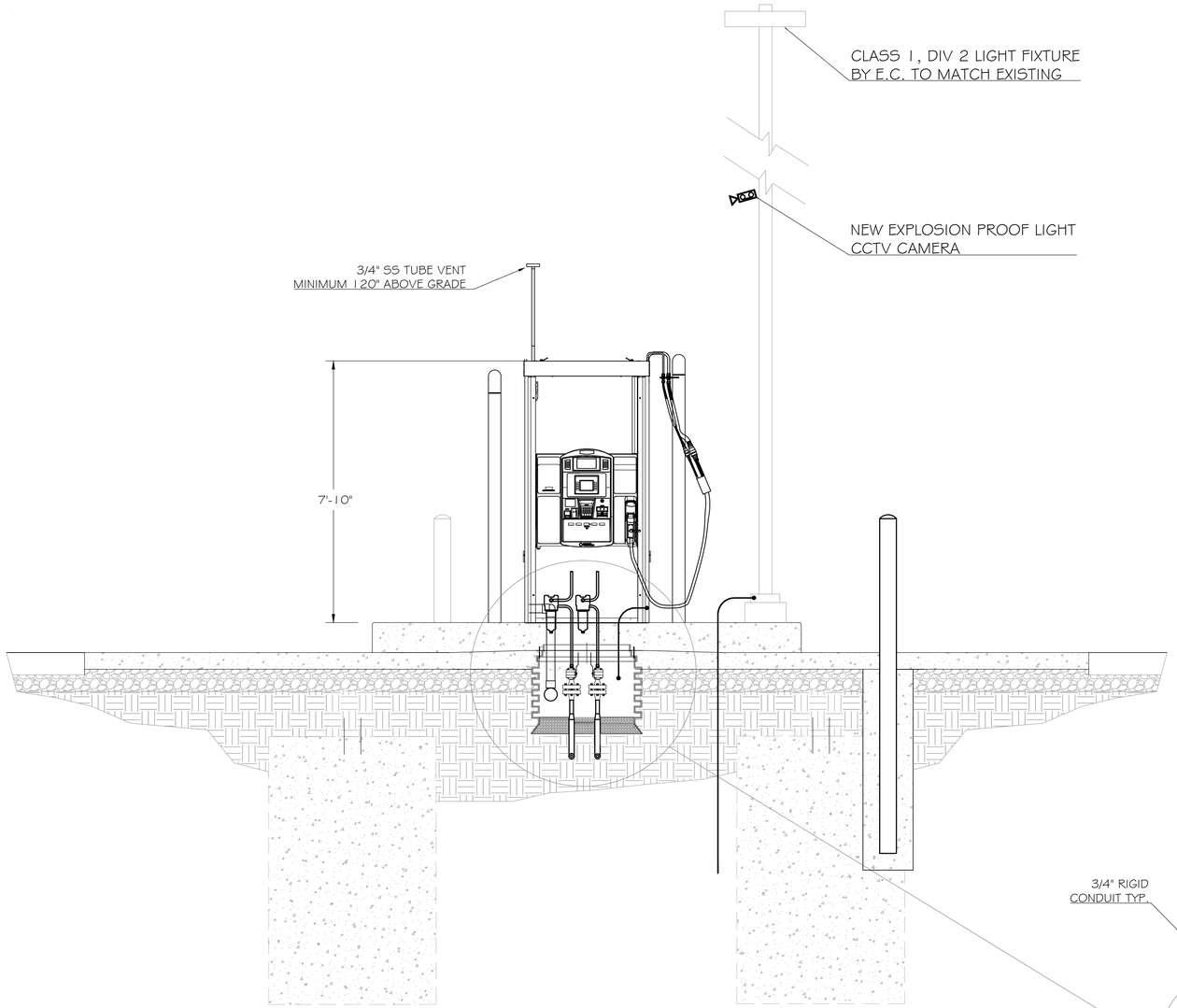

1/E12 DISPENSER PIT DETAIL
SCALE: N.T.S.

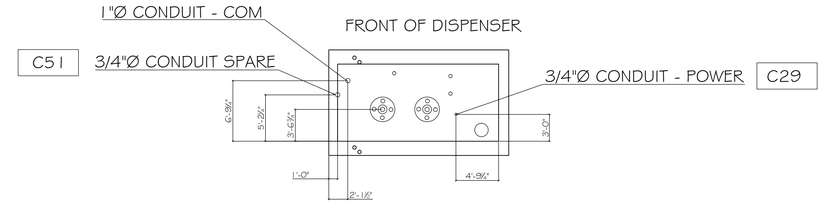

2/E12 DISPENSER HP RISER PIPE DETAIL
SCALE: N.T.S.

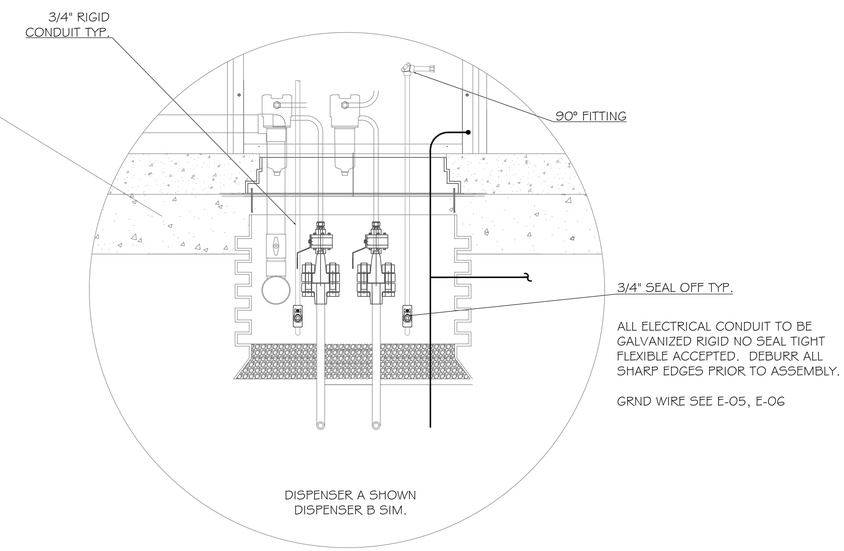

ALL ELECTRICAL CONDUIT TO BE GALVANIZED RIGID NO SEAL TIGHT FLEXIBLE ACCEPTED. DEBURR ALL SHARP EDGES PRIOR TO ASSEMBLY.

GRND WIRE SEE E-05, E-06

SGM
118 West Sixth Street, Suite 200
Glenwood Springs, CO 81601
970.945.1004 www.sgm-inc.com

Gunnison County
CNG Fill Station / 508 Tomichi Ave,
Gunnison CO

#	Revision	Date	By
1	Trillium Final Review #1	04/12/2017	

Dispenser Conduit Details

Job No.	2016-235.001
Drawn by:	TC
Date:	02/16/2017
QC: JG	PE: JG
File:	GunnisonCNG-Elec

E-11
Of 34

I:\2016\2016-235-gunnisonco\001-nogalstation\H-Dwgs\Wep\Working\GunnisonCNG-Elec.dwg Plotted: 4/13/2017 8:45 AM By: Ty Castello

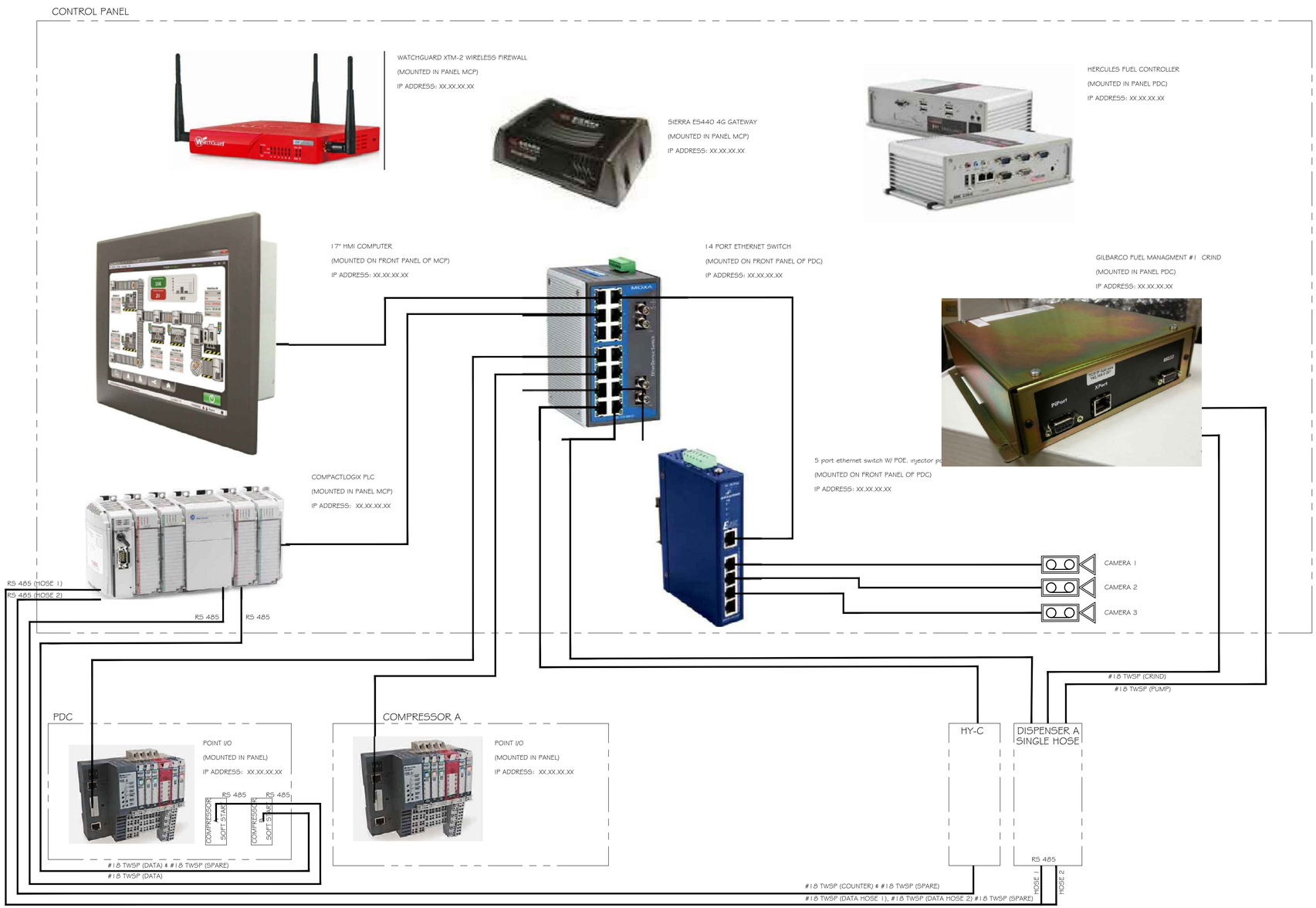

COLORADO LICENSED
JOHN M. GREENFIELD
26072
PROFESSIONAL ENGINEER

SGM
118 West Sixth Street, Suite 200
Glenwood Springs, CO 81601
970.945.1004 www.sgm-inc.com

Gunnison County
CNG Fill Station / 508 Tomichi Ave,
Gunnison CO

#	Revision	Date	By
1	Trillium Final Review #1	04/12/2017	

Network Riser Diagram

Job No.	2016-235.001
Drawn by:	TC
Date:	02/16/2017
QC: JG	PE: JG
File:	GunnisonCNG-Elec

E-12

Of 34

I:\2016\2016-235-gunnisonco\001-negotiation\Int-Dwgs\Mep\Working\GunnisonCNG-Elec.dwg Plotted: 4/13/2017 8:45 AM By: Ty Costello

GENERAL NOTES

1. ELECTRICAL DRAWINGS ARE DIAGRAMMATIC, SIZES AND LOCATION OF EQUIPMENT AND WIRING ARE SHOWN TO SCALE WHERE POSSIBLE, BUT MAY BE DISTORTED FOR CLARITY ON THE DRAWINGS. FINAL LOCATION OF OUTLETS AND EQUIPMENT SHALL BE AS APPROVED BY THE ENGINEER OR HIS REPRESENTATIVE. IT IS NOT WITHIN THE SCOPE OF DRAWINGS TO SHOW ALL NECESSARY BENDS, OFFSETS, PULL BOXES AND OBSTRUCTIONS. IT SHALL BE THE RESPONSIBILITY OF THE CONTRACTOR TO INSTALL HIS WORK TO CONFORM TO THE STRUCTURE, PRESERVE HEADROOM AND KEEP OPENINGS AND PASSAGEWAYS CLEAN.

2. BIDDERS, BEFORE SUBMITTING A PROPOSAL, SHALL VISIT AND CAREFULLY EXAMINE THE AREAS AFFECTED BY THIS WORK TO BECOME FAMILIAR WITH EXISTING CONDITIONS AND WITH THE DIFFICULTIES THAT WILL ATTEND THE EXECUTION OF THIS WORK. SUBMISSION OF A PROPOSAL WILL BE CONSTRUED AS EVIDENCE THAT SUCH AN EXAMINATION HAS BEEN MADE. LATER CLAIMS WILL NOT BE RECOGNIZED FOR EXTRA LABOR, EQUIPMENT OR MATERIALS REQUIRED BECAUSE OF DIFFICULTIES ENCOUNTERED WHICH COULD HAVE BEEN FORESEEN HAD SUCH EXAMINATION BEEN MADE.

3. BIDS SHALL INCLUDE ALL POWER, GROUNDING, AND EMPTY CONDUIT REQUIREMENTS NECESSARY FOR THE COMPLETE ELECTRICAL INSTALLATION.

4. FURNISH AND INSTALL WIRING FOR EQUIPMENT FURNISHED BY OTHERS, AS SHOWN ON MECHANICAL, HVAC, PLUMBING AND/OR ELECTRICAL DRAWINGS. COORDINATE WITH OTHER TRADES FOR DETAILS OF INSTALLATION AND WIRING REQUIREMENTS. THE TERM "WIRING" AS USED HEREIN SHALL INCLUDE FURNISHING AND INSTALLING CONDUIT, WIRES, JUNCTION/OUTLET BOXES, DISCONNECTS, OVER CURRENT PROTECTION AND FINAL CONNECTIONS. COORDINATE FINAL CONDUCTOR SIZES, QUANTITIES, VOLTAGE REQUIREMENTS, AND OVER CURRENT DEVICE AND OUTLET RATINGS WITH ACTUAL EQUIPMENT TO BE FURNISHED TO THE SITE PRIOR TO FINALIZING WIRING INSTALLATION. MINOR ADJUSTMENTS TO WIRING REQUIREMENTS NECESSARY TO ACCOMMODATE ACTUAL FURNISHED EQUIPMENT SHALL BE PROVIDED AT NO ADDITIONAL COST TO OWNER.

5. THE ELECTRICAL CONTRACTOR SHALL COMPLY WITH THE FOLLOWING CODES AND STANDARDS:
   A. UNDERWRITERS LABORATORIES, INC. (UL).
   B. NATIONAL ELECTRICAL CODE (NEC) NFPA 70.
   C. INTERNATIONAL BUILDING CODE WITH LOCAL AMENDMENTS.
   D. INTERNATIONAL FIRE CODE WITH LOCAL AMENDMENTS.
   E. OCCUPATIONAL SAFETY AND HEALTH ACT (OSHA).
   F. NATIONAL FIRE PROTECTION ASSOCIATION (NFPA).
   G. AMERICAN DISABILITIES ACT (ADA).
   H. BUILDING RULES AND REGULATIONS.
   I. ALL LOCAL JURISDICTION DIRECTIVES AND REQUIREMENTS.

6. THIS CONTRACTOR SHALL DO ALL CUTTING AND PATCHING OF THE EXISTING CONSTRUCTION WHICH MAY BE REQUIRED FOR THE PROPER INSTALLATION OF THE ELECTRICAL WORK. ALL PATCHING SHALL BE OF THE SAME MATERIALS, WORKMANSHIP AND FINISH AS, AND SHALL ACCURATELY MATCH, ALL SURROUNDING CONSTRUCTION.

7. VERIFY LOCATIONS OF ALL ELECTRICAL EQUIPMENT. IN CENTERING OUTLETS AND LOCATING BOXES OR OUTLETS, ALLOW FOR OVERHEAD PIPES, DUCTS, MECHANICAL EQUIPMENT, VARIATIONS IN FIREPROOFING AND PLASTERING, WINDOW AND DOOR TRIM, PANELING, HUNG CEILING, ETC., AND CORRECT ANY INACCURACY RESULTING FROM FAILURE TO DO SO WITHOUT EXPENSE TO TRILLIUM.

8. LOCATE JUNCTION AND PULL BOXES TO BE CONCEALED IN FINISH SPACES. WHERE NECESSARY, REROUTE RACEWAYS OR MAKE OTHER ARRANGEMENTS FOR CONCEALMENT. PROVIDE PULL BOXES WHERE NECESSARY FOR WIRE PULLING. COORDINATE ALL BOX LOCATIONS WITH OTHER TRADES. COVERS OF JUNCTION AND PULL BOXES SHALL BE ACCESSIBLE.

9. SECURE ALL SUPPORTS TO BUILDING STRUCTURE AS REQUIRED. SUPPORT HORIZONTAL CONDUIT RUNS AT NO MORE THAN 10' INTERVALS.

10. UPON COMPLETION OF ALL ELECTRICAL WORK, ELECTRICAL CONTRACTOR SHALL ADJUST AND TEST ALL CIRCUITS, OUTLETS, SWITCHES, LIGHTS, MOTORS AND ANY OTHER ELECTRICAL ITEMS INSTALLED. ANY DEFECTIVE ITEMS SHALL BE IMMEDIATELY REPAIRED OR REPLACED WITH NEW EQUIPMENT OR MATERIALS AND THAT PORTION OF THE SYSTEM SHALL BE RETESTED. ALL SUCH REMEDIAL WORK SHALL BE PROVIDED AT NO ADDITIONAL COST TO THE TRILLIUM. TESTING SHALL BE DONE IN ACCORDANCE WITH THE "ACCEPTANCE TESTING SPECIFICATIONS FOR ELECTRICAL POWER DISTRIBUTION EQUIPMENT AND SYSTEMS" OF THE INTERNATIONAL ELECTRICAL TESTING ASSOCIATION (NETA).

11. UPON COMPLETION OF ALL ELECTRICAL WORK, ELECTRICAL CONTRACTOR SHALL BALANCE ALL PANEL BOARDS AFFECTED TO WITHIN 10% DEVIATION BETWEEN PHASES.

12. AFTER COMPLETION OF WORK, CLEAN UP ALL RESULTANT DEBRIS AND REMOVE FROM THE SITE. DISPOSE OF PROPERLY.

13. ALL ABOVE GROUND CONDUIT SHALL BE THREADED RIGID STEEL (RGS), MINIMUM 3/4", UNLESS OTHERWISE NOTED. FLEXIBLE METAL CONDUIT ("GREENFIELD") MAY BE USED ONLY FOR FINAL CONNECTIONS TO LIGHTING FIXTURES OR VIBRATING EQUIPMENT UNLESS OTHERWISE INDICATED ON DRAWINGS.

14. CONDUCTORS #10 AWG AND SMALLER SHALL BE COPPER, STRANDED, TYPE THHN/THWN; #8 AWG AND LARGER SHALL BE COPPER, STRANDED, TYPE THHN/THWN. ALL WIRING FOR LIGHTING AND POWER SHALL BE #12 AWG MINIMUM.

15. BRANCH CIRCUIT HOME RUN CONDUCTORS SHALL BE INCREASED ONE SIZE (MINIMUM) TO COMPENSATE FOR VOLTAGE DROP FOR 120 VOLT CIRCUITS EXCEEDING 100' FEET AND FOR 277 VOLT CIRCUITS EXCEEDING 150' FEET.

16. ALL CHOPPING FOR ELECTRICAL INSTALLATION SHALL BE COORDINATED WITH CONSTRUCTION MANAGER AND OTHER TRADES.

17. ALL PENETRATIONS THROUGH FIRE RATED WALLS OR FLOORS SHALL BE SEALED TO PREVENT THE SPREAD OF SMOKE AND FIRE. THE FIRE RATING OF THE PENETRATION SEALING METHOD SHALL MATCH THE RATING OF THE WALL OR FLOOR. USE A UL MEA/BSA APPROVED SEALING METHOD WHICH IS ACCEPTABLE TO BUILDING MANAGEMENT.

18. ALL HARD WIRING OF FIRE ALARM SYSTEM SHALL BE DONE BY THIS CONTRACTOR AND SHALL MEET BUILDING AND FIRE DEPARTMENT STANDARDS.

19. UPON COMPLETION OF JOB, CONTRACTOR MUST OBTAIN A LETTER OF ACCEPTANCE OF SYSTEM FROM FIRE DEPARTMENT AND SUBMIT TO TRILLIUM'S REPRESENTATIVE.

20. CONTRACTOR SHALL FURNISH ALL NEW CONDUIT, WIRE, BOXES, ETC., AS REQUIRED AND SHALL RECONNECT ALL EXISTING OUTLETS TO REMAIN. ALL DISTURBED ELECTRICAL WORK TO REMAIN, AFTER REMOVAL OF PARTITIONS, CEILINGS, ETC., SHALL BE REROUTED AND RECONNECTED WITH ALL NEW CONDUITS, WIRE, BOXES, OUTLETS, ETC., AS REQUIRED. ALL EXISTING WORK TO REMAIN SHALL BE LEFT IN COMPLETE OPERATING CONDITION.

21. ABANDONED OUTLETS SHALL BE REMOVED COMPLETE WITH ALL WIRING AND CONDUITS. SAME SHALL BE DISCONNECTED, CUT, AND DEAD-ENDED IN AN APPROVED MANNER.

22. PROVIDE GFI TYPE PROTECTION FOR ANY RECEPTACLES WITHIN 5' OF WATER OR LIQUIDS.

23. ALL WORK ON BRANCH CIRCUITRY, FEEDERS, RISERS, AND EQUIPMENT SHALL BE COMPLETED WITH EQUIPMENT OR CIRCUITS DE-ENERGIZED (SHUT DOWN).

TRILLIUM ELECTRICAL NOTES:

1. FURNISH AND INSTALL INCLUDING LABOR, SUPERVISION, MATERIAL, TOOLS, SERVICES, TRANSPORTATION, OVERHEAD COSTS, FEES, PLAN CHECK FEES, INSPECTION CHARGES, ROYALTIES, PROFIT, ETC., A COMPLETE ELECTRICAL INSTALLATION AS SPECIFIED HEREIN AND INDICATED ON THE ELECTRICAL DRAWINGS IN AN APPROVED, NEAT, FIRST-CLASS, FINISHED, SAFE, WORKMANSHIP LIKE MANNER THAT COMPLIES WITH ALL APPLICABLE LOCAL, STATE, FEDERAL, ETC., CODES, ORDINANCES, RULES, REGULATIONS, STANDARDS, ETC. THE ENTIRE ELECTRICAL INSTALLATION SHALL COMPLY WITH OR SURPASS THE MOST RECENT EDITION OF THE NATIONAL ELECTRICAL CODE AND OCCUPATIONAL SAFETY AND HEALTH ACT (OSHA) STANDARDS.

2. ALL MATERIALS AND EQUIPMENT FURNISHED BY THE ELECTRICAL CONTRACTOR SHALL BE NEW OF FIRST CLASS QUALITY, UNLESS NOTED OTHERWISE, FREE FROM DEFECTS, AND CONFORM WITH UNDERWRITERS LABORATORIES, INC. STANDARDS AND BE SO LABELED. MATERIALS, EQUIPMENT, ETC., NOT INDICATED ON DRAWING OR SPECIFIED HEREIN, BUT REQUIRED FOR A SUCCESSFUL AND EFFICIENT COMPLETION OF THE ELECTRICAL INSTALLATION SHALL BE HELD TO BE IMPLIED AND SHALL BE FURNISHED AND INSTALLED FOR NO ADDITIONAL COST. ENCLOSURES FOR ALL EQUIPMENT SHALL BE SUITABLE FOR USE INTENDED, E.G., WEATHERPROOF FOR EXTERIOR AND WET LOCATIONS. ALL EQUIPMENT SHALL BE RATED FOR USE INTENDED, E.G., VOLTAGE, HORSEPOWER, RATING OF DISCONNECT SWITCHES, ETC.

3. MATERIALS, EQUIPMENT, ETC., INCLUDING THOSE FURNISHED BY OTHERS, THAT ARE TO BE INSTALLED BY THE ELECTRICAL CONTRACTOR SHALL BE RECEIVED AND PROPERLY PROTECTED BY THIS CONTRACTOR UNTIL ENTIRE INSTALLATION IS COMPLETE.

4. MAKE NO INSTALLATION OF WORK WHICH WOULD LEAVE INADEQUATE OPERATION OR SERVICING SPACE FOR ANY ITEM FOR THE ENTIRE PROJECT. DRAWINGS ARE NOT INTENDED TO SHOW IN DETAIL ALL FEATURES OF WORK, CHECK LOCATION AT ELECTRICAL WORK TO DETERMINE IN ADVANCE THAT IT CLEARS ALL OPENINGS, STRUCTURAL MEMBERS, ETC. WHERE CONTRACT DOCUMENTS, E.G., DRAWINGS AND SPECIFICATIONS DO NOT MEET WITH MINIMUM CODES, ETC., THIS CONTRACTOR SHALL INSTALL ALL THE MINIMUM REQUIRED MATERIALS AND EQUIPMENT FOR NO ADDITIONAL COST.

5. ALL WIRING SHALL BE INSTALLED IN APPROVED RACEWAYS PER CODE. RACEWAYS SHALL BE APPROVED FOR USE INTENDED. ALL EMT CONDUIT SHALL HAVE COMPRESSION TYPE FITTINGS. PVC CONDUIT AND FITTINGS FOR ALL UNDERGROUND CONDUITS. ALL ELECTRICAL CONDUCTORS SHOWN ARE COPPER, MINIMUM SIZE IS NO. 12 AWG. INSULATION TO BE THHN/THWN FOR WIRE SIZES #6 AND SMALLER THHN/THWN/XHHW FOR WIRE SIZES #4 AND LARGER. THE USE OF "MC" CABLE IS NOT APPROVED.

6. THIS CONTRACT IS TO INCLUDE ALL CONTINGENCIES WHICH MAY ARISE AND WHICH MAY BE REQUIRED TO MAKE A COMPLETE ELECTRICAL SYSTEM.

7. THE ELECTRICAL CONTRACTOR SHALL VISIT SITE AND DETERMINE EXTEND OF THE WORK. AT COMPLETION OF ELECTRICAL INSTALLATION PROVIDE TRILLIUM WITH ACCURATE AS-BUILT DRAWINGS INDICATING ALL VARIATIONS FROM CONTRACT DRAWINGS, AND A LETTER TO THE OWNER'S REPRESENTATIVE STATING PROJECT FULLY COMPLIES WITH ALL CONTRACT DOCUMENTS AND IF NOT, HOW INSTALLATION WAS ACCOMPLISHED. ALL CHANGES SHALL BE SUBJECT TO TRILLIUM'S REPRESENTATIVE'S APPROVAL.

8. PROVIDE NECESSARY LABOR, TOOLS, EQUIPMENT, E.G., VOLTMETER, AMMETER, MEGGER, ETC., AND CHECK ELECTRICAL SYSTEM IN THE PRESENCE OF THE TRILLIUM'S REPRESENTATIVE. ALL TESTING SHALL BE IN ACCORDANCE WITH MANUFACTURER'S RECOMMENDATION OF EQUIPMENT, MATERIAL, ETC., BEING TESTED.

9. THE ELECTRICAL CONTRACTOR SHALL FULLY GUARANTEE THE ENTIRE ELECTRICAL INSTALLATION AND ALL WORK UNDER THIS SECTION FOR A PERIOD OF ONE YEAR FROM THE DATE OF FINAL ACCEPTANCE BY THE OWNER AGAINST ALL EVIDENCE OF IMPERFECT WORKMANSHIP OF FAILURE OR MALFUNCTION OF MATERIALS AND EQUIPMENT. WORK FOUND TO BE DEFECTIVE WITHIN THIS PERIOD SHALL BE REPLACED PROMPTLY AT NO EXPENSE TO THE OWNER.

10. ALL CONDUITS ABOVE GROUND SHALL BE RIGID GALVANIZED STEEL UNLESS NOTED OTHERWISE.

11. ALL ELECTRICAL WORK SHALL BE IN COMPLIANCE WITH ALL LOCAL CITY & COUNTY CODES, NFPA 52 (CNG FUEL SYSTEMS), & NFPA 70 (NEC).

12. ALL WORK SHOWN IS NEW UNLESS OTHERWISE INDICATED.

13. PROVIDE CONDUIT SEAL OFFS AT EACH CONDUIT AS REQUIRED BY NFPA 70 (NEC) ARTICLE 501-15. TERMINATE ALL CONDUITS SUCH THAT THREADS ARE MAX 3" ABOVE FINISHED SLAB. SEALOFFS REQUIRED WITHIN 18" OF ALL BOXES WITHIN CLASS 1 DIVISION 1 (HAZARDOUS) AREAS. ALL SEALOFFS TO BE THE SAME THROUGHOUT WHOLE PROJECT. EYF HORIZONTAL/VERTICAL FORM 5 FITTINGS.

14. ALL WIRING AND CONDUIT FITTINGS AT DISPENSER, DISPENSER PIT, COMPRESSOR, STORAGE VESSELS AND METER SET ASSEMBLY SHALL BE IN COMPLIANCE WITH HAZARDOUS LOCATION AS DEFINED IN NFPA 70 (NEC) ARTICLE 501 AND NFPA 52 (CNG FUEL SYSTEMS). ALL CONDUITS TO BE RIGID AND NO FLEXIBLE CONDUIT (SEAL TIGHT) WILL BE ALLOWED.

15. ALL CONDUIT FITTINGS AND BOXES SHALL BE LISTED AND/OR LABELED BY UNDERWRITERS LABORATORIES OR FACTORY MUTUAL TESTING LABORATORIES. THIS INCLUDES DEVICES, MOTORS AND RELATED ELECTRICAL EQUIPMENT.

16. UNDERGROUND ELECTRICAL CONDUITS SHALL BE PVC CONDUIT AND INSTALLED A MINIMUM OF 8" FROM GAS LINES. ALL BENDS SHALL BE LARGE RADIUS, CONDUIT RUNS OVER 200' WILL HAVE RIGID GALVANIZED STEEL SWEEPS, THAT HAVE BEEN WRAPPED WITH TAPE TO PREVENT CORROSION.

17. CONTRACTOR SHALL VERIFY CONDUIT STUB-UP LOCATION(S) ON PAD PRIOR TO INSTALLATION AND SUBMIT DRAWINGS FOR APPROVAL. ALL CONDUIT STUB-UPS SHALL BE PVC COATED RIDGED STEEL CONDUIT, OR WRAPPED RIDGED STEEL CONDUIT AS APPROVED BY TRILLIUM & OWNER. IF APPROVED RIDGED STEEL CONDUIT WILL BE WRAPPED WITH TWO (2) WRAPS OF 20 MIL CONDUIT WRAP.

18. CONTRACTOR MUST VERIFY ALL MEASUREMENTS AFFECTING HIS WORK AND ASSUME THE RESPONSIBILITY FOR THEIR CORRECTNESS.

19. GROUND RODS SHALL BE TESTED FOR RESISTANCE TO GROUND. WHERE RESISTANCE OF ANY SINGLE GROUND ROD EXCEEDS 25 OHMS, ADDITIONAL GROUND ROD(S) SHALL BE DRIVEN. UNTIL GROUND RESISTANCE OF LESS THAN 25 OHMS IS OBTAINED.

20. ALL GROUNDING STUB-UPS IN CONCRETE FOR EQUIPMENT GROUND SHALL BE PROTECTED BY 1" PVC CONDUIT.

21. ALL EQUIPMENT USED IN HAZARDOUS AREAS SHALL BE LISTED AND/OR LABELED FOR USE IN CLASS 1, GROUP D, AND DIVISION 1 OR 2 AS REQUIRED. CONTRACTOR SHALL PATCH, PAINT, REPAIR, AND CLEAN AS REQUIRED TO MATCH SURROUNDING OF ANY SURFACE DISTURBED OR DAMAGED DURING THE DURATION OF THE PROJECT.

22. CONTRACTOR IS RESPONSIBLE FOR TERMINATION OF ALL CONDUCTORS.

23. UNLESS OTHERWISE NOTED, ALL ELECTRICAL COMPONENTS SHALL BE SUPPLIED BY CONTRACTOR.

24. ALL CONDUCTORS SHALL BE RATED FOR WET LOCATIONS FOR UNDERGROUND INSTALLATIONS & A MIN. OF THHN FOR ABOVE GROUND INSTALLATION.

25. IN CASE OF A CONFLICT BETWEEN SPECIFICATIONS, NOTES AND GENERAL REQUIREMENTS, OR CODES AND STANDARDS FOR THE INSTALLATION – THE MORE EXPENSIVE, OR MORE STRINGENT REQUIREMENTS SHALL GOVERN. OBTAIN CLARIFICATION FROM ENGINEER WHERE CONFLICT IS ENCOUNTERED.

26. SEISMIC REQUIREMENTS: ALL EQUIPMENT PROVIDED SHALL WITHSTAND SEISMIC FORCES DEFINED IN IBC 2012 FOR SEISMIC RISK CATEGORY II AND SEISMIC DESIGN CATEGORY D . THE TERM "WITHSTAND" MEANS THE UNIT WILL REMAIN IN PLACE WITHOUT SEPARATION OF ANY PARTS FROM THE DEVICE WHEN SUBJECTED TO THE SEISMIC FORCES SPECIFIED AND THE UNIT WILL BE FULLY OPERATIONAL AFTER THE SEISMIC EVENT.

GENERAL NOTES

1. ALL LIGHTING SWITCH LEGS SHALL USE A DEDICATED NEUTRAL WIRE.

2. EC SHALL LABEL ALL J-BOXES, RECEPTACLES,AND LIGHTING FIXTURES WITH PANEL AND CIRCUIT NUMBERS, USING DYNO TAGS.

3. EC SHALL PROVIDE STAINLESS STEEL COVER PLATES FOR ALL OUTLETS AND SWITCH PLATES.

4. ALL CONDUIT SHALL RUN PARALLEL TO BUILDING STRUCTURE.

5. ALL WORK SHALL BE PERFORMED IN ACCORDANCE WITH THE LATEST EDITIONS OF THE RULES, REGULATIONS AND CODES OF THE STATE OF COLORADO AND THE LOCAL JURISDICTIONAL AUTHORITY NEC 2008.

6. THIS CONTRACTOR IS RESPONSIBLE FOR COORDINATING WITH ALL OTHER BUILDING TRADES TO ENSURE PROPER INSTALLATION OF SYSTEMS SHOWN.

7. THIS CONTRACTOR SHALL REVIEW EXISTING FIELD CONDITIONS PRIOR TO THE PURCHASE, FABRICATION AND INSTALLATION OF ANY EQUIPMENT, DUCTWORK, PIPING, ETC., AND SHALL INFORM THE ARCHITECT OR GENERAL CONTRACTOR OF ANY DISCREPANCIES FOR RESOLUTION. SEE SPECIFICATION SECTION 15010 FOR MORE REQUIREMENTS.

8. THESE DRAWINGS ARE DIAGRAMMATIC IN NATURE AND DO NOT SHOW EVERY DUCTWORK AND PIPING OFFSET REQUIRED. THIS CONTRACTOR SHALL COORDINATE WITH THE EXISTING, AND OR NEW, STRUCTURE, ELECTRICAL, MECHANICAL, PLUMBING, FIRE PROTECTION AND CEILING TO PROVIDE OFFSETS AS REQUIRED AND APPROPRIATE. DO NOT SCALE DRAWINGS.

9. SOME OF THE CEILING SPACE IS TO BE USED AS A RETURN AIR PLENUM. ALL MATERIALS SHALL CONFORM TO NFPA 90A FOR FIRE AND SMOKE RATINGS.

10. THIS CONTRACTOR SHALL PROVIDE ACCESS TO ALL EQUIPMENT, BOXES, ETC., ABOVE ALL NON-LAYIN CEILINGS AND IN OTHER CONCEALED SPACES FOR SERVICING AND MAINTENANCE.

11. THIS CONTRACTOR SHALL PROVIDE ACCESS TO ALL EQUIPMENT, BOXES, ETC., ABOVE ALL NON-LAYIN CEILINGS AND IN OTHER CONCEALED SPACES FOR SERVICING AND MAINTENANCE.

12. ALL EXPOSED WIRING TO BE IN EMT CONDUIT. WIRING ABOVE LAY IN CEILINGS SHAL BE IN EMT OR MC TYPE CONDUIT EXPOSED RACEWAYS IN APPARATUS BAY WITHIN 12' OF FLOOR TO BE RIGID CONDUIT.

13. THIS CONTRACTOR IS SOLELY RESPONSIBLE FOR THE SPATIAL REQUIREMENTS, ACOUSTICAL, THERMAL, AND ELECTRICAL PERFORMANCE CHARACTERISTICS AND COORDINATION OF ALL INSTALLATION REQUIREMENTS FOR EQUIPMENT SUBSTITUTIONS FROM THAT DEFINED AS THE BASIS FOR DESIGN. REVIEW AND APPROVAL BY THE DESIGN TEAM DOES NOT ALTER OR MITIGATE THIS.

14. THIS CONTRACTOR SHALL VISIT THE PROJECT SITE TO BECOME ACQUAINTED WITH EXISTING CONDITIONS. FAILURE TO DO SO SHALL NOT RELIEVE CONTRACTOR FROM THE RESPONSIBILITY FOR PERFORMING THE WORK.

15. MAINTAIN ALL REQUIRED SERVICE AND ACCESS CLEARANCES REQUIRED BY CODE OR THE MANUFACTURER FOR ALL NEW AND EXISTING EQUIPMENT.

ELECTRICAL SPECIFICATIONS

GENERAL REQUIREMENTS.

SCOPE:

I. FURNISH ALL MATERIALS AND LABOR REQUIRED TO EXECUTE THIS WORK AS INDICATED ON DRAWING AND AS SPECIFIED, AS NECESSARY TO COMPLETE THE CONTRACT. ELECTRICAL WORK SHALL INCLUDE, BUT NOT LIMITED TO, THESE MAJOR ITEMS:
A. COMPLETE FEEDER(S) INSTALLATION AS REQUIRED FOR NEW AND/OR ELECTRICAL APPARATUS AS SHOWN ON SINGLE LINE DIAGRAM.
B. COMPLETE CONNECTION OF MOTOR(S), FURNISHED BY OTHERS
C. COMPLETE ALL ELECTRICAL DEMOLITION AS REQUIRED.
D. TEST OF ENTIRE SYSTEM AND WORK. PRESENT AT THESE LOCATIONS.

II. PERMITS AND FEES: OBTAIN AND PAY FOR ALL NECESSARY PERMITS, INSPECTIONS, EXAMINATIONS AND FEES OR CHARGES NECESSARY FOR EXECUTION AND COMPLETION OF ELECTRICAL WORK.

III. REGULATIONS AND CODES:
A. APPLICABLE CODES: NATIONAL ELECTRIC CODE (20015) CONFORM TO THE PREVAILING EDITION AND AMENDMENTS THERETO OF THE LOCAL BUILDING CODES, PERTINENT NFPA PUBLICATIONS AND TO THE REQUIREMENTS OF FEDERAL, STATE OR OTHER CITY AGENCIES HAVING JURISDICTION.

IV. SHOP DRAWINGS AND SUBMITTAL:
A. CONTRACTOR SHALL SUBMIT SHOP DRAWINGS FOR ENGINEER REVIEW AND APPROVAL. SHOP DRAWING SUBMITTAL SHALL INCLUDE:
1. PANELBOARD(S).
2. TRANSFER SWITCHES
3. SERVICE PANEL
4. AUTO DIALER
5. GENERATOR

V. CONDUIT AND WIRE:
1. A. CONDUCTOR SIZES AND TYPES: USE ONLY COPPER WIRE, TYPE XHHW-2, 600 VOLT INSULATION, STRANDED IN SIZES #8 AND LARGER, SOLID IN SIZES #10 AND SMALLER. CONTROL WIRING SHALL BE #14, STRANDED.
2. ALL CONDUIT BELOW GRADE SHALL BE SCHEDULE 40 PVC. CONDUIT ABOVE GRADE SHALL BE SCHEDULE 80 PVC, UV RESISTANT.
3. ELECTRICAL DEVICES PER THE NFPA AND LOCAL AUTHORITY HAVING JURISDICTION.

VI. THE WARRANTY SET FORTH FOR THIS SYSTEM SHALL CONSIST OF A FULL THREE (3) YEARS FROM THE DATE OF PROJECT COMPLETION. THE CONTRACTOR WARRANTS THE SYSTEM TO BE FREE OF DEFECTS OF WORKMANSHIP OR PRODUCTS AND WILL INSPECT AND REPAIR THE SYSTEM DURING THIS WARRANTY PERIOD AT NO ADDITIONAL COST TO THE OWNER.

B. BIDDERS, BEFORE SUBMITTING PROPOSALS, SHALL VISIT THE SITE AND CAREFULLY EXAMINE THE AREAS AFFECTED BY THE WORK IN THIS CONTRACT, AND SHALL FAMILIARIZE THEMSELVES WITH EXISTING CONDITIONS AND ANY DIFFICULTIES THAT WILL ATTEND THE EXECUTION OF THIS WORK.

2. CONNECTIONS TO EXISTING WORK SHALL BE PERFORMED AS FOLLOWS:

A. INSTALL NEW WORK AND CONNECT TO EXISTING WORK WITH MINIMUM INTERFERENCE TO EXISTING FACILITIES.

B. TEMPORARY SHUTDOWNS OF EXISTING SERVICES:

1. AT NO ADDITIONAL CHARGES.
2. AT TIMES NOT TO INTERFERE WITH NORMAL OPERATION OF EXISTING FACILITIES.
3.

C. ALARM AND EMERGENCY SYSTEMS: NOT TO BE INTERRUPTED.

D. MAINTAIN CONTINUOUS OPERATION OF EXISTING FACILITIES AS REQUIRED WITH NECESSARY TEMPORARY CONNECTIONS BETWEEN NEW AND EXISTING WORK.

E. CONNECT NEW WORK TO EXISTING WORK IN NEAT AND ACCEPTABLE MANNER. RESTORE EXISTING DISTURBED WORK TO ORIGINAL CONDITION INCLUDING MAINTENANCE OF WIRING CONTINUITY AS REQUIRED.

3. REMOVAL AND RELOCATION OF EXISTING WORK:

A. DISCONNECT, REMOVE AND/OR RELOCATE EXISTING MATERIAL, EQUIPMENT, AND OTHER WORK AS NOTED OR REQUIRED FOR PROPER INSTALLATION OF NEW SYSTEM.

B. DISPOSE OF REMOVED ELECTRICAL EQUIPMENT AS DIRECTED IN ACCORDANCE WITH LOCAL CODES AND STANDARDS.

4. CODES AND STANDARDS

A. THE ELECTRICAL INSTALLATION SHALL COMPLY WITH THE FOLLOWING CODES AND STANDARDS:

1. UNDERWRITERS LABORATORIES, INC. (UL).
2. NATIONAL ELECTRICAL CODE OF THE NFPA (NEC).
3. ELECTRICAL CODE 2011 EDITION.
4. INTERNATIONAL BUILDING CODE WITH LOCAL AMENDMENTS.
5. INTERNATIONAL FIRE CODE WITH LOCAL AMENDMENTS.
6. OCCUPATIONAL SAFETY AND HEALTH ACT (OSHA).
7. NATIONAL FIRE PROTECTION ASSOCIATION (NFPA).
8. AMERICAN DISABILITIES ACT (ADA).
9. BUILDING RULES AND REGULATIONS.
10. ALL LOCAL JURISDICTION DIRECTIVES AND REQUIREMENTS.
11. INTERNATIONAL ELECTRICAL TESTING ASSOCIATION INC. ACCEPTANCE TESTING SPECIFICATIONS.

5. SHOP DRAWINGS AND CATALOG CUTSHEETS

A. THE CONTRACTOR SHALL PREPARE AND SUBMIT TO TRILLIUM FOR APPROVAL, DETAILED SHOP DRAWINGS, CATALOG CUTS AND WIRING DIAGRAMS FOR THE FOLLOWING:

1. PANEL BOARDS
2. DISCONNECT SWITCHES
3. LIGHTING FIXTURES
4. WIRING DEVICES
5. TRANSFORMERS
6. CONDUIT FITTINGS, GROUNDING EQUIPMENT

6. SUBSTITUTIONS

A. ANY SUBSTITUTIONS FOR ELECTRICAL ITEMS DESCRIBED IN THIS SPECIFICATION WILL ONLY BE PERMITTED UPON WRITTEN PRIOR APPROVAL BY TRILLIUM. BASE BID SHALL BE FOR SPECIFIED EQUIPMENT.

B. REQUESTS FOR APPROVAL OF SUBSTITUTIONS FOR ITEMS OF LESSER MATERIAL AND/OR LABOR COSTS THAN THOSE SPECIFIED MUST BE ACCOMPANIED BY AN ITEMIZED COST SAVINGS BREAKDOWN TO BE CONSIDERED.

7. QUALITY ASSURANCE

A. THE CONTRACTOR SHALL HAVE HAD EXPERIENCE ON AT LEAST FIVE PROJECTS INVOLVING QUANTITIES AND COMPLEXITIES AT LEAST EQUAL TO THOSE REQUIRED FOR UNDER THIS DIVISIONS OR THE APPLICABLE SECTION THEREOF.

B. ALL WORKMEN PERFORMING UNDER THESE DIVISIONS SHALL BE SKILLED WORKMEN OF THE TRADE INVOLVED

8. INSPECTION

A. ALL STAGES OF THE INSTALLATION WILL BE INSPECTED FOR COMPLIANCE WITH THE REQUIREMENTS OF THE CONTRACT DRAWINGS AND SPECIFICATIONS. REPLACE ANY PORTION OF THE CONSTRUCTION THAT DOES NOT MEET SUCH REQUIREMENTS TO THE SATISFACTION OF TRILLIUM.

PATCHING.

B. IN THOSE PARTITIONS OF THE BUILDING WHERE NEW FLOORS, WALLS OR PARTITIONS ARE REQUIRED TO BE CONSTRUCTED, THE CONTRACTOR SHALL FURNISH AND LOCATE ALL REQUIRED SLEEVES CONSTRUCTED. WHERE SLEEVES AND INSERTS WERE NOT INSTALLED, OR WHERE SLEEVES AND INSERTS WERE INCORRECTLY LOCATED, THE CONTRACTOR SHALL BE RESPONSIBLE FOR THE COST OF ANY REQUIRED CUTTING AND PATCHING.

C. THIS CONTRACTOR SHALL NOT DO ANY CUTTING THAT MAY IMPAIR THE STRENGTH OF BUILDING CONSTRUCTION. NO HOLES ARE TO BE DRILLED INTO THE TENSION SIDE OF STRUCTURAL MEMBERS. CLAMPS AND OTHER APPROVED HOLDING DEVICES ARE TO BE USED. ALL WORK SHALL BE DONE IN A NEAT MANNER BY MECHANICS SKILLED IN THEIR TRADES AND AS APPROVED.

10. RACEWAYS AND BOXES

A. WHERE SIZES OF RACEWAY OR BOXES ARE NOT INDICATED, THE CONTRACTOR SHALL SIZE THESE ITEMS AS REQUIRED FOR THE INSTALLATION. ALL ABOVE GROUND CONDUIT SHALL BE RIGID GALVANIZED THREADED STEEL MINIMUM 3/4" UNLESS OTHERWISE NOTED.

B. FITTINGS FOR RIGID CONDUIT SHALL BE OF THE THREADED TYPE. FITTINGS FOR STEEL CONDUIT SHALL BE HOT DIPPED GALVANIZED MALLEABLE IRON. FITTINGS FOR FLEXIBLE CONDUIT SHALL BE STEEL WITH NYLON INSULATED THROATS.

C. FLEXIBLE METAL CONDUIT SHALL BE USED FOR FINAL CONNECTION OF RECESSED LIGHTING FIXTURES AND OUTLET BOXES IN HUNG CEILINGS, AND WIRING DEVICES INDICATED TO BE INSTALLED IN HUNG CEILINGS OR IN REMOVABLE HOLLOW METAL STUD PARTITION CONSTRUCTION.

D. LIQUID TIGHT GALVANIZED FLEXIBLE STEEL CONDUIT, MINIMUM 18 INCHES LONG, MAXIMUM 36 INCHES LONG, SHALL BE PROVIDED AT ROTATING EQUIPMENT AND TRANSFORMER CONNECTIONS.

E. ALL CONDUIT AND TUBING SHALL BE CUT SQUARE AND REAMED AT THEENDS.

F. PAINT MALE THREADS OF FIELD THREADED RACEWAYS WITH GRAPHITE BASE PIPE COMPOUND. DRAW UP TIGHT WITH COUPLINGS WITH NO EXPOSED THREADS.

G. CONDUIT AND TUBING RUNS SHALL BE MECHANICALLY AND ELECTRICALLY CONTINUOUS FROM THE POINT OF SERVICE TO THE LAST OUTLETS. CONDUIT SHALL ENTER AND BE SECURELY CONNECTED TO CABINET, JUNCTION BOX, PULL BOX OR OUTLET BOX BY MEANS OF LOCK NUTS ON THE OUTSIDE AND INSIDE AND PROVIDED WITH AN INSULATED BUSHING ON THE INSIDE. IN TUBING OR FLEXIBLE METAL CONDUIT, THE ONE COMPRESSION LOCK NUT SHALL BE MADE WRENCH-TIGHT. ALL LOCK NUTS SHALL BE OF THE BONDING TYPE WITH SHARP EDGES AND DIGGING INTO THE METAL WALL OF AN ENCLOSURE AND SHALL BE INSTALLED IN A MANNER THAT WILL ASSURE A LOCKING AND ELECTRICALLY CONTINUOUS INSTALLATION. LOCK NUTS AND BUSHINGS WILL NOT BE REQUIRED WHERE CONDUITS ARE SCREWED INTO TAPPED CONNECTIONS.

H. ALL VERTICAL RUNS OF CONDUIT OR TUBING TERMINATING IN THE BOTTOMS OF WALL BOXES OR CABINETS, OR SIMILAR LOCATIONS, SHALL BE PROTECTED FROM THE ENTRANCE OF FOREIGN MATERIAL PRIOR TO THE INSTALLATION OF CONDUCTORS.

I. UNLESS OTHERWISE SPECIFIED, ALL CONDUIT AND TUBING SHALL BE INSTALLED CONCEALED. IN GENERAL, ALL CONDUIT AND TUBING SHALL BE RUN IN HUNG CEILINGS AND FURRED SPACES, WHERE THEY EXIST. WHERE CONDUIT IS RUN EXPOSED, IT SHALL BE SECURELY SUPPORTED WITH ZINC COATED MALLEABLE IRON PIPE STRAPS OR OTHER APPROVED MEANS. CONDUITS SHALL NOT BE RUN WITHIN ONE FOOT OF AND PARALLEL TO HOT WATER PIPES. CONDUITS SHALL BE RUN PARALLEL OR PERPENDICULAR TOBUILDING STRUCTURAL ELEMENTS.

J. CONDUIT SYSTEMS SHALL BE INSTALLED COMPLETE BEFORE ANY CONDUCTORS ARE DRAWN IN. WIRE PULLING LUBRICANTS, WHEN UTILIZED, SHALL BE IN ACCORDANCE WITH UL REQUIREMENTS REGARDING THE SPECIFIC CONDUCTOR OR CABLE INSULATION AND RACEWAY MATERIAL.

K. SHERARDIZED OR HOT DIPPED GALVANIZED STAMPED STEEL OR ELECTRO-GALVANIZED CAST IRON OR COPPER FREE CAST ALUMINUM ALLOY OUTLET BOXES SHALL BE PROVIDED FOR EVERY OUTLET CALLED FOR ON DRAWINGS, SUITABLE FOR THE NUMBER AND ARRANGEMENT OF CONDUITS, CABLES, LOCATION, ETC. WHERE REQUIRED AND APPROVED BY ENGINEER, EXTRA DEEP OR EXTRA SHALLOW OUTLET BOXES SHALL BE USED TO FACILITATE THE INSTALLATION OF THE CONDUIT SYSTEM.

L. PULL AND SPLICE BOXES SHALL BE CODE GAUGE GALVANIZED STEEL OF SIZE INDICATED OR REQUIRED TO MEET CALIFORNIA CODE SUFFICIENT TO PULL, RACK AND SPLICE CABLES CONTAINED THEREIN. PROVIDE A GROUND LUG WELDED TO BOXES CONTAINING FEEDER CONDUCTORS.

M. PROVIDE STEEL CORE NYLON ROPE DRAG LINE WITH TERMINAL BALL IN ALL EMPTY CONDUITS OVER 10' LONG.

SHOWN ON DRAWINGS. IN CERTAIN LOCATIONS, THE REQUIRED HEIGHTS WILL VARY TO ACCOMMODATE EQUIPMENT TO BE LOCATED PROPERLY IN THE DRAWINGS, OR SHALL BE DETERMINED AT THE CONSTRUCTION SITE BY TRILLIUM'S REPRESENTATIVE.

E. CEILING OUTLET BOXES MUST BE ACCESSIBLE FROM FIXTURE SERVED.

12. WIRING DEVICES

A. WIRING DEVICES SHALL BE OF THE MOLDED COMPOSITION TYPE, INDUSTRIAL SPECIFICATION GRADE, UNLESS OTHERWISE INDICATED. WIRING DEVICES SHALL BE AS MANUFACTURED BY LEVITON, LUTRON, HUBBELL, RUSSELL STOLL OR APPROVED EQUAL. ALL WIRING DEVICES SHALL BE WHITE IN GENERAL UNLESS OTHERWISE SELECTED BY TRILLIUM OR OTHERWISE INDICATED IN CONTRACT DOCUMENTS FOR SPECIFIC FUNCTIONS.

B. WALL SWITCHES SHALL BE INDUSTRIAL SPECIFICATION GRADE AND SHALL HAVE ALTERNATING CURRENT RATINGS EQUAL TO FULL NOMINAL CAPACITY WHEREVER HANDLING TUNGSTEN FILAMENT OR INDUCTIVE LOADS AND THEN SHALL BE OF THE FLUSH QUIET TUMBLER TYPE. SWITCHES SHALL BE WHITE IN COLOR (OR COLOR AS SELECTED BY TRILLIUM) OR OTHER COLOR TO INDICATE SPECIAL FUNCTION.

1. 120/277 VOLT AC, 20 AMP, SINGLE POLE, ROCKER TYPE, SELF GROUNDING LEVITON# 5621-2
2. 120/277 VOLT AC, 20 AMP, THREE WAY, ROCKER TYPE, SELF GROUNDING LEVITON# 5623-2
3. 20 AMP, AC, PILOT TYPE, ROCKER TYPE, SELF GROUNDING, 120V SINGLE POLE - LEVITON #5628-2, 120V THREE WAY - LEVITON #5638-2, 277V SINGLE POLE - LEVITON #5629-2, 277V THREE WAY - LEVITON #5639-2

C. RECEPTACLES SHALL BE INDUSTRIAL SPECIFICATION GRADE OF THE NEMA STANDARD CONFIGURATION FOR EACH APPLICATION USING A HORSESHOE SHAPED GROUNDING POLE, AS FOLLOWS:

1. 120 VOLT CONVENIENCE: DUPLEX RECEPTACLE, 15 AMPERE 125 VOLT RATED, PARALLEL BLADE AND U SHAPED GROUNDING CONTACT, SIDE WIRED. LEVITON 16242.
2. 120 VOLT APPLIANCE: DUPLEX RECEPTACLE, 20 AMPERE 125 VOLT RATED, PARALLEL BLADE AND U SHAPED GROUNDING CONTACT, SIDE WIRED. LEVITON 16342.
3. OTHER RECEPTACLE TYPES AS REQUIRED SHALL BE SPECIFIED ON DRAWINGS OR SYMBOLS LIST.

D. ALL RECEPTACLES AND SWITCHES SHALL BE SIDE WIRED WITH CONDUCTORS TERMINATED AT SCREW TERMINALS. PUSH IN WIRING WILL NOT BE PERMITTED.

E. SWITCHES SHALL BE INSTALLED AT THE STRIKE SIDE DIRECTLY ADJACENT TO THE ENTRANCE DOOR OF THE ROOM. CHECK THE DRAWINGS FOR DOOR SWINGS SO THAT ALL SWITCHES SHALL BE LOCATED ON THE LOCK SIDE OF THE OPENINGS.

F. ALL DEVICE PLATES FOR WALL OUTLETS (LIGHTING CONTROL SWITCH, POWER, DATA, TELEPHONE, TV, ETC.) SHALL BE LEVITON. DEVICE PLATES FOR TELEPHONE, DATA AND TV OUTLETS SHALL CONTAIN APPROPRIATE JACKS; COORDINATE WITH ENGINEER AND OWNER.

13. GROUNDING

A. TRANSFORMERS, METAL RACEWAYS, METAL ENCLOSURES OF ELECTRICAL DEVICES LIGHTING FIXTURES, ELECTRICAL EQUIPMENT AND OTHER EQUIPMENT SHALL BE COMPLETELY GROUNDED IN AN APPROVED MANNER TO NEAREST EFFECTIVELY GROUNDED BUILDING STEEL OR COLD WATER PIPE, IN ACCORDANCE WITH THE REQUIREMENTS OF THE APPLICABLE CODES AND AUTHORITIES. THIS IS IN ADDITION TO THOSE GROUNDING CONDUCTORS REQUIRED BY THE DRAWINGS.

B. ALL PROPER HARDWARE REQUIRED FOR A COMPLETE GROUNDING SYSTEM SHALL BE INSTALLED BY THE CONTRACTOR.

14. EQUIPMENT MOUNTING

A. PROVIDE INSERTS, EXPANSION SHIELD LUGS, ANCHORS, BOLTS WITH NUTS AND WASHER SHIM OR ANY OTHER TYPE OF FASTENING DEVICES REQUIRED TO FASTEN PANELS OR OTHER EQUIPMENT, TO FOUNDATIONS, FLOORS, WALLS OR CEILINGS. UNLESS OTHERWISE SPECIFIED HEREIN OR SHOWN ON THE CONTRACT DRAWINGS, ALL FASTENERS SHALL BE HOT DIPPED GALVANIZED AND OF SIZES AND TYPES RECOMMENDED BY THE EQUIPMENT MANUFACTURER AND AS APPROVED BY TRILLIUM.

15. WIRING

A. UNLESS OTHERWISE SPECIFIED OR SPECIFICALLY INDICATED ON THE DRAWINGS, ALL CONDUCTORS FOR LIGHTING AND POWER SHALL BE TINNED SINGLE CONDUCTOR ANNEALED COPPER BUILDING WIRES OF MINIMUM 98% CONDUCTIVITY WITH DISTINCTIVE COLOR MARKING, 600 VOLT INSULATION, COLOR CODED AS SPECIFIED HEREINAFTER. CONDUCTORS SHALL BE STRANDED, TYPE THHN/THWN. NO SOLID CONDUCTORS WILL BE ALLOWED.

B. WIRING FOR LIGHTING AND POWER SHALL BE #12 AWG MINIMUM. CONTROL WIRING SHALL BE #12 AWG MINIMUM, UNLESS OTHERWISE INDICATED.

C. ALL WIRES 1/0 AND LARGER WILL BE MEGGERED TO ENSURE INSULATION INTEGRITY BY CONTRACTOR. CONTRACTOR WILL SUBMIT A REPORT TO TRILLIUM STATING COMPLIANCE AND RESULTS OF TEST.

D. TESTING SHALL BE COMPLETED PHASE TO PHASE AND PHASE TO GROUND.

16. COLOR CODING

A. THE CONTRACTOR SHALL MATCH THE COLOR-CODING THAT IS BEING USED IN THE BUILDING, IF APPLICABLE, OR AS FOLLOWS (DEVIATION DUE TO LIMITED QUANTITIES OF CABLE MAY BE PERMITTED UPON WRITTEN APPROVAL BY THE ENGINEER):

	SYSTEM VOLTAGE	
PHASE	120/208V	277/480V
A	BROWN	BLACK
B	ORANGE	RED
C	YELLOW	BLUE
NEUTRAL	GRAY	WHITE
GROUND	GREEN	GREEN
ISOLATED GROUND		GREEN/YELLOW STRIPE

17. IDENTIFICATION

EQUIPMENT AND CONDUCTORS SHALL BE IDENTIFIED AS FOLLOWS:

A. ALL MAJOR COMPONENTS OF THE DISTRIBUTION SYSTEM SUCH AS STARTERS, DISCONNECT SWITCHES, PANEL BOARD, ETC. MUST HAVE NAMEPLATES WITH EQUIPMENT IDENTIFICATION, VOLTAGE AND PHASE RATINGS AND SOURCE OF FEED OR CIRCUIT UTILIZATION. PANEL BOARDS SHALL HAVE TYPED DIRECTORIES.

B. ALL STARTERS, DISCONNECT SWITCHES AND CONTROLS SHALL HAVE NAMEPLATES IDENTIFYING THE EQUIPMENT SERVED. NAMEPLATES SHALL BE LAMINATED PHENOLIC, WITH WHITE LETTERS ON A BLACK FIELD SECURED WITH FLUSHED FASTENINGS. LETTERS TO BE 1/4" HIGH, MINIMUM.

C. ALL WIRES SHALL BE IDENTIFIED BY CIRCUITS IN ALL CABINETS, BOXES, WIRING TROUGH AND OTHER ENCLOSURES, AND AT ALL TERMINAL POINTS (I.E., RECEPTACLES, ETC.).

D. THE CIRCUIT DESIGNATIONS SHALL BE AS SHOWN ON THE CONTRACT DRAWINGS OR AS DIRECTED BY THE ENGINEER. TAGS SHALL BE ATTACHED TO WIRES SO THAT THEY WILL BE READILY VISIBLE.

E. BRADY-B500 VINYL CLOTH WIRE AND TERMINAL MARKERS SHALL BE USED FOR ALL WIRE IDENTIFICATION OR APPROVED EQUAL.

F. ALL CONDUCTORS TO BE IDENTIFIED WITH NON-REPETITIVE NUMBERS, ALL CONDUCTORS TO BE IDENTIFIED ON BOTH ENDS, AND WITHIN 18" OF CONDUIT ENTRANCE OF ENCLOSURE.

18. SAFETY SWITCHES

A. SAFETY TYPE DISCONNECTING SWITCHES SHALL BE RATED AT 250 OR 600 VOLTS AS REQUIRED BY THE UTILIZATION VOLTAGE AND SHALL BE QUICK-MAKE, QUICK-BREAK TYPE, HORSEPOWER RATED. SWITCHES SHALL BE MANUFACTURED BY AMERICAN CIRCUIT BREAKER CORP., SIEMENS, SQUARE D OR APPROVED EQUAL. PROVIDE HEAVY DUTY SWITCHES.

B. ALL PARTS OF THE SWITCH SHALL BE MOUNTED ON INSULATED BASE TO PERMIT REPLACEMENT OF ANY PARTS FROM THE FRONT OF THE SWITCH. ALL CURRENT CARRYING PARTS SHALL BE OF HIGH CONDUCTIVITY COPPER, DESIGNED TO CARRY RATED LOAD WITHOUT EXCESSIVE HEATING. SWITCH CONTACTS SHALL BE SILVER TUNGSTEN TYPE OR PLATED TO PREVENT CORROSION, PITTING AND OXIDATION AND TO ASSUME SUITABLE CONDUCTIVITY. FUSE CLIPS, WHERE REQUIRED, SHALL BE OF THE POSITIVE PRESSURE REJECTION TYPE. SWITCHES SHALL BE CAPABLE OF WITHSTANDING THE AVAILABLE FAULT CURRENT OR LET-THROUGH CURRENT BEFORE THE FUSE OPERATES WITHOUT DAMAGE OR CHANGE IN RATING. PROVIDE GROUND LUGS IN ALL SWITCHES. PROVIDE INTERLOCKING COVER WHICH NORMALLY CANNOT BE OPENED WHEN SWITCH IS IN "ON" POSITION AND WITH MEANS OF BYPASSING THE MECHANICALLY INTERLOCK DOOR AND HANDLE.

i:\2016\2016-235-gunnisonco\001-cngstation\H-Dwgs\Mep\Working\GunnisonCNG-Elec.dwg Plotted: 4/13/2017 8:46 AM By: Ty Costello

COLORADO LICENSED JEFF M. GREBE 26072 PROFESSIONAL ENGINEER

SGM
118 West Sixth Street, Suite 200
Glenwood Springs, CO 81601
970.945.1004 www.sgm-inc.com

Gunnison County
CNG Fill Station / 508 Tomichi Ave,
Gunnison CO

#	Revision	Date	By
1	Trillium Final Review #1	04/12/2017	

Notes

Job No.	2016-235.001
Drawn by:	TC
Date:	02/16/2017
QC: JG	PE: JG
File:	GunnisonCNG-Elec

E-14 Of 34

SPECIFICATIONS CONTINUED

C. LUGS SHALL BE RATED FOR THE USE OF CABLES WITH EITHER 75 DEG. C OR 90 DEG. C INSULATION WITHOUT DERATING. MULTI-BARREL LUGS SHALL BE PROVIDED TO ACCOMMODATE PARALLEL FEEDER CABLES AND/OR TAPS AS REQUIRED. "DOUBLE LUGGING" WILL NOT BE PERMITTED.

D THE CONTRACTOR SHALL FURNISH AND INSTALL ALL DISCONNECT SWITCHES, COPPER DETAIL, TROUGH, ETC., AS SHOWN IN ELECTRICAL DRAWINGS, AND WIRING BETWEEN ALL DISCONNECT SWITCHES, STARTERS, LIGHTING AND POWER PANELS AS WELL AS TO ALL MECHANICAL EQUIPMENT AS SHOWN IN ELECTRICAL DRAWINGS.

19. FUSES

A. FUSES SHALL BE OF THE RATINGS SHOWN ON THE DRAWINGS AND THEY SHALL BE UL LISTED. WHERE SIZES ARE NOT SHOWN, THEY SHALL BE OF REQUIRED SIZE FOR PROPER OPERATION OF EQUIPMENT PROTECTED.

B. ALL FUSES SHALL HAVE AN INTERRUPTING CAPACITY AS REQUIRED TO INTERRUPT THE AVAILABLE SHORT CIRCUIT CURRENT. CURRENT LIMITING FUSES SHALL BE PROVIDED.

C. THE TIME CURRENT CHARACTERISTICS AND RATINGS OF FUSES SHALL BE SUCH THAT POSITIVE SELECTIVE COORDINATION IS ASSURED.

20. PANEL BOARDS

A PANEL BOARDS SHALL BE DESIGNED FOR THE SPECIFIED VOLTAGES AND NUMBER OF CIRCUIT BREAKERS AS SHOWN IN THE SCHEDULES. PANEL BOARD INTERIORS AND CIRCUIT BREAKERS SHALL BE MANUFACTURED BY GENERAL ELECTRIC, EATION/CUTLER-HAMMER, AMERICAN CIRCUIT BREAKER CORP., SIEMENS, SQUARE D OR APPROVED EQUAL.

B. PANEL BOARD CABINETS SHALL BE OF THE GENERAL PURPOSE DEAD FRONT TYPE FOR FLUSH OR SURFACE MOUNTING AS INDICATED ON THE DRAWINGS. TRIM OF PANEL BOARD FRONT SHALL BE MADE OF COLD ROLLED SHEET STEEL OF NOT LESS THAN 12 GAUGE PROVIDED WITH A COAT OF ZINC CHROMATE PRIMER AND ONE FINISH COAT OF ANSI-61LIGHT GRAY ENAMEL. TRIMS SHALL HAVE FLUSH CLOSING DOORS OF SHEET STEEL HAVING CONCEALED CONTINUOUS HINGES COMPLETE WITH CHROME PLATED FLUSH TYPE COMBINATION LOCK AND CATCH. ALL CNG PANELS SHALL BE KEYED ALIKE. GUTTER SPACE SHALL CONFORM TO CALIFORNIA CODE REQUIREMENTS.

C. BUS BARS SHALL BE OF HARD DRAWN COPPER AND SHALL EXTEND FULL HEIGHT OF PANEL. PROVIDE A SEPARATE AND ISOLATED GROUND BUS IN ADDITION TO THE NEUTRAL BUS WHERE INDICATED IN THE SCHEDULES.

D. THE PHASE BUS TO WHICH EACH SINGLE POLE BRANCH IS CONNECTED SHALL BE SO ARRANGED THAT THE SAME RELATIONSHIP OF PHASE SEQUENCE IS MAINTAINED FOR EACH CONSECUTIVE POLE.

E. CIRCUIT BREAKERS SHALL BE BOLT-DOWN TYPE. MINIMUM AIC RATING SHALL BE 10,000 A FOR 250 VOLT CLASS AND 14,000 A FOR 600 VOLT CLASS OR AS INDICATED IN THE SCHEDULE. CIRCUIT BREAKERS SHALL BE IN ACCORDANCE WITH AVAILABLE SHORT CIRCUIT CURRENT.

F PROVIDE HACR TYPE CIRCUIT BREAKERS FOR HVAC EQUIPMENT CIRCUITS.

G. ALL PANEL BOARDS SHALL BE BALANCED TO WITHIN 10% DEVIATION BETWEEN PHASES PRIOR TO FINAL PAYMENT, IN SO FAR AS IS POSSIBLE.

H. ALL LUGS, BUSSING AND SECTIONS WILL BE TORQUED ACCORDING TO PANEL BOARD MANUFACTURES RECOMMENDATIONS. CONTRACTOR TO SUBMIT A REPORT TO TRILLIUM STATING COMPLIANCE AND TORQUE SETTINGS.

21 DRY TYPE TRANSFORMERS

A. TRANSFORMERS SHALL BE DRY TYPE, TWO WINDING, DESIGNED FOR 460V DELTA PRIMARY, 208/120V WYE SECONDARY, 3 PHASE, 60 HZ SERVICE. OPEN DELTA OR T-WOUND TRANSFORMERS WILL NOT BE ACCEPTABLE.

B ALL INSULATED MATERIALS SHALL BE 200 DEGREES C CLASS.

C. TRANSFORMERS SHALL BE DESIGNED NOT TO EXCEED 115 DEGREES RISE ABOVE 40 DEGREES C AMBIENT TEMPERATURE AT FULL LOAD.

D. TRANSFORMER SHALL HAVE A MINIMUM OF FOUR 2-1/2% FULL CAPACITY TAPS, TWO ABOVE AND TWO BELOW NORMAL.

E. WINDINGS SHALL BE COPPER.

F. TRANSFORMERS SHALL BE AS MANUFACTURED BY GENERAL ELECTRIC, EATON/CUTLER HAMMER, SORGEL OR SQUARE D OR APPROVED EQUAL.

G. PROVIDE SYSTEM AND EQUIPMENT GROUNDING IN ACCORDANCE WITH NEC.

H. CONNECT ISOLATED GROUNDING CONDUCTORS TO TRANSFORMER NEUTRAL GROUNDING POINT AS REQUIRED

22 ELECTRICAL CODE CLASS 1 DIVISION 1 LOCATION REQUIREMENTS

A. IN CLASS 1 LOCATIONS, THE FOLLOWING PROVISIONS SHALL BE OBSERVED:

1. NO SERVICE ENTRANCE EQUIPMENT, SWITCHBOARDS OR PANEL BOARDS SHALL BE INSTALLED UNLESS OF A TYPE APPROVED FOR USE IN CLASS 1, DIV 1 AREAS.

2. RIGID CONDUIT WITH EXPLOSION PROOF JOINTS AND FITTINGS SHALL BE EMPLOYED AS THE TYPE OF WIRING. WHERE IT IS NECESSARY TO EMPLOY FLEXIBLE CONNECTIONS, AS AT MOTOR TERMINALS, A FLEXIBLE FITTING OF THE EXPLOSION PROOF TYPE SHALL BE USED. AT POINTS WHERE CONDUIT TERMINATES IN AN ENCLOSURE IN WHICH ARCING OR SPARKING IS LIKELY TO OCCUR, SUCH AS AT MOTOR TERMINALS, SWITCH BOXES AND THE LIKE, AND WHEREVER A CONDUIT LEADS FROM A HAZARDOUS TO A NONHAZARDOUS LOCATION, THE CONDUIT SHALL BE SEALED OFF BY A SEALING COMPOUND WHICH IS NOT AFFECTED BY THE SURROUNDING ATMOSPHERE OR LIQUIDS, AND WHICH HAS A MELTING POINT OF NOT LESS THAN TWO HUNDRED DEGREES FAHRENHEIT. THE SEALING COMPOUND SHALL HAVE A THICKNESS OF NOT LESS THAN FIVE-EIGHTHS INCH. JOINTS IN RIGID CONDUIT MADE WITH THREADED COUPLINGS HAVING FIVE FULL THREADS ENGAGED ARE RECOGNIZED AS BEING EXPLOSION PROOF.

3. FUSES SHALL NOT BE INSTALLED UNLESS MOUNTED WITHIN EXPLOSION PROOF ENCLOSURES. THE FUSE CUTOUT BASES AND THEIR ENCLOSURES SHALL BE APPROVED AS UNIT DEVICES FOR USE IN CLASS 1, DIV 1 AREAS. CIRCUIT BREAKERS, IF USED, SHALL BE OF A TYPE APPROVED FOR USE IN CLASS 1, DIV 1 AREAS.

4. MOTORS SHALL BE CLASS 1, DIV 1 RATED.

5. MOTOR CONTROLLERS, THERMAL CUTOUTS, SWITCHES, RELAYS, THE SWITCHES AND CONTACTORS OF AUTO TRANSFORMER STARTERS, RESISTANCE OR IMPEDANCE DEVICES OR OTHER DEVICES OR APPARATUS WHICH, IN THEIR NORMAL OPERATION, TEND TO CREATE ARCS, SPARKS, OR HIGH TEMPERATURES, SHALL NOT BE INSTALLED UNLESS SUCH DEVICES OR APPARATUS ARE OF A TYPE APPROVED FOR USE IN CLASS 1, DIV 1 AREAS. MOTOR CONTROLLERS SHALL PREFERABLY BE OF THE REMOTE CONTROL TYPE WITH THE MAIN CONTACTORS LOCATED AT A POINT WHERE THE HAZARDOUS CONDITIONS OF THIS CLASS DO NOT PREVAIL. AUXILIARY CONTROL PUSH BUTTON OR SWITCHES OF A TYPE APPROVED FOR USE IN CLASS 1, DIV 1 AREAS MAY BE PLACED IN THE MOST CONVENIENT LOCATIONS.

6. ELECTRIC HEATING APPLIANCES SHALL NOT BE USED UNLESS OF A TYPE APPROVED FOR THE PARTICULAR LOCATION OR TYPE OF MATERIAL IN OR WITH WHICH THEY ARE USED.

7. SWITCHES CONTROLLING LIGHTING CIRCUITS SHALL NOT BE INSTALLED UNLESS OF A TYPE APPROVED FOR USE IN CLASS 1, DIV 1 AREAS.

8. LAMPS IN FIXED POSITIONS SHALL BE ENCLOSED IN A MANNER APPROVED FOR CLASS 1, DIV 1 AREAS AND SHALL BE PROPERLY PROTECTED BY SUBSTANTIAL METAL GUARDS OR OTHER APPROVED MEANS WHERE EXPOSED TO BREAKAGE. LAMPS SHALL NOT BE OF THE PENDANT TYPE UNLESS SUPPORTED BY AND SUPPLIED THROUGH HANGERS OF RIGID CONDUIT OR FLEXIBLE CONNECTORS APPROVED FOR CLASS 1, DIV 1 AREAS. WHERE RUBBER COVERED WIRE IS USED, IT SHALL HAVE INSULATION NOT LESS THAN THREE SIXTY-FOURTHS OF AN INCH THICK.

9. SUFFICIENT GENERAL ILLUMINATION SHALL BE PROVIDED BY FIXED LIGHTING UNITS TO ELIMINATE, SO FAR AS POSSIBLE, THE NEED FOR PORTABLE LAMPS. WHEN PORTABLE LAMPS ARE NECESSARY, THEY SHALL BE ENCLOSED IN A MANNER APPROVED FOR CLASS 1, DIV 1 AREAS AND SHALL BE PROPERLY PROTECTED BY SUBSTANTIAL METAL OR OTHER TYPES OF GUARDS TO PREVENT BREAKAGE. SOCKETS FOR PORTABLE LAMPS SHALL BE OF THE KEYLESS MOLDED COMPOSITION TYPE WITH NO EXPOSED METAL PARTS.

10. WHEN NECESSARY TO USE PORTABLE LAMPS OR OTHER PORTABLE CURRENT CONSUMING DEVICES, FLEXIBLE CORD APPROVED FOR HARD USAGE, SUCH AS TYPE S OR TYPE PA, SHALL BE USED. SUCH A FLEXIBLE CORD SHALL CONTAIN ONE EXTRA INSULATED CONDUCTOR WHICH SHALL BE PROPERLY CONNECTED TO FORM A GROUNDING CONNECTION FOR METAL LAMP GUARDS, MOTOR FRAMES AND ALL OTHER EXPOSED METAL PORTIONS OF SUCH PORTABLE LAMPS AND DEVICES.

11. CONNECTIONS OF PORTABLE CORDS DIRECT TO SUPPLY CONDUCTORS SHALL FIRST BE MADE MECHANICALLY SECURE AND SHALL THEN BE SOLDERED AND HEAVILY TAPED. IN ADDITION, THE CORD SHALL BE SECURELY SUPPORTED SO THAT THE PROBABILITY OF A BREAK IN THE CONDUCTORS AT THIS POINT WILL BE MINIMIZED.

12. RECEPTACLES AND ATTACHMENT PLUGS, IF USED, SHALL BE SO CONNECTED AS A PART OF A UNIT DEVICE WITH AN EXPLOSION PROOF INTERLOCKING SWITCH THAT THE PLUG CANNOT BE REMOVED WHILE THE SWITCH IS IN THE "ON" POSITION, OR APPROVED DEVICES WHICH SEAL THE ARC, MADE WHEN CURRENT IS INTERRUPTED, BY MEANS OF AN EXPLOSION PROOF ENCLOSURE, SHALL BE USED. SUCH RECEPTACLES AND PLUGS SHALL BE OF THE POLARIZED TYPE PROVIDING A CONNECTION FOR THE GROUNDING WIRE OF THE PORTABLE CORD.

13. THE EXPOSED NONCURRENT CARRYING METAL PARTS OF EQUIPMENT, SUCH AS THE FRAMES OR METAL EXTERIORS OF MOTORS, FIXED OR PORTABLE APPLIANCES, FIXTURES, CABINETS, CASES AND CONDUIT SHALL BE GROUNDED AS DESCRIBED ABOVE. THE LOCKNUT BUSHING AND THE DOUBLE LOCKNUT TYPE OF CONTACT SHALL NOT BE DEPENDED UPON FOR BONDING PURPOSES, BONDING JUMPERS WITH PROPER FITTINGS OR OTHER APPROVED MEANS BEING REQUIRED TO ASSURE AN EFFECTIVE GROUNDING CIRCUIT.

14. THERE SHALL BE NO EXPOSED LIVE PARTS.

23. LIGHTING FIXTURES

GENERAL

A. THIS CLAUSE OF THE SPECIFICATIONS COVERS THE FURNISHING OF LABOR, MATERIALS, EQUIPMENT AND THE INSTALLATION OF ALL LIGHTING FIXTURES, LIGHTING, EQUIPMENT AND LAMPS, INCLUDING THE CONNECTION OF FIXTURES AND EQUIPMENT TO THE ELECTRICAL WIRING SYSTEM AS SHOWN ON PLANS.

B. THE CONTRACTOR IS DIRECTED TO REVIEW THE APPLICABLE ELECTRICAL DRAWINGS FOR DETAILS ON FIXTURE CONSTRUCTION AND INSTALLATION MEDIA FOR FIXTURES TO BE PURCHASED BY ELECTRICAL CONTRACTOR.

C. ALL LUMINARIES AND LIGHTING EQUIPMENT SHALL BE DELIVERED TO THE PREMISES COMPLETE, INCLUDING ALL MOUNTING ACCESSORIES AND COMPONENTS NECESSARY FOR THE PROPER OPERATION OF THE EQUIPMENT EXCLUSIVE OF LAMPS.

D. ALL FIXTURES AND COMPONENTS SHALL BE MADE IN ACCORDANCE WITH THE NEC CODE AND SHALL CONFORM TO ALL APPLICABLE UL REQUIREMENTS.

E. LAMPS SHALL BE MANUFACTURED BY GENERAL ELECTRIC, WESTINGHOUSE, OSRAM/SYLVANIA OR PHILLIPS. ALL FLUORESCENT LAMPS SHALL BE ENERGY SAVING TYPE. INCANDESCENT LAMPS (INCLUDING ANY HALOGEN TYPE) SHALL BE 130 VOLT RATED, LONG LIFE TYPE. PROVIDE ALL LAMPS REQUIRED. PROVIDE ONE SPARE LAMP OF EACH TYPE UTILIZED IN THE PROJECT.

F. ALL LAMPS INCLUDING FLUORESCENT TUBES, INCANDESCENT BULBS, ETC., ARE TO BE GUARANTEED FOR A MINIMUM 3 MONTH PERIOD. DURING THIS THREE MONTH PERIOD THE CONTRACTOR IS TO REPLACE, AT NO COST TO THE OWNER, ANY "BURNED-OUT" LAMPS. THE THREE MONTH PERIOD IS TO COMMENCE AT THE COMPLETION OF THE PAINTING PHASE OF THE PROJECT.

G. INSTALLATION AND LOCATING OF FIXTURES

H. FIXTURE LOCATION AS INDICATED ON THE ELECTRICAL DRAWINGS IS GENERALIZED AND APPROXIMATE. THE CONTRACTOR SHALL CAREFULLY VERIFY FIXTURE LOCATION WITH TRILLIUM REPRESENTATIVE, REFLECTED CEILING PLAN AND OTHER REFERENCE DATA PRIOR TO INSTALLATION.

I. CEILING JUNCTION BOXES MUST BE ACCESSIBLE FROM FIXTURE SERVED.

J. LIGHTING FIXTURE HOOKUP WIRE

K. SPLICES SHALL NOT BE PERMITTED IN ANY RUN OF FIXTURE HOOKUP WIRE.

L. CONNECTIONS TO BRANCH CIRCUIT CONDUCTORS AND TO EXISTING FIXTURE WIRING SHALL BE MADE BY INSULATED SPRING CONNECTORS OR CRIMP TYPE CONNECTORS.

WIRING

M. UNLESS OTHERWISE SPECIFIED OR SHOWN ON DRAWINGS, ALL WIRING IN CONJUNCTION WITH INCANDESCENT FIXTURES SHALL CONFORM TO THE REQUIREMENTS OF THE LATEST ISSUE OF THE NATIONAL ELECTRICAL CODE AND SHALL BE NOT LESS THAN #16 AWG. WIRING SHALL BE PROTECTED WITH TAPE OR TUBING AT ALL POINTS WHERE ABRASION IS LIABLE TO OCCUR. WIRING SHALL BE CONCEALED WITHIN FIXTURE CONSTRUCTION, EXCEPT WHERE THE FIXTURE DESIGN OR MOUNTING DICTATES OTHERWISE.

N. CONNECTIONS OF WIRES TO TERMINALS OF LAMPHOLDERS AND OTHER ACCESSORIES SHALL BE MADE IN A NEAT AND WORKMANLIKE MANNER AND SHALL BE ELECTRICALLY AND MECHANICALLY SECURE WITH NO LOOSE STRANDS PROTRUDING. THE NUMBER OF WIRES EXTENDING TO OR FROM THE TERMINALS OF A LAMPHOLDER SHALL NOT EXCEED THAT WHICH THE ACCESSORY IS DESIGNED TO ACCOMMODATE.

O. JOINTS IN WIRING WITHIN LIGHTING FIXTURES AND CONNECTIONS OF THE FIXTURE WIRING TO THE WIRING OF THE BUILDING SHALL BE SO SPLICED THAT THEY WILL BE MECHANICALLY AND ELECTRICALLY SECURE AND THEN SOLDERED AND TAPED TO PROVIDE INSULATION EQUAL TO THAT OF THE CONDUCTORS BEING JOINED. IN LIEU OF SOLDER AND TAPE, APPROVED TYPES OF ADEQUATELY INSULATED SOLDERLESS PRESSURE CRIMPED TYPE CONNECTORS MAY BE FURNISHED, PROVIDED SIZES USED, METHOD OF APPLICATION AND TOOLS EMPLOYED ARE IN ACCORDANCE WITH THE CONNECTOR MANUFACTURER'S RECOMMENDATIONS.

P. WIRING CHANNELS AND WIREWAYS SHALL BE FREE FROM PROJECTIONS AND ROUGH OR SHARP EDGED THROUGHOUT, AND ALL POINTS OR EDGES OVER WHICH CONDUCTORS MUST PASS AND MAY BE SUBJECT TO INJURY OR WEAR SHALL BE ROUNDED OR BUSHED. INSULATED BUSHINGS SHALL BE INSTALLED AT POINTS OF ENTRANCE AND EXIT OF FLEXIBLE WIRING.

FIXTURES

Q. THE DRIVERS SHALL BE PROTECTED BY A MINIMUM OF FIVE YEAR GUARANTEE STARTING FROM THE DATE OF ACCEPTANCE OF THE INSTALLED FIXTURES, AGAINST DEFECTS IN WORKMANSHIP WHICH INCLUDES AN IN-WARRANTY SERVICE PROGRAM PROVIDING FOR THE PAYMENT OF AUTHORIZED LABOR CHARGES INCURRED IN THE REPLACEMENT OF INOPERATIVE OR DEFECTIVE IN-WARRANTY DRIVERS.

R. RECESSED FIXTURES SHALL BE FURNISHED COMPLETE WITH MOUNTING DEVICES AND ACCESSORIES. WHERE NECESSARY TO MEET CODE REQUIREMENTS, ENCLOSURE HOUSING SHALL BE SUITABLE FOR A 1 HOUR FIRE RATING. ATTACHMENT DEVICES INCLUDING BRACKETS, PLASTER RINGS, SADDLE HANGERS AND TIE-BARS SHALL BE MADE OF FORMED OR ROLLED METAL SHAPES WITH THE REQUISITE RIGIDITY AND STRENGTH TO MAINTAIN CONTINUOUS ALIGNMENT OF THE INSTALLED FIXTURES.

S. FIXTURES SHALL BE ATTACHED TO STRUCTURAL CEILING MEMBERS, AND SHALL NOT DEPEND UPON LATHING OR PLASTER FOR ALIGNMENT OR SUPPORT. FIXTURES IN SUSPENDED CEILINGS SHALL BE SUPPORTED BY FOUR WIRES, ONE FROM EACH CORNER TO STRUCTURE, AND SHALL BE SUPPORTED BY SADDLE HANGERS OR TIE-BARS ATTACHED TO RUNNERS OR BETWEEN CROSSBARS OF CEILING SYSTEMS. MOUNTING SPLINES OR OTHER POSITIVE MEANS OF MAINTAINING ALIGNMENT AND RIGIDITY SHALL BE PROVIDED. SUPPORTING MEMBERS SHALL BE SURFACE PASSIVATED, AND BE PRIMED OR PAINT DIPPED TO RESIST CORROSION. FASTENING DEVICES SHALL BE OF A POSITIVE LOCKING TYPE, AND SHALL NOT REQUIRE THE USE OF SPECIAL TOOLS TO REMOVE. TIE WIRES SHALL NOT BE USED IN PLACE OF FASTENING DEVICES.

24. TELEPHONE AND COMMUNICATIONS SYSTEMS

A. CONTRACTOR SHALL INSTALL ALL EMPTY CONDUITS AS REQUIRED BY THE TELEPHONE COMPANY AND COMMUNICATIONS SYSTEM AND AS SHOWN IN ELECTRICAL DRAWINGS. PROVIDE A STEEL CORE NYLON ROPE DRAG LINE WITH TERMINAL BALL IN ALL EMPTY CONDUITS OVER 10' LONG.

25. INTERLOCKS

A. ALL INTERLOCK WIRING SHALL BE PROVIDED UNDER THE MECHANICAL CONTRACT, INCLUDING ALL POWER TO AUTOMATIC DAMPERS, VALVES AND ANY OTHER CONTROL EQUIPMENT SUPPORTING THE MECHANICAL SYSTEM.

26. FINAL CLEANUP AND FIELD TESTS

AFTER COMPLETION OF THE ENTIRE ELECTRICAL INSTALLATION:

A. THE CONTRACTOR, BEFORE FINAL ACCEPTANCE WILL BE GRANTED, SHALL CLEAN ALL LIGHTING FIXTURES, DEVICE PLATES, SERVICE FITTINGS AND OTHER ITEMS FURNISHED UNDER THIS CONTRACT AND SHALL ENSURE THAT ALL DIRECTORIES ARE IN PLACE WITH COMPLETED OR REVISED SCHEDULES AND ALL IDENTIFICATIONS AND MARKINGS OF EQUIPMENT, CABLES AND OTHER ITEMS, ARE COMPLETED.

B. THE CONTRACTOR SHALL REPAIR OR REPLACE, AS DIRECTED BY THE ENGINEER, AT NO ADDITIONAL COST TO THE OWNER, ANY ITEM DAMAGED DUE TO INSTALLATION, RELOCATION OR REINSTALLATION.

C. IN ADDITION TO OTHER TESTS WHICH MAY BE REQUIRED IN THE VARIOUS OTHER DISCIPLINES, PERFORM FIELD TESTS IN THE PRESENCE OF THE ENGINEER TO DEMONSTRATE THE RELIABILITY OF THE ELECTRICAL INSTALLATION. PROVIDE THE ENGINEER WITH 48 HOURS ADVANCE NOTICE OF SUCH TESTS. AS A MINIMUM, THE FOLLOWING FIELD TESTS SHALL BE PERFORMED BY THE CONTRACTOR:

1. OPERATE ALL ELECTRICAL EQUIPMENT FOR A PERIOD OF 24 HOURS, UNLESS OTHERWISE DIRECTED BY THE ENGINEER.
2. TEST ALL WIRES AND CABLES INSTALLED UNDER THIS CONTRACT WITH A 1, 000 VOLT MEGOHMETER PHASE TO PHASE AND PHASE TO GROUND. FURNISH THE ENGINEER WITH A COPY OF THE RESULTS TOGETHER WITH AN OUTLINE OF THE METHOD USES. IF IN THE OPINION OF THE ENGINEER, ANY READINGS ARE LOWER THAN REQUIRED BY GOOD PRACTICE OR APPLICABLE CODES, PROMPTLY REPLACE THE MATERIALS OR EQUIPMENT INVOLVED.
3. COMPLETE SYSTEM TEST OF ALARM, SECURITY AND CONTROL SYSTEMS IN THE PRESENCE OF ALL APPROPRIATE PARTIES. SHOULD THE FOREGOING TESTS REVEAL ANY DEFECTS, PROMPTLY CORRECT SUCH DEFECTS AND RE-RUN THE TESTS UNTIL THE ENTIRE INSTALLATION IS SATISFACTORY IN ALL RESPECTS.

27. RECORD DRAWINGS

A. AS PART OF THESE REQUIREMENTS A COMPLETE SET OF "AS-BUILT" OR RECORD DRAWINGS SHALL BE PRODUCED AND DELIVERED TO TRILLIUM.

B. THE DRAWINGS SHALL SHOW:

1. ALL ELECTRICAL WORK INSTALLED.
2. ALL MODIFICATIONS AND/OR ADDITIONS TO THE ORIGINAL DESIGN.
3. ALL DIMENSIONAL INFORMATION NECESSARY TO LOCATE BURIED OR CONCEALED CONDUIT WORK WHICH CANNOT BE TRACED THROUGH REGULAR MEANS OF ACCESS.

28. GUARANTEE

A. THE CONTRACTOR SHALL GUARANTEE ALL WORK AND MATERIALS FOR A PERIOD OF ONE YEAR FROM THE ACCEPTANCE OF THE PROJECT AGAINST DEFECTIVE MATERIALS OR WORKMANSHIP.

i:\2016\2016-235-gunnisonco\001-cngstation\H-Dwgs\Mep\Working\GunnisonCNG-Elec.dwg Plotted: 4/13/2017 8:46 AM By: Ty Costello

COLORADO LICENSED PROFESSIONAL ENGINEER JEFF M. GREBE 26072

SGM
118 West Sixth Street, Suite 200
Glenwood Springs, CO 81601
970.945.1004 www.sgm-inc.com

Gunnison County
CNG Fill Station / 508 Tomichi Ave,
Gunnison CO

#	Revision	Date	By
1	Trillium Final Review #1	04/12/2017	

Notes

Job No.	2016-235.001
Drawn by:	TC
Date:	02/16/2017
QC: JG	PE: JG
File:	GunnisonCNG-Elec

SITE COORDINATION

THE LOCATION, CAPACITY, AND VOLTAGE OF THE LINES ARE ALL IN ACCORDANCE WITH DATA GIVEN THIS OFFICE BY THE UTILITY COMPANY. COORDINATE WITH THE LOCAL UTILITY COMPANY THE INSTALLATION OF THE ELECTRICAL SERVICE. COMPLY WITH UTILITY REGULATIONS. REPORT DISCREPANCIES TO THE ENGINEER.

ELECTRIC UTILITY

UTILITY

PERSON CONTACTED:
DATE:
PHONE NUMBER:

CODES

1. NATIONAL ELECTRICAL CODE
2. NATIONAL FIRE PROTECTION ASSOCIATION (NFPA).
   A) NFPA 52, 2010 EDITION : COMPRESSED NATURAL GAS (CNG) VEHICULAR FUEL SYSTEMS CODE.
   B) NFPA 70, 2011 EDITION: NATIONAL ELECTRIC CODE AMENDMENTS, AS APPLICABLE.
   C) NFPA 30A, 2012 EDITION: CODE FOR MOTOR FUEL DISPENSING FACILITIES AND REPAIR GARAGES.
   D) NFPA 496: STANDARD FOR PURGED AND PRESSURIZED ENCLOSURES FOR ELECTRICAL EQUIPMENT.
3. INTERNATIONAL BUILDING CODE W/ LOCAL AMENDMENTS.
4. INTERNATIONAL FIRE CODE, WITH LOCAL AMENDMENTS.
   A) IFC 2208.7
5. OCCUPATIONAL SAFETY AND HEALTH ACT (WORK AREA SOUND-LEVEL LIMITS).
6. AMERICAN SOCIETY FOR TESTING AND MATERIALS (ASTM).
7. NATIONAL ELECTRICAL MANUFACTURERS ASSOCIATION (NEMA) NEMA 250 - ENCLOSURES FOR ELECTRICAL EQUIPMENT (1000 VOLTS MAXIMUM).

ABBREVIATIONS

NOTE: ALL ABBREVIATIONS MAY NOT BE USED.

1P	SINGLE POLE
1PH	SINGLE-PHASE
1WAY	ONE-WAY
2/C	TWO-CONDUCTOR
2WAY	TWO-WAY
3/C	THREE-CONDUCTOR
3PH	THREE-PHASE
3WAY	THREE-WAY
4OUT	QUADRUPLE RECEPTACLE OUTLET
4PDT	FOUR-POLE DOUBLE THROW
4PST	FOUR-POLE SINGLE THROW
4W	FOUR-WIRE
4WAY	FOUR-WAY
A	ABOVE COUNTER
AC	ARMORED CABLE
ADA	AMERICANS WITH DISABILITIES ACT
ADJ	ADJACENT
AFF	ABOVE FINISHED FLOOR
AFG	ABOVE FINISHED GRADE
AIC	AMPERE INTERRUPTING CAPACITY
ALUM	ALUMINUM
AMP	AMPERE
ANN	ANNUNCIATOR
AP	ACCESS POINT (WIRELESS DATA)
AR	AS REQUIRED
ASC	AMPS SHORT CIRCUIT
ATS	AUTOMATIC TRANSFER SWITCH
AV	AUDIO VISUAL
AWG	AMERICAN WIRE GAGE
BB XFMR	BUCK-BOOST TRANSFORMER
C	CEILING MOUNTED
CATV	COMMUNITY ANTENNA TELEVISION
CB	CIRCUIT BREAKER
CCBA	CUSTOM COLOR AS SELECTED BY ARCHITECT
CCTV	CLOSED CIRCUIT TELEVISION
CFBA	CUSTOM FINISH AS SELECTED BY ARCHITECT
CF/CI	CONTRACTOR FURNISHED/ CONTRACTOR INSTALLED
CF/OI	CONTRACTOR FURNISHED/ OWNER INSTALLED
CKT	CIRCUIT
CM	CONSTRUCTION MANAGER
CND	CONDUIT
CO	CONVENIENCE OUTLET
COR	CONTRACTING OFFICER'S REPRESENTATIVE
CP	CONTROL PANEL
CT	CURRENT TRANSFORMER
CTV	CABLE TELEVISION
CU	COPPER
dBA	UNIT OF SOUND LEVEL
DPDT	DOUBLE POLE DOUBLE THROW
DS	DISCONNECT SWITCH
EA	EACH
EM	EMERGENCY
EMT	ELECTRICAL METALLIC TUBING
ENT	ELECTRICAL NONMETALLIC TUBING
EPO	EMERGENCY POWER OFF
EQUIP	EQUIPMENT
EXIST	EXISTING
F	FURNITURE MOUNTED
FA	FIRE ALARM
FCP	FIRE ALARM CONTROL PANEL
FLA	FULL LOAD AMPS
FMC	FLEXIBLE METAL CONDUIT
FOB	FREIGHT ON BOARD
FVNR	FULL VOLTAGE NON-REVERSING
FVR	FULL VOLTAGE REVERSING
G	GROUND
GEN	GENERATOR
GFCI	GROUND FAULT CIRCUIT INTERRUPTER
GFP	GROUND FAULT PROTECTION
HD	HEAVY DUTY
HID	HIGH INTENSITY DISCHARGE
HOA	HAND-OFF-AUTOMATIC
HP	HORSE POWER
HPF	HIGH POWER FACTOR
HPS	HIGH PRESSURE SODIUM
HV	HIGH VOLTAGE
HZ	HERTZ
IG	ISOLATED GROUND
IMC	INTERMEDIATE METAL CONDUIT
IN/IS	INSULATED/ISOLATED
I/O	INPUT/OUTPUT
IR	INFRARED
J-BOX	JUNCTION BOX
KV	KILOVOLT

KVA	KILOVOLT AMPERE
kVAR	KILOVOLT AMPERE REACTIVE
kW	KILOWATT
kWh	KILOWATT HOUR
LED	LIGHT EMITTING DIODE
LFMC	LIQUID TIGHT FLEXIBLE METAL CONDUIT
LFNC	LIQUID TIGHT FLEXIBLE NONMETALLIC CONDUIT
LPS	LOW PRESSURE SODIUM
LRA	LOCKED ROTOR AMPS
LTG	LIGHTING
LV	LOW VOLTAGE
MATV	MASTER ANTENNA TELEVISION SYSTEM
MAX	MAXIMUM
MC	METAL CLAD
MCA	MINIMUM CIRCUIT AMPS
MCB	MAIN CIRCUIT BREAKER
MCC	MOTOR CONTROL CENTER
MCP	MOTOR CIRCUIT PROTECTION
MDP	MAIN DISTRIBUTION PANEL
MG	MOTOR GENERATOR
MH	MANHOLE
MIN	MINIMUM
MLO	MAIN LUGS ONLY
MOCP	MAXIMUM OVERCURRENT PROTECTION
NA	NOT APPLICABLE
NC	NORMALLY CLOSED
NEC	NATIONAL ELECTRICAL CODE
NEMA	NATIONAL ELECTRICAL MANUFACTURERS ASSOCIATION
NFC	NATIONAL FIRE CODE
NFPA	NATIONAL FIRE PROTECTION ASSOCIATION
NIC	NOT IN CONTRACT
NL	NIGHT LIGHT
NO	NORMALLY OPEN
NTS	NOT TO SCALE
OC	ON CENTER
OCP	OVER CURRENT PROTECTION
OF/CI	OWNER FURNISHED/ CONTRACTOR INSTALLED
OF/OI	OWNER FURNISHED/ OWNER INSTALLED
OFP	OBTAIN FROM PLANS
OH DR	OVERHEAD (COILING) DOOR
OL	OVERLOAD
PB	PUSHBUTTON
PF	POWER FACTOR
PH	PHASE
PNL	PANEL
PT	POTENTIAL TRANSFORMER
PTZ	PAN/TILT/ZOOM
QTY	QUANTITY
R	REMOVE
RCP	REFLECTED CEILING PLAN
RMC	RIGID METAL CONDUIT
RNC	RIGID NONMETALLIC CONDUIT
RPM	REVOLUTIONS PER MINUTE
RR	REMOVE AND RELOCATE
RVNR	REDUCED VOLTAGE NON REVERSING
SCA	SHORT CIRCUIT AMPS
SCBA	STANDARD COLOR AS SELECTED BY ARCHITECT
SF	SQUARE FOOT (FEET)
SFBA	STANDARD FINISH AS SELECTED BY ARCHITECT
SPDT	SINGLE POLE, DOUBLE THROW
SPEC	SPECIFICATION
SPST	SINGLE POLE, SINGLE THROW
S/S	START/STOP
ST	SINGLE THROW
SWBD	SWITCHBOARD
SWGR	SWITCHGEAR
T	PROVIDED BY TRILLIUM
TL	TWIST LOCK
TP	TELEPHONE POLE
TP	TWISTED PAIR
TTB	TELEPHONE TERMINAL BOARD
TV	TELEVISION
TVSS	TRANSIENT VOLTAGE SURGE SUPPRESSER
TYP	TYPICAL
UF	UNDER FLOOR
UGND	UNDERGROUND
UPS	UNINTERRUPTIBLE POWER SUPPLY
V	VOLTS
VA	VOLT AMPERE
VFC	VARIABLE FREQUENCY CONTROLLER
W/	WITH
W/O	WITHOUT
WP	WEATHERPROOF
XFMR	TRANSFORMER

DEFINITIONS

NOTE: ALL DEFINITIONS MAY NOT BE USED.

INDICATED: THE TERM "INDICATED" REFERS TO GRAPHIC REPRESENTATIONS, NOTES, OR SCHEDULES ON THE DRAWINGS, OTHER PARAGRAPHS OR SCHEDULES IN THE SPECIFICATIONS, AND SIMILAR REQUIREMENTS IN THE CONTRACT DOCUMENTS. WHERE TERMS SUCH AS "SHOWN", "NOTED", "SCHEDULED", AND "SPECIFIED" ARE USED, IT IS TO HELP THE READER LOCATE THE REFERENCE, NO LIMITATION ON LOCATION IS INTENDED.

DIRECTED: TERMS SUCH AS "DIRECTED", "REQUESTED", AUTHORIZED", "SELECTED", "APPROVED", "REQUIRED", AND "PERMITTED" MEAN "DIRECTED BY THE ENGINEER", "REQUESTED BY THE ENGINEER", AND SIMILAR PHRASES.

APPROVED: THE TERM "APPROVED", WHERE USED IN CONJUNCTION WITH THE ENGINEER'S ACTION ON THE CONTRACTOR'S SUBMITTALS, APPLICATIONS, AND REQUESTS, IS LIMITED TO THE ENGINEER'S DUTIES AND RESPONSIBILITIES AS STATED IN GENERAL AND SUPPLEMENTARY CONDITIONS.

FURNISH: THE TERM "FURNISH" IS USED TO MEAN "SUPPLY AND DELIVER TO THE PROJECT SITE, READY FOR UNLOADING, UNPACKING, ASSEMBLY, INSTALLATION, AND SIMILAR OPERATIONS."

INSTALL: THE TERM "INSTALL" IS USED TO DESCRIBE OPERATIONS AT PROJECT SITE INCLUDING THE ACTUAL "UNLOADING, UNPACKING, ASSEMBLY, ERECTION, PLACING, ANCHORING, APPLYING, WORKING TO DIMENSION, FINISHING, CURING, PROTECTING, CLEANING, AND SIMILAR OPERATIONS."

PROVIDE: THE TERM "PROVIDE" MEANS "TO FURNISH AND INSTALL, COMPLETE AND READY FOR THE INTENDED USE."

INSTALLER: AN "INSTALLER" IS THE CONTRACTOR OR AN ENTITY ENGAGED BY THE CONTRACTOR, EITHER AS AN EMPLOYEE, SUBCONTRACTOR, OR SUB-SUBCONTRACTOR, FOR PERFORMANCE OF A PARTICULAR CONSTRUCTION ACTIVITY, INCLUDING INSTALLATION, ERECTION, APPLICATION, AND SIMILAR OPERATIONS. INSTALLERS ARE REQUIRED TO BE EXPERIENCED IN THE OPERATIONS THEY ARE ENGAGED TO PERFORM.

TECHNOLOGY SYSTEMS: THE TERM "TECHNOLOGY SYSTEMS" IS USED TO DESCRIBE ALL LOW VOLTAGE SYSTEMS GENERALLY REFERRED TO AS "SPECIAL SYSTEMS". THESE SYSTEMS INCLUDE BUT ARE NOT NECESSARILY LIMITED TO ALL SYSTEMS WHICH UTILIZE VOLTAGES OF LESS THAN 71 VOLTS SUCH AS SOUND SYSTEMS, VIDEO SYSTEMS, TV SYSTEMS, SECURITY SYSTEMS, VOICE AND DATA CABLING SYSTEMS, ETC...

VOLTAGE DROP TABLES

1. MULTI-WIRE BRANCH CIRCUITS: INSTALL NO MORE THAN THREE UNITS IN RACEWAY, UNLESS SPECIFICALLY SHOWN OTHERWISE.

A. FOR 120V MULTI-WIRE BRANCH CIRCUITS, PROVIDE SHARED NEUTRAL CONDUCTOR THAT IS ONE SIZE LARGER THAN THE PHASE CONDUCTORS.

1. MINIMUM BRANCH CIRCUIT CONDUCTOR SIZE: PROVIDE THE FOLLOWING MINIMUM SIZES FOR DISTANCES LISTED ON 20A BRANCH CIRCUITS TO PREVENT EXCESSIVE VOLTAGE DROP. THE CIRCUIT LENGTH SHALL BE MEASURED ALONG THE LENGTH OF THE CONDUCTOR FORM THE CIRCUIT BREAKER IN THE PANEL BOARD TO THE LAST DEVICE ON THE CIRCUIT. IF REQUIRED, INCREASE RACEWAY SIZE TO COMPLY WITH CONDUCTOR FILL REQUIREMENTS OF NFPA 70.

A. BRANCH CIRCUIT VOLTAGE OF 120V:

1. CIRCUIT LENGTHS LESS THAN 70 FEET: PROVIDE MINIMUM #12 AWG CONDUCTOR SIZE.

2. CIRCUIT LENGTHS BETWEEN 70 FEET AND 110 FEET: PROVIDE MINIMUM #10 AWG CONDUCTOR SIZE.

3. CIRCUIT LENGTHS BETWEEN 110 FEET AND 170 FEET: PROVIDE MINIMUM #8 AWG CONDUCTOR SIZE.

4. CIRCUIT LENGTHS GREATER THAN 170 FEET: PERFORM VOLTAGE DROP CALCULATIONS AND PROVIDE CONDUCTOR SIZE TO KEEP BRANCH CIRCUIT VOLTAGE DROP LESS THAN 3% WITH A 15 AMP LOAD.

B. BRANCH CIRCUIT VOLTAGE OF 277V:

1. CIRCUIT LENGTHS LESS THAN 150 FEET: PROVIDE MINIMUM #12 AWG CONDUCTOR SIZE.

2. CIRCUIT LENGTHS BETWEEN 150 FEET AND 240 FEET: PROVIDE MINIMUM #10 AWG CONDUCTOR SIZE.

3. CIRCUIT LENGTHS BETWEEN 240 FEET AND 380 FEET: PROVIDE MINIMUM #8 AWG CONDUCTOR SIZE.

4. CIRCUIT LENGTHS GREATER THAN 380 FEET: PERFORM VOLTAGE DROP CALCULATIONS AND PROVIDE CONDUCTOR SIZE TO KEEP BRANCH CIRCUIT VOLTAGE DROP LESS THAN 3% WITH A 15 AMP LOAD.

i:\2016\2016-235-gunnisonco\001-cngstation\H-Dwgs\Mep\Working\GunnisonCNG-Elec.dwg Plotted: 4/13/2017 8:46 AM By: Ty Costello

SGM
118 West Sixth Street, Suite 200
Glenwood Springs, CO 81601
970.945.1004 www.sgm-inc.com

Gunnison County
CNG Fill Station / 508 Tomichi Ave,
Gunnison CO

#	Revision	Date	By
1	Trillium Final Review #1	04/12/2017	

Notes

Job No.	2016-235.001
Drawn by:	TC
Date:	02/16/2017
QC: JG	PE: JG
File:	GunnisonCNG-Elec

E-16 Of 34

SYMBOL LEGEND

SYMBOL	DESCRIPTION
REFERENCE AND LINE SYMBOLS	
A5 / E-501	DETAIL INDICATOR: A5 INDICATES DETAIL NUMBER, E-501 INDICATES DRAWING SHEET WHERE DETAIL IS SHOWN.
A5 / E-201	ELEVATION OR SECTION INDICATOR, EXTERIOR: A5 INDICATES ELEVATION OR SECTION NUMBER, E-201 INDICATES DRAWING SHEET WHERE ELEVATION OR SECTION IS SHOWN.
A5 / E-201	ELEVATION OR SECTION INDICATOR, INTERIOR: A5 INDICATES ELEVATION OR SECTION NUMBER, E-201 INDICATES DRAWING SHEET WHERE ELEVATION OR SECTION IS SHOWN.
1	KEYNOTE INDICATOR.
1	REVISION INDICATOR.
CU-1	EQUIPMENT INDICATOR.
	BREAK, STRAIGHT: TO BREAK PARTS OF DRAWING.
	BREAK, ROUND.
MATCH LINE SEE XX/X-XXX	MATCH LINE INDICATOR: CENTER, EXTRA WIDE LINE.
	NEW LINE: MEDIUM LINE.
	HIDDEN FEATURES LINE: HIDDEN, THIN LINE.
	EXISTING TO REMAIN LINE: THIN LINE.
	DEMOLITION LINE: DASHED, MEDIUM LINE.
	PROPERTY LINE: DASHED, WIDE LINE.
	CONTRACT LIMIT LINE: DASHDOT, WIDE LINE.
WIRING METHODS	
	WIRING.
	WIRING TURNED UP OR TOWARDS OBSERVER.
	WIRING TURNED DOWN OR AWAY FROM OBSERVER.
A-1,3,5	BRANCH CIRCUIT HOME RUN TO PANELBOARD: NUMBER OF ARROWS INDICATES NUMBER OF CIRCUITS. LETTER AND NUMBER NOTATIONS IDENTIFY PANEL AND CIRCUIT NUMBERS. USE #12 CONDUCTORS, EXCEPT #10 CONDUCTORS SHALL BE INSTALLED IF DISTANCES EXCEEDS 200 FEET.
1 A-1,3,5	BRANCH CIRCUIT HOME RUN TO PANELBOARD: NUMBER OF ARROWS INDICATES NUMBER OF CIRCUITS. LETTER AND NUMBER NOTATIONS IDENTIFY PANEL AND CIRCUIT NUMBERS. NUMBER IN BOX REFERS TO THE CONDUCTOR AND CONDUIT SCHEDULE. FOR BRANCH WIRING USE #12 CONDUCTORS, EXCEPT #10 CONDUCTORS SHALL BE INSTALLED IF DISTANCES EXCEEDS 200 FEET..
	FLEXIBLE WIRING.
— X —	WIRING AND/OR RACEWAY: THIN LINE. WHERE "X" = : CCTV = CLOSED CIRCUIT TELEVISION FA = FIRE ALARM FO = FIBER OPTICS I = INTERCOM P = POWER RC = RIGID CONDUIT S = SOUND T = TELEPHONE TV = TELEVISION OTHERS AS NOTED IN OTHER SCHEDULES. RACEWAYS AND WIRING SHALL BE SIZED AS SHOWN AND/OR SPECIFIED.
	LOW VOLTAGE WIRING: DIVIDE, MEDIUM LINE.
	CONDUIT STUB. DIMENSION RECORD DRAWINGS AND MARK.
1	CONDUCTOR & CONDUIT ("CC") SCHEDULE INDICATOR. REFER TO ONE-LINE DIAGRAM.
1	CONDUCTOR RUN IDENTIFICATION.
J	JUNCTION BOX.
PB	PULL BOX.
C C	CABLE TRAY.
W W	WIREWAY.
	EARTH GROUND (ONE-LINE DIAGRAM).
J C	JUNCTION BOX, CEILING.
WIRING DEVICES	
	RECEPTACLE, SINGLE: NEMA 5-20R.
	RECEPTACLE, DUPLEX: NEMA 5-20R.

SYMBOL LEGEND

SYMBOL	DESCRIPTION
A	RECEPTACLE, DUPLEX, ABOVE COUNTER: NEMA 5-20R.
C	RECEPTACLE, DUPLEX, CEILING: NEMA 5-20R.
D	RECEPTACLE, DUPLEX, DEDICATED CIRCUIT: NEMA 5-20R.
IG	RECEPTACLE, DUPLEX, ISOLATED GROUND: NEMA 5-20R.
S	RECEPTACLE, DUPLEX, SWITCHED: NEMA 5-20R.
W	RECEPTACLE, DUPLEX WITH GROUND FAULT CIRCUIT INTERRUPTER, WET LABEL, "WEATHERPROOF IN USE": NEMA 5-20R.
WP	RECEPTACLE, DUPLEX WITH GROUND FAULT CIRCUIT INTERRUPTER, WEATHERPROOF: NEMA 5-20R.
	RECEPTACLE, DUPLEX ON EMERGENCY POWER: NEMA 5-20R.
	RECEPTACLE, DUPLEX, CONNECTED TO UPS: NEMA 5-20R.
	RECEPTACLE, DUPLEX WITH GROUND FAULT CIRCUIT INTERRUPTER: NEMA 5-20R.
	RECEPTACLE, DUPLEX WITH GROUND FAULT CIRCUIT INTERRUPTER, HOSPITAL GRADE: NEMA 5-20R.
WP	RECEPTACLE, DUPLEX WITH GROUND FAULT CIRCUIT INTERRUPTER, WEATHERPROOF: NEMA 5-20R.
	RECEPTACLE, QUADRAPLEX: NEMA 5-20R.
	RECEPTACLE, QUADRAPLEX ON EMERGENCY POWER: NEMA 5-20R.
	RECEPTACLE, QUADRAPLEX, CONNECTED TO UPS: NEMA 5-20R.
	RECEPTACLE, QUADRAPLEX WITH GROUND FAULT CIRCUIT INTERRUPTER: NEMA 5-20R.
	RECEPTACLE, SPECIAL PURPOSE. PROVIDE RECEPTACLE TO MATCH EQUIPMENT PLUG.
	RECEPTACLE, SPECIAL PURPOSE ON EMERGENCY POWER. PROVIDE RECEPTACLE TO MATCH EQUIPMENT PLUG.
D	RECEPTACLE, DRYER: NEMA 10-30R.
R	RECEPTACLE, RANGE: NEMA 10-50R.
	MULTI-OUTLET ASSEMBLY: NEMA 5-20R.
D	DROP CORD. SEE DETAIL.
X $	SWITCH, SINGLE POLE ("x" INDICATES FIXTURES CONTROLLED).
X $2	SWITCH, DOUBLE POLE ("x" INDICATES FIXTURES CONTROLLED).
X $3	SWITCH, THREE-WAY ("x" INDICATES FIXTURES CONTROLLED).
X $4	SWITCH, FOUR-WAY ("x" INDICATES FIXTURES CONTROLLED).
$DS	SWITCH, DOOR.
$K	SWITCH, KEY OPERATED.
$LM	SWITCH, LOW VOLTAGE MASTER.
$M	SWITCH, MOMENTARY.
$P	SWITCH, PILOT LIGHT.
$T	SWITCH, TIMER OPERATED.
$WP	SWITCH, WEATHERPROOF.
T	RECEPTACLE, DUPLEX, TAMPER RESISTANT: NEMA 5-20R.
	RECEPTACLE, DUPLEX WITH GROUND FAULT CIRCUIT INTERRUPTER, CONNECTED TO UPS: NEMA 5-20R.
ELECTRICAL POWER AND DISTRIBUTION	
	FUSE WITH RATING (ONE-LINE DIAGRAM).
	DISCONNECT, FUSED (ONE-LINE DIAGRAM).
	DISCONNECT, NONFUSED (ONE-LINE DIAGRAM).
MCP	MOTOR CIRCUIT PROTECTOR (MCP) COMBINATION MOTOR STARTER.
G	GREEN LIGHT.
R	RED STROBE.
A	AMBER STROBE.
Y	YELLOW BEACON.
M	SIERRA MONITOR METHANE SENSOR.
	CCT CAMERA

SYMBOL LEGEND

SYMBOL	DESCRIPTION
MCP	SOLID STATE REDUCED VOLTAGE MOTOR STARTER.
	OVERLOAD RELAY (ONE-LINE DIAGRAM).
	STARTER (ONE-LINE DIAGRAM).
	CIRCUIT BREAKER, MOLDED CASE (ONE-LINE DIAGRAM).
	CIRCUIT BREAKER, MOLDED CASE WITH SHUNT TRIP (ONE-LINE DIAGRAM).
MCP	CIRCUIT BREAKER, MOTOR CIRCUIT PROTECTION (ONE-LINE DIAGRAM).
	CIRCUIT BREAKER, SOLID STATE (ONE-LINE DIAGRAM).
GFP	CIRCUIT BREAKER, SOLID STATE WITH GROUND FAULT PROTECTION (ONE-LINE DIAGRAM).
	MOTOR.
F	EXHAUST FAN OUTLET.
	HEATER, ELECTRIC RESISTANCE.
	TRANSFORMER (ONE-LINE DIAGRAM).
	TRANSFORMER, CURRENT (ONE-LINE DIAGRAM).
	CAPACITOR (ONE-LINE DIAGRAM).
	DELTA CONNECTION (ONE-LINE DIAGRAM).
	WYE CONNECTION (ONE-LINE DIAGRAM).
"1H"	PANELBOARD (ONE-LINE DIAGRAM).
225/3 "1H"	PANELBOARD WITH MAIN LUGS ONLY. BUS SIZE AND PHASE AS SHOWN (ONE-LINE DIAGRAM).
225/3 "1H"	PANELBOARD WITH MAIN CIRCUIT BREAKER. SIZE AND PHASE AS SHOWN (ONE-LINE DIAGRAM).
225/3 "1H" 60/3	PANELBOARD WITH MAIN AND SUB FEED CIRCUIT BREAKER (ONE-LINE DIAGRAM).
225/3 "1H" 25/3	PANELBOARD WITH MAIN LUGS ONLY AND SURGE PROTECTION WITH CIRCUIT BREAKER (ONE-LINE DIAGRAM).
	CONNECTION TO THE GROUND CIRCUIT CONDUCTOR (NEUTRAL)
225/3 "1H" 225/3 "1H"	PANELBOARD WITH SUB FEED LUGS (ONE-LINE DIAGRAM).
225/3 "1H" "1H"	PANELBOARD WITH CIRCUIT BREAKER AND SUB FEED LUGS (ONE-LINE DIAGRAM).
	TRANSITION CABINET (ONE-LINE DIAGRAM).

SYMBOL LEGEND

SYMBOL	DESCRIPTION
	CT CABINET PER UTILITY'S REQUIREMENTS (ONE-LINE DIAGRAM).
	TRANSFER SWITCH (ONE-LINE DIAGRAM).
DMM	DIGITAL MULTIMETER (ONE-LINE DIAGRAM).
	SERVICE ENTRANCE SURGE PROTECTION (ONE-LINE DIAGRAM).
G	GENERATOR, ANNUNCIATOR (ONE-LINE DIAGRAM).
G	GENERATOR, POWER (ONE-LINE DIAGRAM).
M	METER.
VFC	VARIABLE FREQUENCY CONTROLLER (ONE-LINE DIAGRAM).
	DIODE (ONE-LINE DIAGRAM).
	AERIAL SERVICE WEATHER HEAD (ONE-LINE DIAGRAM).
	DISCONNECT SWITCH, FUSED.
	DISCONNECT SWITCH, NONFUSED.
	STARTER, COMBINATION WITH DISCONNECT SWITCH.
	STARTER OR MOTOR CONTROLLER.
	PUSHBUTTON.
	PUSHBUTTONS, MOTOR CONTROL.
	PANELBOARD CABINET, FLUSH MOUNTED.
	PANELBOARD CABINET, SURFACE MOUNTED, 1 SECTION.
	PANELBOARD CABINET, SURFACE MOUNTED, 2 SECTION.
DP#__	DISTRIBUTION PANEL OR SWITCHBOARD.
LP	LIGHTING RELAY, CONTACTOR PANEL, OR DIMMING ENCLOSURE.
	CENTRAL PROCESSOR UNIT.
$ST	SWITCH, TOGGLE MOTOR STARTER WITH OVERLOAD PROTECTION.
75	TRANSFORMER: NUMBER INDICATES kVA.
	CIRCUIT BREAKER, DRAW OUT (ONE-LINE DIAGRAM).
LIGHTING (REFER TO FIXTURE SCHEDULE FOR SYMBOLS)	
(W-3)	FIXTURE IDENTIFICATION: (W-3) INDICATES FIXTURE TYPE AS SCHEDULED.
(W-3)	FIXTURE IDENTIFICATION, EMERGENCY WITH BATTERY PACK, CONNECTED TO GENERATOR AS INDICATED: (W-3) INDICATES FIXTURE TYPE AS SCHEDULED.
EM	EMERGENCY.
NL	NIGHT LIGHT: DO NOT SWITCH.
↑	EGRESS DIRECTION ARROW.
LV	LOW VOLTAGE LIGHTING TRANSFORMER.
	GROUND CONNECTION
LIGHTING CONTROL	
*	OCCUPANCY SENSOR, DUAL TECHNOLOGY, CEILING.
*	OCCUPANCY SENSOR, DUAL TECHNOLOGY, WALL.
*U	OCCUPANCY SENSOR, ULTRASONIC, CEILING.
R	OCCUPANCY SENSOR CONTROL RELAY.
P	PHOTOCELL SENSOR, DIRECTIONAL.
SPECIALITY EQUIPMENT	
	CNG DISPENSER PURGE BLOWER

SYMBOL LEGEND

SYMBOL	DESCRIPTION
STRUCTURED CABLING	
X	TELEPHONE, WALL MOUNTED ("X" INDICATES QUANTITY OF CABLES).
P	TELEPHONE, WALL MOUNTED: PAY PHONE.
W	TELEPHONE, WALL MOUNTED: WALL PHONE.
X	OUTLET, DATA COMMUNICATION ("X" INDICATES QUANTITY OF CABLES).
	OUTLET, BUILDING STANDARD COMBINATION TELEPHONE/ DATA COMMUNICATION.
	TELEPHONE TERMINAL BOARD, FIRE TREATED PLYWOOD PAINTED.

MISCELLANEOUS

SYMBOL LEGEND

SYMBOL	DESCRIPTION
	CONDUIT SEAL OFF (ONE LINE DIAGRAM)
	PHOTO CELL

COLORADO LICENSED
26072
PROFESSIONAL ENGINEER

SGM
118 West Sixth Street, Suite 200
Glenwood Springs, CO 81601
970.945.1004 www.sgm-inc.com

Gunnison County
CNG Fill Station / 508 Tomichi Ave,
Gunnison CO

#	Revision	Date	By
1	Trillium Final Review #1	04/12/2017	

Legend

Job No.	2016-235.001
Drawn by:	TC
Date:	02/16/2017
QC: JG	PE: JG
File:	GunnisonCNG-Elec

E-17

Of 34

I:\2016\2016-235-gunnisonco\001-cngstation\In-Dwgs\Mep\Working\GunnisonCNG-Elec.dwg Plotted: 4/13/2017 8:46 AM By: Tj Castello

GENERAL NOTES

ELECTRICAL DRAWINGS ARE DIAGRAMMATIC, SIZES AND LOCATION OF EQUIPMENT AND WIRING ARE SHOWN TO SCALE WHERE POSSIBLE, BUT MAY BE DISTORTED FOR CLARITY ON THE DRAWINGS. FINAL LOCATION OF OUTLETS AND EQUIPMENT SHALL BE AS APPROVED BY THE ENGINEER OR HIS REPRESENTATIVE. IT IS NOT WITHIN THE SCOPE OF DRAWINGS TO SHOW ALL NECESSARY BENDS, OFFSETS, PULL BOXES AND OBSTRUCTIONS. IT SHALL BE THE RESPONSIBILITY OF THE CONTRACTOR TO INSTALL HIS WORK TO CONFORM TO THE STRUCTURE, PRESERVE HEADROOM AND KEEP OPENINGS AND PASSAGEWAYS CLEAN.

1. BIDDERS, BEFORE SUBMITTING A PROPOSAL, SHALL VISIT AND CAREFULLY EXAMINE THE AREAS AFFECTED BY THIS WORK TO BECOME FAMILIAR WITH EXISTING CONDITIONS AND WITH THE DIFFICULTIES THAT WILL ATTEND THE EXECUTION OF THIS WORK. SUBMISSION OF A PROPOSAL WILL BE CONSTRUED AS EVIDENCE THAT SUCH AN EXAMINATION HAS BEEN MADE. LATER CLAIMS WILL NOT BE RECOGNIZED FOR EXTRA LABOR, EQUIPMENT OR MATERIALS REQUIRED BECAUSE OF DIFFICULTIES ENCOUNTERED WHICH COULD HAVE BEEN FORESEEN HAD SUCH EXAMINATION BEEN MADE.

2. BIDS SHALL INCLUDE ALL POWER, GROUNDING AND EMPTY CONDUIT REQUIREMENTS NECESSARY FOR THE COMPLETE ELECTRICAL INSTALLATION.

3. FURNISH AND INSTALL WIRING FOR EQUIPMENT FURNISHED BY OTHERS, AS SHOWN ON MECHANICAL, HVAC, PLUMBING AND/OR ELECTRICAL DRAWINGS. COORDINATE WITH OTHER TRADES FOR DETAILS OF INSTALLATION AND WIRING REQUIREMENTS. THE TERM "WIRING" AS USED HEREIN SHALL INCLUDE FURNISHING AND INSTALLING CONDUIT, WIRES, JUNCTION/OUTLET BOXES, DISCONNECTS, OVER CURRENT PROTECTION AND FINAL CONNECTIONS. COORDINATE FINAL CONDUCTOR SIZES, QUANTITIES, VOLTAGE REQUIREMENTS, AND OVER CURRENT DEVICE AND OUTLET RATINGS WITH ACTUAL EQUIPMENT TO BE FURNISHED TO THE SITE PRIOR TO FINALIZING WIRING INSTALLATION. MINOR ADJUSTMENTS TO WIRING REQUIREMENTS NECESSARY TO ACCOMMODATE ACTUAL FURNISHED EQUIPMENT SHALL BE PROVIDED AT NO ADDITIONAL COST TO OWNER.

4. THE ELECTRICAL CONTRACTOR SHALL COMPLY WITH THE FOLLOWING CODES AND STANDARDS:

   A. UNDERWRITERS LABORATORIES, INC. (UL).
   B. NATIONAL ELECTRICAL CODE (NEC) NFPA 70.
   C. INTERNATIONAL BUILDING CODE WITH LOCAL AMENDMENTS.
   D. INTERNATIONAL FIRE CODE WITH LOCAL AMENDMENTS.
   E. OCCUPATIONAL SAFETY AND HEALTH ACT (OSHA).
   F. NATIONAL FIRE PROTECTION ASSOCIATION (NFPA).
   G. AMERICAN DISABILITIES ACT (ADA).
   H. BUILDING RULES AND REGULATIONS.
   I. ALL LOCAL JURISDICTION DIRECTIVES AND REQUIREMENTS.

5. THIS CONTRACTOR SHALL DO ALL CUTTING AND PATCHING OF THE EXISTING CONSTRUCTION WHICH MAY BE REQUIRED FOR THE PROPER INSTALLATION OF THE ELECTRICAL WORK. ALL PATCHING SHALL BE OF THE SAME MATERIALS WORKMANSHIP AND FINISH AS, AND SHALL ACCURATELY MATCH, ALL SURROUNDING CONSTRUCTION.

6. VERIFY LOCATIONS OF ALL ELECTRICAL EQUIPMENT. IN CENTERING OUTLETS AND LOCATING BOXES OR OUTLETS, ALLOW FOR OVERHEAD PIPES, DUCTS, MECHANICAL EQUIPMENT, VARIATIONS IN FIREPROOFING AND PLASTERING, WINDOW AND DOOR TRIM, PANELING, HUNG CEILING, ETC., AND CORRECT ANY INACCURACY RESULTING FROM FAILURE TO DO SO WITHOUT EXPENSE TO TRILLIUM.

7. LOCATE JUNCTION AND PULL BOXES TO BE CONCEALED IN FINISH SPACES. WHERE NECESSARY, REROUTE RACEWAYS OR MAKE OTHER ARRANGEMENTS FOR CONCEALMENT. PROVIDE PULL BOXES WHERE NECESSARY FOR WIRE PULLING. COORDINATE ALL BOX LOCATIONS WITH OTHER TRADES. COVERS OF JUNCTION AND PULL BOXES SHALL BE ACCESSIBLE.

8. SECURE ALL SUPPORTS TO BUILDING STRUCTURE AS REQUIRED. SUPPORT HORIZONTAL CONDUIT RUNS AT NO MORE THAN 10' INTERVALS.

10. UPON COMPLETION OF ALL ELECTRICAL WORK, ELECTRICAL CONTRACTOR SHALL ADJUST AND TEST ALL CIRCUITS, OUTLETS, SWITCHES, LIGHTS, MOTORS AND ANY OTHER ELECTRICAL ITEMS INSTALLED. ANY DEFECTIVE ITEMS SHALL BE IMMEDIATELY REPAIRED OR REPLACED WITH NEW EQUIPMENT OR MATERIALS AND THAT PORTION OF THE SYSTEM SHALL BE RETESTED. ALL SUCH REMEDIAL WORK SHALL BE PROVIDED AT NO ADDITIONAL COST TO TRILLIUM. TESTING SHALL BEDONE IN ACCORDANCE WITH THE "ACCEPTANCE TESTING SPECIFICATIONS FOR ELECTRICAL POWER DISTRIBUTION EQUIPMENT AND SYSTEMS" OF THE INTERNATIONAL ELECTRICAL TESTING ASSOCIATION (NETA).

11. UPON COMPLETION OF ALL ELECTRICAL WORK, ELECTRICAL CONTRACTOR SHALL BALANCE ALL PANEL BOARDS AFFECTED TO WITHIN 10% DEVIATION BETWEEN PHASES.

12. AFTER COMPLETION OF WORK, CLEAN UP ALL RESULTANT DEBRIS AND REMOVE FROM THE SITE. DISPOSE OF PROPERLY.

13. ALL ABOVE GROUND CONDUIT SHALL BE THREADED RIGID STEEL (RGS)MINIMUM 3/4", UNLESS OTHERWISE NOTED. FLEXIBLE METAL CONDUIT ("GREENFIELD") MAY BE USED ONLY FOR FINAL CONNECTIONS TO LIGHTING FIXTURES OR VIBRATING EQUIPMENT UNLESS OTHERWISE INDICATED ON DRAWINGS.

14. CONDUCTORS #10 AWG AND SMALLER SHALL BE COPPER, STRANDED, TYPE THHN/THWN; #8 AWG AND LARGER SHALL BE COPPER, STRANDED, TYPE THHN/THWN. ALL WIRING FOR LIGHTING AND POWER SHALL BE #12 AWG MINIMUM.

15. BRANCH CIRCUIT HOME RUN CONDUCTORS SHALL BE INCREASED ONE SIZE (MINIMUM) TO COMPENSATE FOR VOLTAGE DROP FOR 120 VOLT CIRCUITS EXCEEDING 100' FEET AND FOR 277 VOLT CIRCUITS EXCEEDING 150' FEET.

16. ALL PENETRATIONS THROUGH FIRE RATED WALLS OR FLOORS SHALL BE SEALED TO PREVENT THE SPREAD OF SMOKE AND FIRE. THE FIRE RATING OF THE PENETRATION SEALING METHOD SHALL MATCH THE RATING OF THE WALL OR FLOOR. USE A UL MEA/BSA APPROVED SEALING METHOD WHICH IS ACCEPTABLE TO BUILDING MANAGEMENT.

17. ALL HARD WIRING OF FIRE ALARM SYSTEM SHALL BE DONE BY THIS CONTRACTOR AND SHALL MEET BUILDING AND FIRE DEPARTMENT STANDARDS.

18. UPON COMPLETION OF JOB, CONTRACTOR MUST OBTAIN A LETTER OF ACCEPTANCE OF SYSTEM FROM FIRE DEPARTMENT AND SUBMIT TO TRILLIUM'S REPRESENTATIVE.

19. CONTRACTOR SHALL FURNISH ALL NEW CONDUIT, WIRE, BOXES, ETC., AS REQUIRED AND SHALL RECONNECT ALL EXISTING OUTLETS TO REMAIN. ALL DISTURBED ELECTRICAL WORK TO REMAIN, AFTER REMOVAL OF PARTITIONS, CEILINGS, ETC., SHALL BE REROUTED AND RECONNECTED WITH ALL NEW CONDUITS WIRE, BOXES, OUTLETS, ETC., AS REQUIRED. ALL EXISTING WORK TO REMAIN SHALL BE LEFT IN COMPLETE, OPERATING CONDITION.

20. ABANDONED OUTLETS SHALL BE REMOVED COMPLETE WITH ALL WIRING AND CONDUITS. SAME SHALL BE DISCONNECTED, CUT AND DEAD-ENDED IN AN APPROVED MANNER.

21. PROVIDE GFI TYPE PROTECTION FOR ANY RECEPTACLES WITHIN 5' OF WATER OR LIQUIDS.

22. ALL WORK ON BRANCH CIRCUITRY, FEEDERS, RISERS AND EQUIPMENT SHALL BE COMPLETED WITH EQUIPMENT OR CIRCUITS DE-ENERGIZED (SHUT DOWN).

23. FURNISH AND INSTALL INCLUDING LABOR, SUPERVISION, MATERIAL, TOOLS, SERVICES, TRANSPORTATION, OVERHEAD COSTS, FEES, PLAN CHECK FEES, INSPECTION CHARGES, ROYALTIES, PROFIT, ETC., A COMPLETE ELECTRICAL INSTALLATION AS SPECIFIED HEREIN AND INDICATED ON THE ELECTRICAL DRAWINGS IN AN APPROVED, NEAT, FIRST-CLASS, FINISHED, SAFE, WORKMANSHIP LIKE MANNER THAT COMPLIES WITH ALL APPLICABLE LOCAL, STATE, FEDERAL, ETC., CODES, ORDINANCES, RULES, REGULATIONS, STANDARDS, ETC. THE ENTIRE ELECTRICAL INSTALLATION SHALL COMPLY WITH OR SURPASS THE MOST RECENT EDITION OF THE NATIONAL ELECTRICAL CODE AND OCCUPATIONAL SAFETY AND HEALTH ACT (OSHA) STANDARDS.

24. ALL MATERIALS AND EQUIPMENT FURNISHED BY THE ELECTRICAL CONTRACTOR SHALL BE NEW OR FIRST CLASS QUALITY, UNLESS NOTED OTHERWISE, FREE FROM DEFECTS AND CONFORM WITH UNDERWRITERS LABORATORIES, INC. STANDARDS AND BE SO LABELED. MATERIALS, EQUIPMENT, ETC., NOT INDICATED ON DRAWING OR SPECIFIED HEREIN, BUT REQUIRED FOR A SUCCESSFUL AND EFFICIENT COMPLETION OF THE ELECTRICAL INSTALLATION SHALL BE HELD TO BE IMPLIED AND SHALL BE FURNISHED AND INSTALLED FOR NO ADDITIONAL COST. ENCLOSURES FOR ALL EQUIPMENT SHALL BE SUITABLE FOR USE INTENDED, E.G., WEATHERPROOF FOR EXTERIOR AND WET LOCATIONS. ALL EQUIPMENT SHALL BE RATED FOR USE INTENDED, E.G., VOLTAGE, HORSEPOWER, RATING OF DISCONNECT SWITCHES, ETC.

25. MATERIALS, EQUIPMENT, ETC., INCLUDING THOSE FURNISHED BY OTHERS, THAT ARE TO BE INSTALLED BY THE ELECTRICAL CONTRACTOR SHALL BE RECEIVED AND PROPERLY PROTECTED BY THIS CONTRACTOR UNTIL ENTIRE INSTALLATION IS COMPLETE.

26. MAKE NO INSTALLATION OF WORK WHICH WOULD LEAVE INADEQUATE OPERATION OR SERVICING SPACE FOR ANY ITEM, FOR THE ENTIRE PROJECT. DRAWINGS ARE NOT INTENDED TO SHOW IN DETAIL ALL FEATURES OF WORK, CHECK LOCATION AT ELECTRICAL WORK TO DETERMINE IN ADVANCE THAT IT CLEARS ALL OPENINGS, STRUCTURAL MEMBERS, ETC. WHERE CONTRACT DOCUMENTS, E.G., DRAWINGS AND SPECIFICATIONS DO NOT MEET WITH MINIMUM CODES, ETC., THIS CONTRACTOR SHALL INSTALL ALL THE MINIMUM REQUIRED MATERIALS AND EQUIPMENT FOR NO ADDITIONAL COST.

27. ALL WIRING SHALL BE INSTALLED IN APPROVED RACEWAYS PER CODE. RACEWAYS SHALL BE APPROVED FOR USE INTENDED. ALL EMT CONDUIT SHALL HAVE COMPRESSION TYPE FITTINGS. PVC CONDUIT AND FITTINGS FOR ALL UNDERGROUND CONDUITS. ALL ELECTRICAL CONDUCTORS SHOWN ARE COPPER, MINIMUM SIZE IS NO. 12 AWG. INSULATION TO BE THHN/THWN FOR WIRE SIZES #6 AND SMALLER THHN/THWN/XHHW FOR WIRE SIZES #4 AND LARGER. THE USE OF "MC" CABLE IS NOT APPROVED.

28. THIS CONTRACT IS TO INCLUDE ALL CONTINGENCIES WHICH MAY ARISE AND WHICH MAY BE REQUIRED TO MAKE A COMPLETE ELECTRICAL SYSTEM.

29. THE ELECTRICAL CONTRACTOR SHALL VISIT SITE AND DETERMINE EXTENT OF THE WORK. AT COMPLETION OF ELECTRICAL INSTALLATION, PROVIDE TRILLIUM WITH ACCURATE AS-BUILT DRAWINGS INDICATING ALL VARIATIONS FROM CONTRACT DRAWINGS, AND A LETTER TO THE OWNER'S REPRESENTATIVE STATING PROJECT FULLY COMPLIES WITH ALL CONTRACT DOCUMENTS AND IF NOT, HOW INSTALLATION WAS ACCOMPLISHED. ALL CHANGES SHALL BE SUBJECT TO TRILLIUM'S REPRESENTATIVE'S APPROVAL.

30. PROVIDE NECESSARY LABOR, TOOLS, EQUIPMENT, E.G., VOLTMETER, AMMETER, MEGGER, ETC., AND CHECK ELECTRICAL SYSTEM IN THE PRESENCE OF THE TRILLIUM'S REPRESENTATIVE. ALL TESTING SHALL BE IN ACCORDANCE WITH MANUFACTURER'S RECOMMENDATION OF EQUIPMENT, MATERIAL, ETC., BEING TESTED.

31. THE ELECTRICAL CONTRACTOR SHALL FULLY GUARANTEE THE ENTIRE ELECTRICAL INSTALLATION AND ALL WORK UNDER THIS SECTION FOR A PERIOD OF ONE YEAR FROM THE DATE OF FINAL ACCEPTANCE BY THE OWNER AGAINST ALL EVIDENCE OF IMPERFECT WORKMANSHIP, OF FAILURE OR MALFUNCTION OF MATERIALS AND EQUIPMENT. WORK FOUND TO BE DEFECTIVE WITHIN THIS PERIOD SHALL BE REPLACED PROMPTLY AT NO EXPENSE TO THE OWNER.

32. ALL CONDUITS ABOVE GROUND SHALL BE RIGID GALVANIZED STEEL UNLESS NOTED OTHERWISE.

33. ALL ELECTRICAL WORK SHALL BE IN COMPLIANCE WITH ALL LOCAL CITY & COUNTY CODES, NFPA 52 (CNG FUEL SYSTEMS), & NFPA 70 (NEC).

34. ALL WORK SHOWN IS NEW UNLESS OTHERWISE INDICATED.

35. PROVIDE CONDUIT SEALS AT EACH CONDUIT AS REQUIRED BY NFPA 70 (NEC) ARTICLE 501-15. SEALS ARE REQUIRED WITHIN 18" OF ALL GRADE PENETRATIONS WITHIN HAZARDOUS AREAS. ALL CONDUITS SHALL HAVE SEALOFFS WHERE ENTERING OR LEAVING CLASSIFIED LOCATIONS PER NEC 501.

36. ALL WIRING AND CONDUIT FITTINGS AT DISPENSER, DISPENSER PIT, COMPRESSOR, STORAGE VESSELS AND METER SET ASSEMBLY SHALL BE IN COMPLIANCE WITH HAZARDOUS LOCATION AS DEFINED IN NFPA 70 (NEC) ARTICLE 501 AND NFPA 52 (CNG FUEL SYSTEMS).

37. ALL CONDUIT FITTINGS AND BOXES SHALL BE LISTED AND/OR LABELED BY UNDERWRITERS LABORATORIES OR FACTORY MUTUAL TESTING LABORATORIES. THIS INCLUDES DEVICES, MOTORS AND RELATED ELECTRICAL EQUIPMENT.

38. UNDERGROUND ELECTRICAL CONDUITS SHALL BE PVC CONDUIT AND INSTALLED A MINIMUM OF 8" FROM GAS LINES. ALL BENDS SHALL BE LARGE RADIUS, CONDUIT RUNS OVER 200' WILL HAVE RIGID GALVANIZED STEEL SWEEPS, THAT HAVE BEEN WRAPPED WITH TAPE TO PREVENT CORROSION.

39. CONTRACTOR SHALL VERIFY CONDUIT STUB-UP LOCATION(S) ON PAD PRIOR TO INSTALLATION AND SUBMIT DRAWINGS FOR APPROVAL. ALL CONDUIT STUB-UPS SHALL BE PVC COATED RIGID STEEL CONDUIT, OR WRAPPED RIDGED STEEL CONDUIT AS APPROVED BY TRILLIUM & OWNER. IF APPROVED, STEEL CONDUIT WILL BE WRAPPED WITH TWO (2) WRAPS OF 20 MIL CONDUIT WRAP.

40. CONTRACTOR MUST VERIFY ALL MEASUREMENTS AFFECTING HIS WORK AND ASSUME THE RESPONSIBILITY FOR THEIR CORRECTNESS.

41. GROUND RODS SHALL BE TESTED FOR RESISTANCE TO GROUND. WHERE RESISTANCE OF ANY SINGLE GROUND ROD EXCEEDS 25 OHMS, ADDITIONAL GROUND ROD(S) SHALL BE DRIVEN. UNTIL GROUND RESISTANCE OF LESS THAN 25 OHMS IS OBTAINED.

42. ALL GROUNDING STUB-UPS IN CONCRETE FOR EQUIPMENT GROUND SHALL BE PROTECTED BY 1" PVC CONDUIT.

43. ALL EQUIPMENT USED IN HAZARDOUS AREAS SHALL BE LISTED AND/OR LABELED FOR USE IN CLASS 1, GROUP D, AND DIVISION 1 OR 2 AS REQUIRED. CONTRACTOR SHALL PATCH, PAINT, REPAIR AND CLEAN AS REQUIRED TO MATCH SURROUNDING OF ANY SURFACE DISTURBED OR DAMAGED DURING THE DURATION OF THE PROJECT.

44. CONTRACTOR IS RESPONSIBLE FOR TERMINATION OF ALL CONDUCTORS.

45. UNLESS OTHERWISE NOTED, ALL ELECTRICAL COMPONENTS SHALL BE SUPPLIED BY CONTRACTOR.

46. ALL CONDUCTORS SHALL BE RATED FOR WET LOCATIONS FOR UNDERGROUND INSTALLATIONS & A MIN. OF THHN FOR ABOVE GROUND INSTALLATION.

47. IN CASE OF A CONFLICT BETWEEN SPECIFICATIONS, NOTES AND GENERAL REQUIREMENTS, OR CODES AND STANDARDS FOR THE INSTALLATION – MOST STRINGENT REQUIREMENTS SHALL GOVERN. OBTAIN CLARIFICATION FROM ENGINEER WHERE CONFLICT IS ENCOUNTERED.

48. SEISMIC REQUIREMENTS: ALL EQUIPMENT PROVIDED SHALL WITHSTAND SEISMIC FORCES DEFINED IN IBC 2012 FOR SEISMIC RISK CATEGORY II AND SEISMIC DESIGN CATEGORY FOR SITE LOCATION. THE TERM "WITHSTAND" MEANS THE UNIT WILL REMAIN IN PLACE WITHOUT SEPARATION OF ANY PARTS FROM THE DEVICE WHEN SUBJECTED TO THE SEISMIC FORCES SPECIFIED AND THE UNIT WILL BE FULLY OPERATIONAL AFTER THE SEISMIC EVENT.

COLORADO LICENSED
JEFF M. GREBE
26072
PROFESSIONAL ENGINEER

SGM
118 West Sixth Street, Suite 200
Glenwood Springs, CO 81601
970.945.1004 www.sgm-inc.com

Gunnison County
CNG Fill Station / 508 Tomichi Ave,
Gunnison CO

#	Revision	Date	By
1	Trillium Final Review #1	04/12/2017	

Notes

Job No.	2016-235.001
Drawn by:	TC
Date:	02/16/2017
QC: JG	PE: JG
File:	GunnisonCNG-Elec

E-18 Of 34

i:\2016\2016-235-gunnisonco\001-cngstation\H-Dwgs\Mep\Working\GunnisonCNG-Elec.dwg Plotted: 4/13/2017 8:46 AM By: Ty Costello

GENERAL NOTES

1. PROTECTIVE COATING DOUBLE WRAP OF 4" ROYSTON 1-STEP PRIMER-LESS TAPE MFG BY ROYSTON LABS INC., AND 2" TAPE COAT H35 GRAY PRIMER-LESS TAPE MFG BY TAPE COAT APPLIED TO BELOW GRADE FITTINGS.
2. ALL BELOW GRADE PIPE WILL BE FACTORY COATED WITH POLYKEN YG-III OR APPROVED EQUAL.
3. CARBON STEEL RISERS TO BE OF ASME A-333 GR. 6 PIPE MATERIAL.
4. REFER TO CATHODIC PROTECTION DETAILS FOR BELOW GRADE PIPE. SEE DWG. M-6 FOR ANODE INSTALLATION.
5. 32 LB MAGNESIUM ALLOY ANODES TO BE INSTALLED AT MOST END OF PIPE RISER LOCATIONS. SEE SHEET M-6 FOR MORE DETAILS.
6. ALL INLET PIPING IS TO BE SCHEDULE 80 BUTT WELD V-GROOVE CARBON STEEL PIPE.
7. PROTECTIVE SLEEVES INSTALLED AT EVERY PIPE RISER, EACH SLEEVE WILL BE SEALANT W/ SIRAFLEX 2C JOINT SEALANT COMPOUND (GRAY)
8. ALL ABOVE GRADE PIPING WILL BE CLEANED, PRIMED, AND PAINTED TO MINIMIZE RUST.
9. ALL ABOVE GRADE PIPING AND TUBING SHALL BE PROPERLY BRACED AT 5'-0" O.C. MAXIMUM.
10. WHERE ABOVE GRADE PIPING IS STRAPPED TO SUPPORT, PROTECTIVE SLEEVES WILL BE USED.
11. ALL PIPING WILL BE ASME A-106 GRADE B CARBON STEEL PIPE EXCEPT WHERE OTHERWISE NOTED.
12. ALL STAINLESS STEEL AIR TUBING TO BE PULLED IN UNDERGROUND 2" SCH 40 PVC SLEEVE. ALL ELL'S TO BE LONG RADIUS SWEEPS 24" MIN.
13. DASHED PIPING LINES INDICATE EQUIPMENT INSTALLED BELOW GRADE. SOLID PIPING LINES INDICATE EQUIPMENT INSTALLED ABOVE GRADE.
14. SEE SHEET P-1, GENERAL PIPING SCHEDULES, FOR FLANGE, VALVE AND PIPING SCHEDULE INFORMATION.
15. (T) DESIGNATES EQUIPMENT PROVIDED BY TRILLIUM, INSTALLED BY CONTRACTOR.
16. (MC) DESIGNATES EQUIPMENT PROVIDED BY MAIN CONTRACTOR, INSTALLED BY CONTRACTOR.

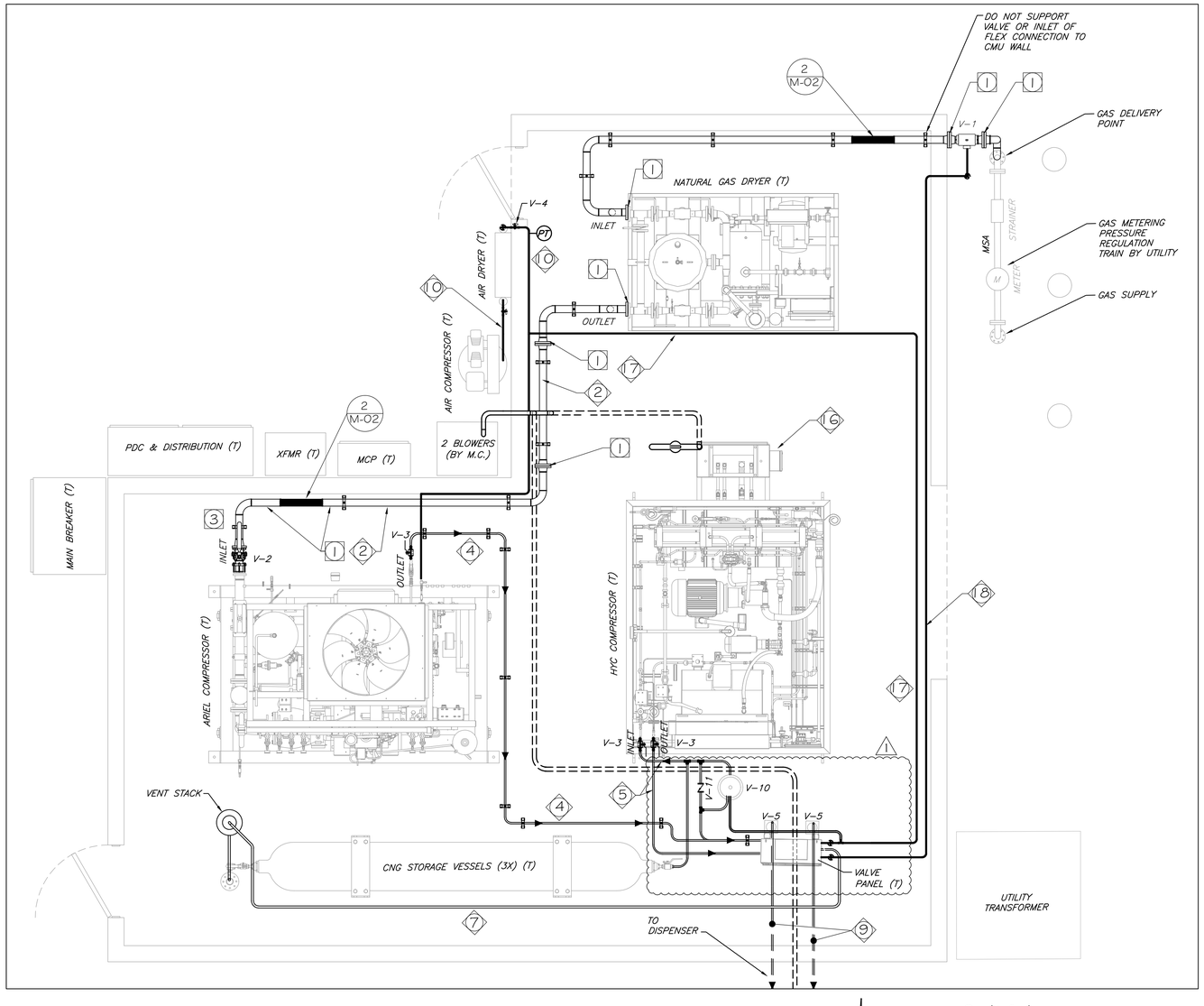

1 M 01 OVERALL PIPING PLAN – EQUIPMENT ROOM
SCALE: 3/8" = 1'-0"

Graphic Scale
0 2' 4' 8'
Scale: 3/8" = 1'-0"

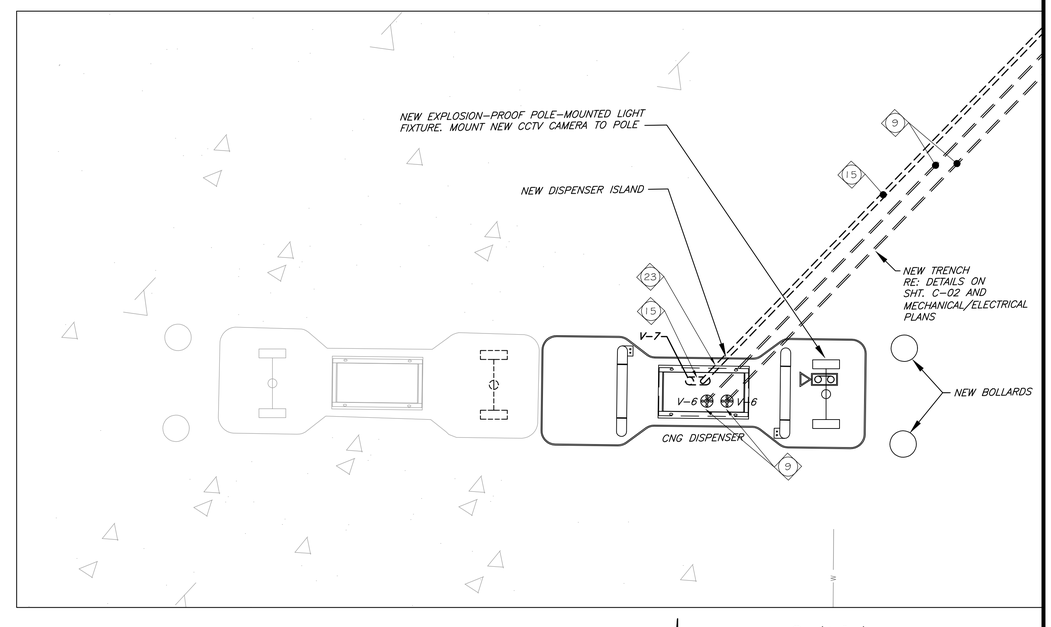

2 M 01 OVERALL PIPING PLAN – DISPENSER
SCALE: 3/8" = 1'-0"

Graphic Scale
0 2' 4' 8'
Scale: 3/8" = 1'-0"

COLORADO LICENSED
J. M. GRIFFITH
26072
PROFESSIONAL ENGINEER

SGM
118 West Sixth Street, Suite 200
Glenwood Springs, CO 81601
970.945.1004 www.sgm-inc.com

Gunnison County
CNG Fill Station / 508 Tomichi Ave,
Gunnison CO

#	Revision	Date	By
1	Trillium Final Review #1	04/12/2017	

Overall Piping Plan

Job No.	2016-235.001
Drawn by:	TC
Date:	02/16/2017
QC: JG	PE: JG
File:	GunnisonCNG-Mech

M-01
Of 34

J:\2016\2016-235-gunnisonco\001-acquisition\H-Dwgs\Mep\Working\GunnisonCNG-Mech.dwg Plotted: 4/13/2017 8:46 AM By: Ty Costello

Graphic Scale

0 2' 4' 8'

Scale: 3/8" = 1'-0"

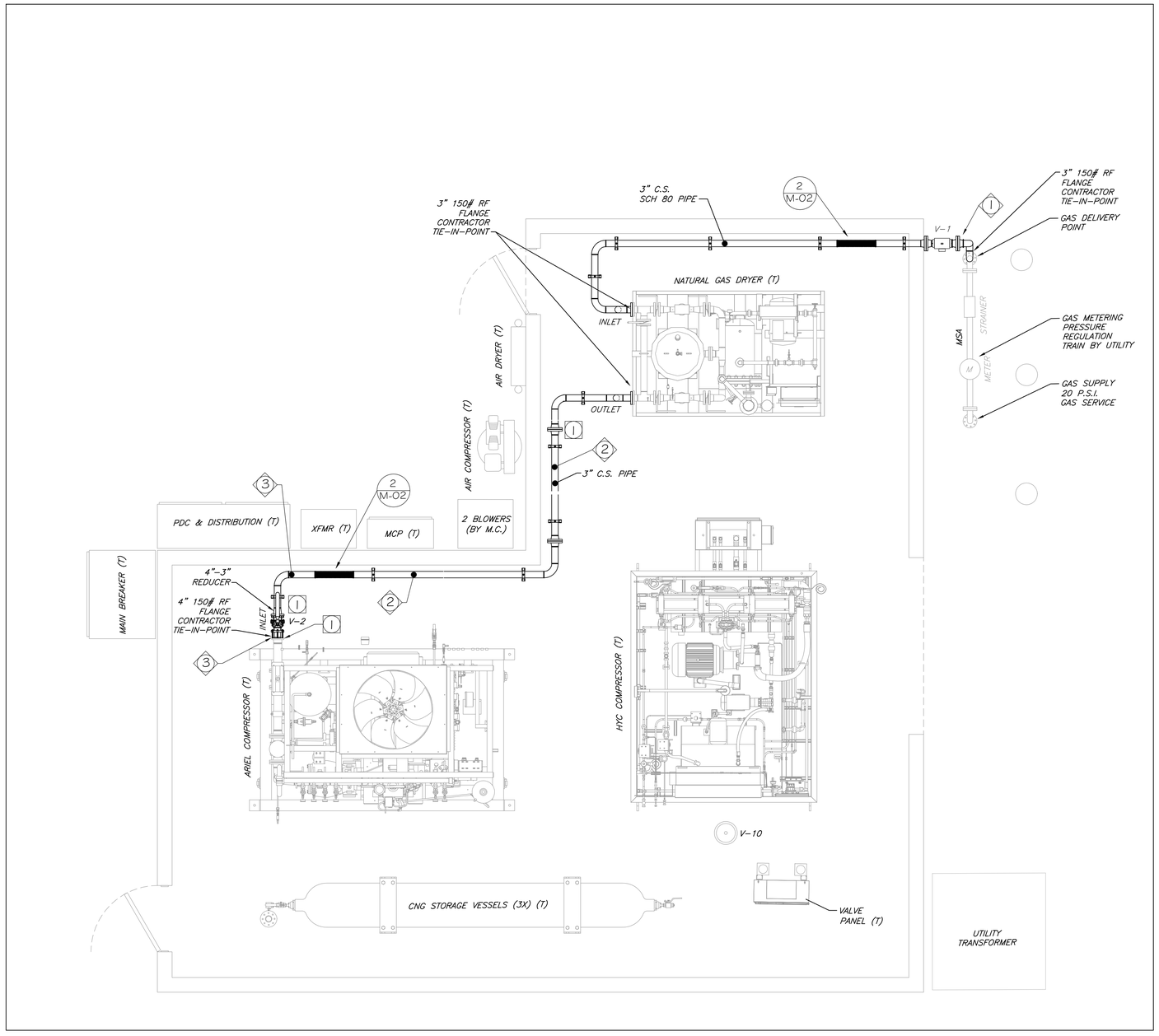

1 / M 02 GAS SUCTION PLAN – EQUIPMENT ROOM

SCALE: 3/8" = 1'-0"

GENERAL NOTES

1. CARBON STEEL RISERS TO BE OF ASME A-333 GR. 6 PIPE MATERIAL.

2. 32 LB MAGNESIUM ALLOY ANODES TO BE INSTALLED AT MOST END OF PIPE RISER LOCATIONS AND EVERY 100'. SEE SHEET P-6 FOR MORE DETAILS.

3. ALL INLET PIPING IS TO BE SCHEDULE 40 BUTT WELD V-GROOVE CARBON STEEL PIPE.

4. PROTECTIVE SLEEVES INSTALLED AT EVERY PIPE RISER, EACH SLEEVE WILL BE SEALANT W/ SIKAFLEX 2C JOINT SEALANT COMPOUND (GRAY).

5. ALL ABOVE GRADE PIPING WILL BE CLEANED, PRIMED, AND PAINTED TO MINIMIZE RUST.

6. ALL ABOVE GRADE PIPING AND TUBING SHALL BE PROPERLY BRACED @ 5'-0" O.C. MAXIMUM.

7. WHERE ABOVE GRADE PIPING IS STRAPPED TO SUPPORT, PROTECTIVE SLEEVES WILL BE USED.

8. ALL PIPING WILL BE ASME A-106 GRADE B CARBON STEEL PIPE EXCEPT WHERE OTHERWISE NOTED.

9. DASHED PIPING LINES INDICATE EQUIPMENT INSTALLED BELOW GRADE. SOLID PIPING LINES INDICATE EQUIPMENT INSTALLED ABOVE GRADE.

10. ALL FLEXIBLE CONNECTIONS ARE TO BE STAINLESS STEEL CORRUGATED METAL HOSE WITH A STAINLESS STEEL DOUBLE BRAID.

11. ALL FLEXIBLE CONNECTIONS WILL BE SUPPLIED WITH A PERMANENTLY AFFIXED TAG STAMPED WITH THE MANUFACTURER NAME, MANUFACTURED DATE, AND MAWP PRESSURE RATING.

12. THE MAWP PRESSURE RATING FOR THE FLEXIBLE CONNECTION SHALL BE A MINIMUM OF 200 PSI. OR 150% OF MAXIMUM MSA OUT LET PRESSURE, WHICH EVER IS GREATER.

13. SEE SHEET M-11, GENERAL PIPING SCHEDULES, FOR FLANGE, VALVE AND PIPING SCHEDULE INFORMATION

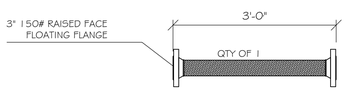

2 / M 02 FLEX CONNECTION DETAIL

SCALE: N.T.S.

COLORADO LICENSED
JOHN M. GIRARDI
26072
PROFESSIONAL ENGINEER

SGM
118 West Sixth Street, Suite 200
Glenwood Springs, CO 81601
970.945.1004 www.sgm-inc.com

Gunnison County
CNG Fill Station / 508 Tomichi Ave,
Gunnison CO

#	Revision	Date	By
1	Trillium Final Review #1	04/12/2017	

Suction Piping Plan

Job No.	2016-235.001
Drawn by:	TC
Date:	02/16/2017
QC: JG	PE: JG
File:	GunnisonCNG-Mech

M-02

Of 34

G:\2016\2016-235 gunnisonco\001-congstation\H-Dwgs\Mep\Working\GunnisonCNG-Mech.dwg Plotted: 4/13/2017 8:46 AM By: Ty Costello

GENERAL NOTES

1. PRIMERLESS TAPE MFG BY ROYSTON LABS INC., AND 2" TAPE COAT H35 GRAY PRIMER-LESS TAPE MFG BY TAPE COAT APPLIED TO BELOW GRADE FITTINGS. PROTECTIVE COATING DOUBLE WRAP OF 4" ROYSTON 1-STEP .

2. ALL BELOW GRADE PIPE WILL BE FACTORY COATED WITH POLYKEN YG-III OR APPROVED EQUAL.

3. CARBON STEEL RISERS TO BE OF ASME A-333 GR. 6 PIPE MATERIAL.

4. 32 LB MAGNESIUM ALLOY ANODES TO BE INSTALLED AT MOST END OF PIPE RISER LOCATIONS. SEE SHEET M-11 FOR MORE DETAILS.

5. PROTECTIVE SLEEVES INSTALLED AT EVERY PIPE RISER, EACH SLEEVE WILL BE SEALANT W/ SIRAFLEX 2C JOINT SEALANT COMPOUND (GRAY)

6. ALL ABOVE GRADE PIPING WILL BE CLEANED, PRIMED, AND PAINTED TO MINIMIZE RUST.

7. ALL ABOVE GRADE PIPING AND TUBING SHALL BE PROPERLY BRACED @ 5'-0" O.C. MAXIMUM.

8. WHERE ABOVE GRADE PIPING IS STRAPPED TO SUPPORT, PROTECTIVE SLEEVES WILL BE USED.

9. ALL PIPING WILL BE ASME A-106 GRADE B CARBON STEEL PIPE EXCEPT WHERE OTHERWISE NOTED.

10. ALL STAINLESS STEEL AIR TUBING TO BE PULLED IN UNDERGROUND 2" SCH 40 PVC SLEEVE. ALL ELL'S TO BE LONG RADIUS SWEEPS 24" MIN.

11. DASHED PIPING LINES INDICATE EQUIPMENT INSTALLED BELOW GRADE. SOLID PIPING LINES INDICATE EQUIPMENT INSTALLED ABOVE GRADE.

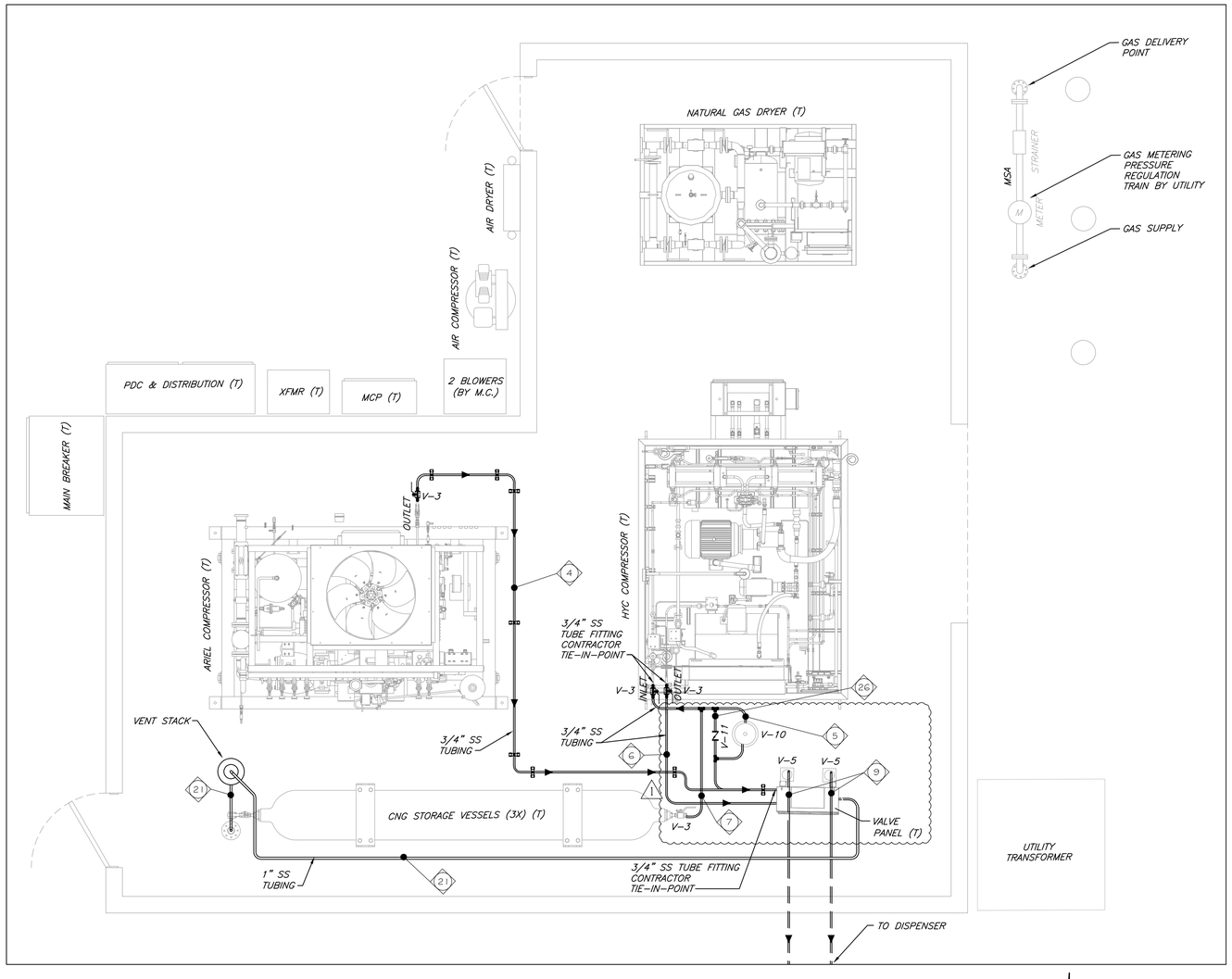

1 M 0.3 HIGH PRESSURE TUBING PLAN – EQUIPMENT ROOM
SCALE: 3/8" = 1'-0"

Graphic Scale 0 2' 4' 8'
Scale: 3/8" = 1'-0"

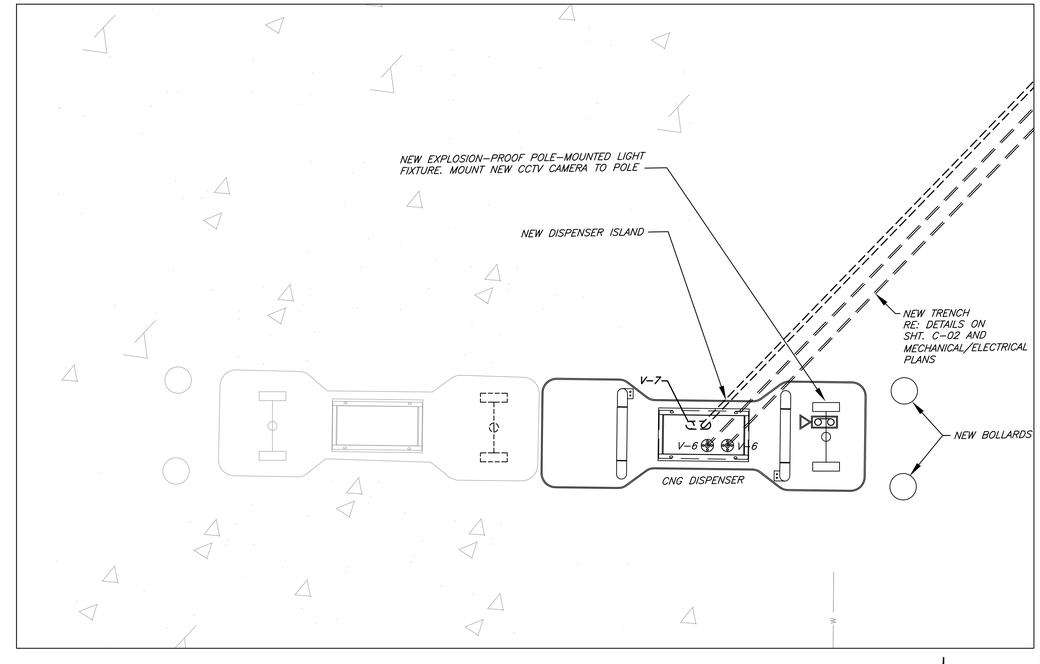

2 M 0.3 HIGH PRESSURE TUBING PLAN – DISPENSER
SCALE: 3/8" = 1'-0"

Graphic Scale 0 2' 4' 8'
Scale: 3/8" = 1'-0"

COLORADO LICENSED
SCOTT M. GREENFIELD
26072
PROFESSIONAL ENGINEER

SGM
118 West Sixth Street, Suite 200
Glenwood Springs, CO 81601
970.945.1004 www.sgm-inc.com

Gunnison County
CNG Fill Station / 508 Tomichi Ave,
Gunnison CO

#	Revision	Date	By
1	Trillium Final Review #1	04/12/2017	

High Pressure Tubing Plan

Job No.	2016-235.001
Drawn by:	TC
Date:	02/16/2017
QC: JG	PE: JG
File:	GunnisonCNG-Mech

M-03
Of 34

I:\2016\2016-235-gunnisonco\001-negotiation\Ir-Dwgs\Mep\Working\GunnisonCNG-Mech.dwg Plotted: 4/13/2017 8:46 AM By: Ty Costello

GENERAL NOTES

1. PROTECTIVE SLEEVES INSTALLED AT EVERY PIPE RISER, EACH SLEEVE WILL BE SEALANT W/ SIKAFLEX 2C JOINT SEALANT COMPOUND (GRAY).
2. ALL ABOVE GRADE PIPING AND TUBING SHALL BE PROPERLY BRACED @ 5'-0" O.C. MAXIMUM.
3. WHERE ABOVE GRADE PIPING IS STRAPPED TO SUPPORT, PROTECTIVE SLEEVES WILL BE USED.
4. ALL STAINLESS STEEL AIR TUBING TO BE PULLED IN UNDERGROUND 2" SCH 40 PVC SLEEVE. ALL ELL'S TO BE LONG RADIUS SWEEPS 24" MIN.
5. DASHED PIPING LINES INDICATE EQUIPMENT INSTALLED BELOW GRADE. SOLID PIPING LINES INDICATE EQUIPMENT INSTALLED ABOVE GRADE
6. SEE SHEET M-11 FOR FLANGE, VALVE AND PIPING SCHEDULE INFORMATION.
7. PURGE AIR ROUTED AS ONE PIECE HOMERUN FORM PURGE BLOWER MANIFOLD TO HY-C, DISPERSERS A & B.
8. UNDERGROUND MATERIAL IS DRISCOPLEX 6500 MDPE, 2" IPS.
9. ABOVE GROUND MATERIAL IS 2" SCH 40 PVC.

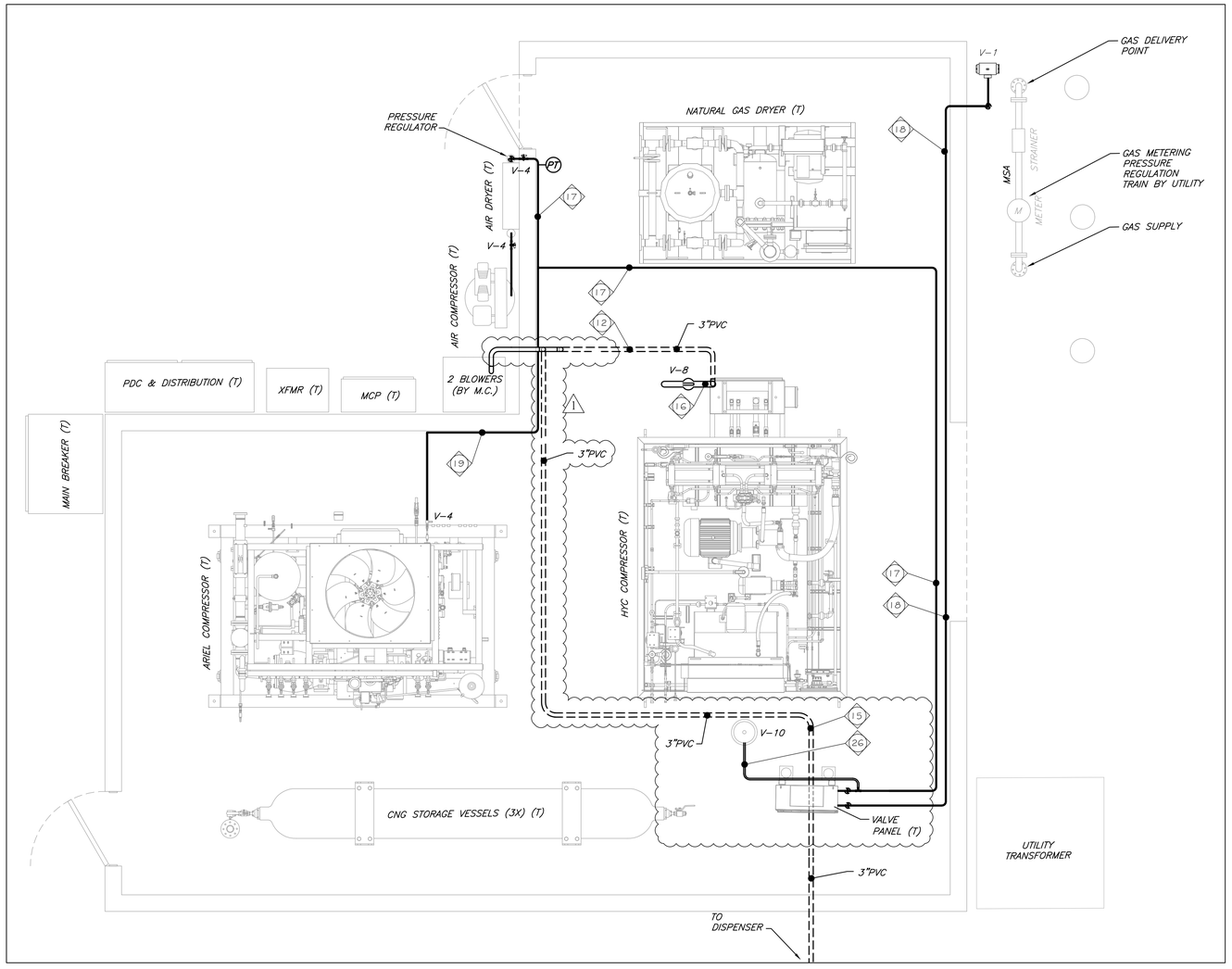

1 / M 04 AIR PIPING PLAN
SCALE: 3/8" = 1'-0"

Graphic Scale
0 2' 4' 8'
Scale: 3/8" = 1'-0"

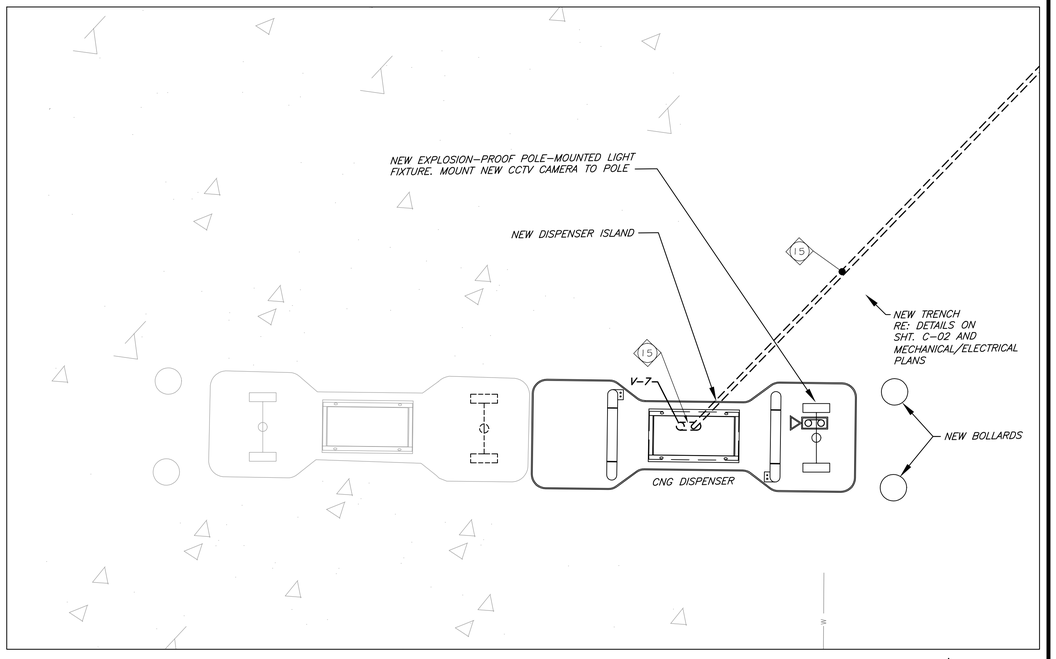

2 / M 04 AIR PIPING PLAN
SCALE: 3/8" = 1'-0"

Graphic Scale
0 2' 4' 8'
Scale: 3/8" = 1'-0"

COLORADO LICENSED
JAY M. GILBERT
26072
PROFESSIONAL ENGINEER

SGM
118 West Sixth Street, Suite 200
Glenwood Springs, CO 81601
970.945.1004 www.sgm-inc.com

Gunnison County
CNG Fill Station / 508 Tomichi Ave,
Gunnison CO

#	Revision	Date	By
1	Trillium Final Review #1	04/12/2017	

Air Piping Plan

Job No.	2016-235.001
Drawn by:	TC
Date:	02/16/2017
QC: JG	PE: JG
File:	GunnisonCNG-Mech

M-04
Of 34

I:\2016\2016-235-gunnisonco\2017-organization\dwgs\Mep\Working\GunnisonCNG-Mech.dwg Plotted: 4/13/2017 8:47 AM By: Tj Costello

GENERAL NOTES

1. VALVE SIZES NOT CALLED OUT ON THE DRAWINGS OR SPECIFICATIONS, SHALL BE THE SAME SIZE AS THE LINE THE VALVES ARE SERVING.
2. CONTRACTOR SHALL VERIFY ALL INLET AND OUTLET POINTS ON ALL EQUIPMENT.
3. ALL SOLENOID / ACTUATOR VALVES ARE NORMALLY CLOSED UNLESS OTHERWISE SPECIFIED.
4. ALL CARBON STEEL PIPING WILL BE; A-106 GRADE B CARBON STEEL.
5. ALL THREADED FITTINGS WILL BE WRAPPED WITH TWO (2) WRAPS OF SWAGELOK PTFE TAPE THEN COATED WITH A FILM OF SWAGELOK SWAK.
6. TRILLIUM WILL SUPPLY ALL VALVES EXCEPT PVC VALVES.
7. SEE SHEET P-1, GENERAL PIPING SCHEDULES, FOR FLANGE, VALVE AND PIPING SCHEDULE INFORMATION.

KEYNOTES

1. AIR CONNECTION TO VALVE ACTUATOR.

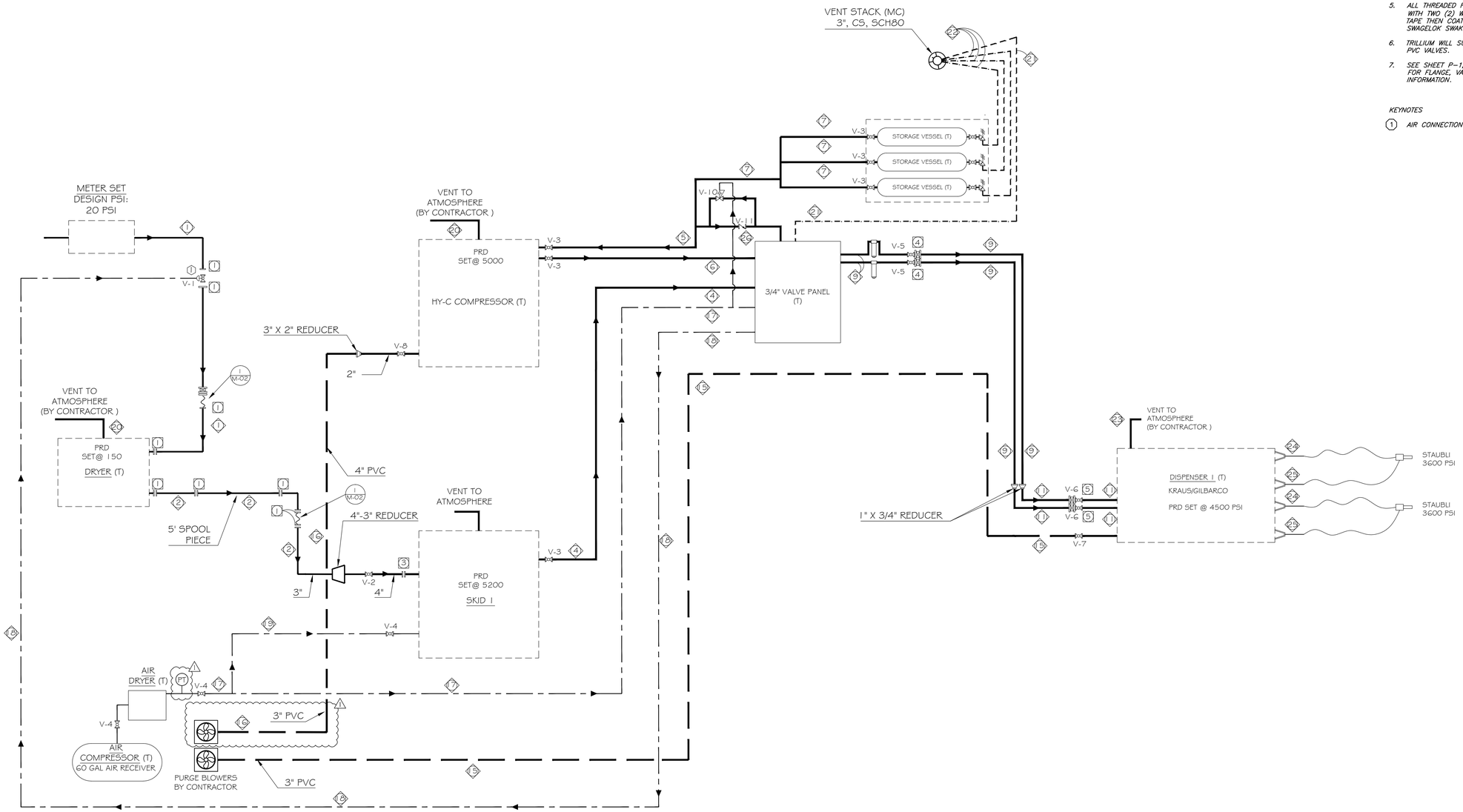

SGM
118 West Sixth Street, Suite 200
Glenwood Springs, CO 81601
970.945.1004 www.sgm-inc.com

COLORADO LICENSED
JOHN M. GRIFFITH
26072
PROFESSIONAL ENGINEER

Gunnison County
CNG Fill Station / 508 Tomichi Ave,
Gunnison CO

#	Revision	Date	By
1	Trillium Final Review #1	04/12/2017	

Piping & Instrumentation Diagram

Job No.	2016-235.001
Drawn by:	TC
Date:	02/16/2017
QC: JG	PE: JG
File:	GunnisonCNG-Mech

M-05

I:\2016\2016-235-gunnisonco\07-engineering\Mech\Working\GunnisonCNG-Mech.dwg Plotted: 4/13/2017 8:47 AM By: Ty Costello

GENERAL NOTES

1. VALVE SIZES NOT CALLED OUT ON THE DRAWINGS OR SPECIFICATIONS, SHALL BE THE SAME SIZE AS THE LINE THE VALVES ARE SERVING.
2. CONTRACTOR SHALL VERIFY ALL INLET AND OUTLET POINTS ON ALL EQUIPMENT.
3. ALL SOLENOID/ACTUATOR VALVES ARE NORMALLY CLOSED UNLESS OTHERWISE SPECIFIED.
4. ALL CARBON STEEL PIPING WILL BE; A-106 GRADE B CARBON STEEL.
5. ALL THREADED FITTINGS WILL BE WRAPPED WITH TWO (2) WRAPS OF TEFLON TAPE.

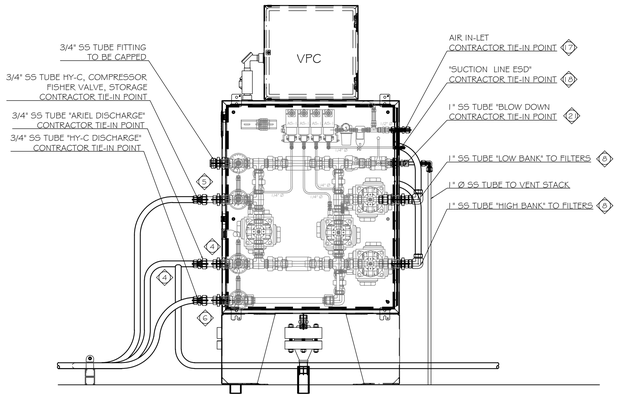

2 / M 06 VALVE PANEL FRONT VIEW
SCALE: N.T.S.

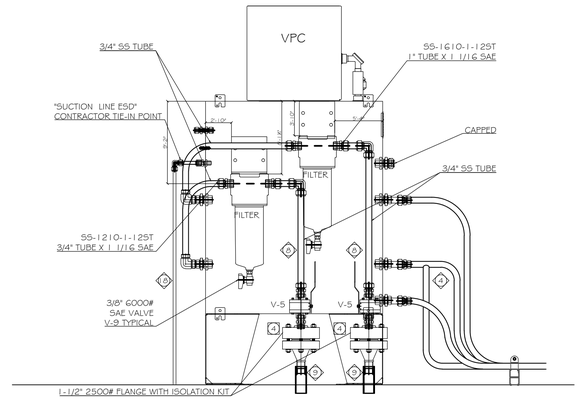

3 / M 06 VALVE PANEL REAR VIEW
SCALE: N.T.S.

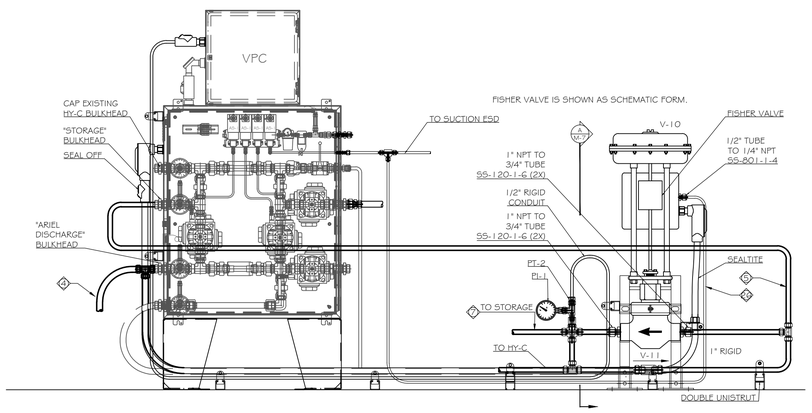

1 / M 06 VALVE PANEL SECTION A
SCALE: N.T.S.

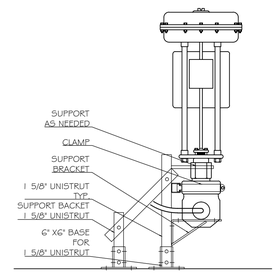

4 / M 06 VALVE PANEL SIDE VIEW
SCALE: N.T.S.

COLORADO LICENSED
GREGORY W. GRAFF
26072
PROFESSIONAL ENGINEER

SGM
118 West Sixth Street, Suite 200
Glenwood Springs, CO 81601
970.945.1004 www.sgm-inc.com

Gunnison County
CNG Fill Station / 508 Tomichi Ave,
Gunnison CO

#	Revision	Date	By
1	Trillium Final Review #1	04/12/2017	

Valve Panel Piping Details

Job No.	2016-235.001
Drawn by:	TC
Date:	02/16/2017
QC: JG	PE: JG
File:	GunnisonCNG-Mech

M-06
Of 34

J:\2016\2016-235-gunnisonco\001-acquisition\1-Dwgs\Mep\Working\GunnisonCNG-Mech.dwg Plotted: 4/12/2017 8:47 AM By: Ty Costello

GENERAL NOTES

1. CONTRACTOR TO SUPPLY DOUBLE UNISTRUT AT ALL PIPE SUPPORT LOCATIONS TO ENSURE ADEQUATE CLEARANCE BETWEEN FLANGES & GROUND.

2. ALL PIPING WILL BE BRACED @ 5'-0" O.C. MINIMUM.

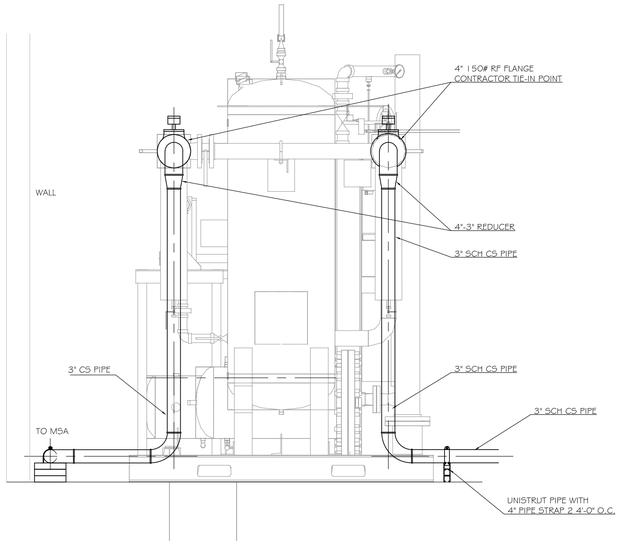

1 / M 07 GAS DRYER PIPE DETAIL – FRONT VIEW

SCALE: N.T.S.

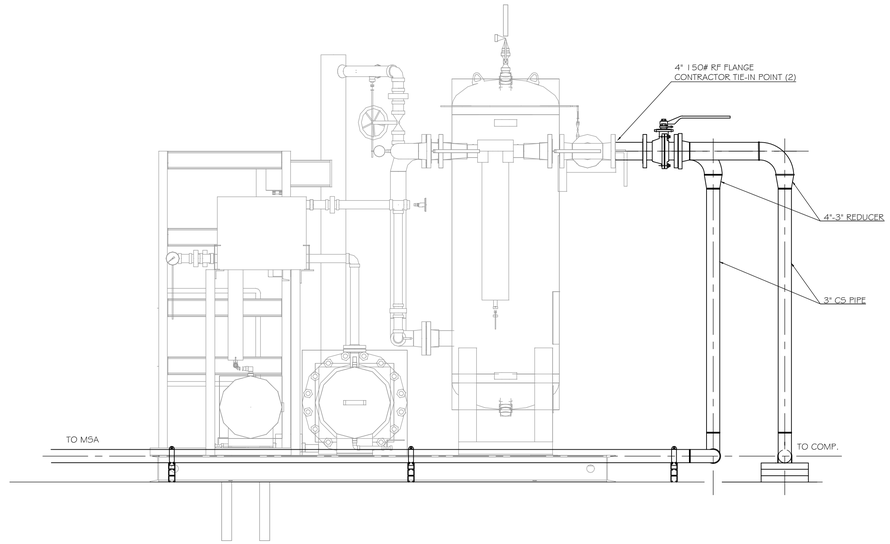

2 / M 07 GAS DRYER PIPE DETAIL – SIDE VIEW

SCALE: N.T.S.

COLORADO LICENSED
JOHN M. GOLDEN
26072
PROFESSIONAL ENGINEER

SGM
118 West Sixth Street, Suite 200
Glenwood Springs, CO 81601
970.945.1004 www.sgm-inc.com

Gunnison County
CNG Fill Station / 508 Tomichi Ave,
Gunnison CO

#	Revision	Date	By
1	Trillium Final Review #1	04/12/2017	

Gas Dryer Piping Details

Job No.	2016-235.001
Drawn by:	TC
Date:	02/16/2017
QC: JG	PE: JG
File:	GunnisonCNG-Mech

M-07

Of 34

I:\2016\2016-235-gunnisonco\001-registration\In-Dwgs\Mech\Working\GunnisonCNG-Mech.dwg Plotted: 4/13/2017 8:47 AM By: Ty Castello

COMPRESSOR PACKAGE	QUANTITY OF ONE (1)
PACKAGER:	ANGI
MANUFACTURER:	ARIEL CORPORATION
MODEL:	JGQ/2, NG300E, 4 STAGE
CAPACITY:	235 SCFM @ 10PSI
1ST STAGE	10.750", P-HE, 225 MAWP
2ND STAGE	5.500", P-CE, 525 MAWP
3RD STAGE	3.625", SG-CE, 2550 MAWP
4TH STAGE	1.750", SG-FS-HE, 6100 MAWP
WEIGHT:	14,500 LBS
MOTOR	
MANUFACTURER:	TECO / WESTINGHOUSE (OR EQUAL)
MODEL:	WEG
VOLTAGE:	460 VAC, 3 PHASE, 60 Hz
SERVICE DUTY:	S.F. 1.15
RATING:	200 HP @ 1,785 RPM
ENCLOSURE:	TOTALLY ENCLOSED FAN COOLED (TEFC)
COOLER	
MANUFACTURER:	BALDOR
MODEL:	BALDOR
DRIVE:	10 HP TEFC AC ELECTRIC MOTOR
SKID CONTROLS	
MANUFACTURER:	ANGI
CONTROLLER:	ALLEN BRADLEY, COMPACT LOGIX, POINT I/O

Hy-C COMPRESSOR PACKAGE	QUANTITY OF ONE (1)
PACKAGER:	TRILLIUM CNG
MANUFACTURER:	PINNACLE CNG
MODEL:	TACTICAL 5" Hy-C
1ST STAGE:	5" CYLINDER WITH 16" STROKE
2ND STAGE:	5" CYLINDER WITH 16" STROKE
WEIGHT:	15,000 LBS
MOTOR	
MODEL:	75 HP
VOLTAGE:	150 A @ 480 V, 3 PHASE
SERVICE DUTY:	CONTINUOUS RATING, S.F. 1.15, 1800 RPM
RATING:	NEMA PREMIUM EFFICIENCY
ENCLOSURE:	TOTALLY ENCLOSED FAN COOLED (TEFC)
COOLER	
MANUFACTURER:	AIR COOL EXCHANGERS
MODEL:	C30IM-4
DRIVE:	5 HP TEFC ELECTRIC MOTOR
SKID CONTROLS	
MANUFACTURER:	MURPHY
CONTROLLER:	ALLEN BRADLEY, COMPACT LOGIX, POINT I/O

NATURAL GAS DRYER	QUANTITY OF ONE (1)
PACKAGER:	PSB INDUSTRIES
MODEL:	NG-SR-10-3-DDP, SINGLE TOWER DRYER
INLET CAPACITY:	240 SCFM @ 10 PSI
CONNECTION SIZE:	3" 150 LBS FLANGE INLET/OUTLET
DRYER NEMA CYCLE:	8 HOURS W/ AUTODEW
POWER:	460 V / 3 PHASE / 60 Hz, 21.2 FLA
CONTROLLER:	ALLEN BRADLEY, COMPACT LOGIX, POINT I/O
BYPASS:	BUTTERFLY VALVE
WEIGHT:	4,500 LBS W/ DESICCANT INSTALLED

CNG STORAGE CYLINDERS	QUANTITY OF THREE (3)
PACKAGER:	CP INDUSTRIES
MODEL:	24" OD x 1.564" MW x 16'-3" LONG CYLINDER
MAWP:	5,500 PSI
WATER VOLUME:	33.5 CU. FT. EACH
CNG VOLUME:	11,334 SCF EACH @4,500 PSI
TOTAL CNG VOLUME:	34,002 SCF @4,500 PSI
WEIGHT:	7,400 LBS. PER VESSEL

CNG PUBLIC VALVE PANEL	QUANTITY OF ONE (1)
PACKAGER:	JW-POWER COMPANY
MODEL:	TWO BANK PUBLIC VALVE PANEL
SIZE:	3/4" VALVES AND TUBING

TWIN HOSE PUBLIC DISPENSER	QUANTITY OF ONE (1)
PACKAGER:	KRAUS GLOBAL/GILBARCO
MODEL:	HAM 2(S/D)CGG-P63CX12B2B01
FLOW METER:	MICRO-MOTION CNG 50
NOZZLE PUBLIC 1:	STAUBLI NGV TYPE II W/ OASIS 3-WAY VALVE
NOZZLE PUBLIC 2:	STAUBLI NGV TYPE II W/ OASIS 3-WAY VALVE
MAWP:	4,500 PSI
FILTRATION:	(2) PARKER J6 HOUSING, (1) GRADE 10, (1) GRADE 4

AIR DRYER	QUANTITY OF ONE (1)
PACKAGER:	BRABAZON - PURE-AIR
AIR DRYER:	OUTDOOR RATED, W/ HEAT TRACE
MODEL:	MH-25N
VOLTAGE:	115 - 230V, 1 PHASE, 60HZ

MASTER CONTROL PANEL	QUANTITY OF ONE (1)
MANUFACTURER:	NUCO
CONTROLLER:	ALLEN BRADLEY, COMPACT LOGIX, PLC

POWER DISTRIBUTION CENTER	QUANTITY OF ONE (1)
PACKAGER:	EDEC
MAIN BREAKER:	EATON, 700 AMP, SERVICE ENTRANCE RATED
MODEL:	CUSTOM 700 AMP
POWER:	700 AMP, 480V, 3-PHASE, 4 WATTS, NEMA 3R
MAIN MOTOR STARTER:	EATON, 200 HP, S-811 SOFT STARTER

AIR COMPRESSOR	QUANTITY OF ONE (1)
PACKAGER:	BRABAZON
TYPE:	RECIPRICATING AIR COMPRESSOR
MODEL:	5 HP, B53V84-ELITE
VOLTAGE:	460 V, 3 PHASE, 60HZ
AIR TANK:	80 GALLON, VETICAL STEEL TANK
CONTROLS:	UL ELECTRICAL CONTROLS

o\Desktop\V-6.jpg

GENERAL NOTES

1. CONTRACTOR TO SUPPLY DOUBLE UNISTRUT AT ALL PIPE SUPPORT LOCATIONS TO ENSURE ADEQUATE CLEARANCE BETWEEN FLANGES & GROUND.
2. ALL PIPING WILL BE BRACED @ 5'-0" O.C. MINIMUM.

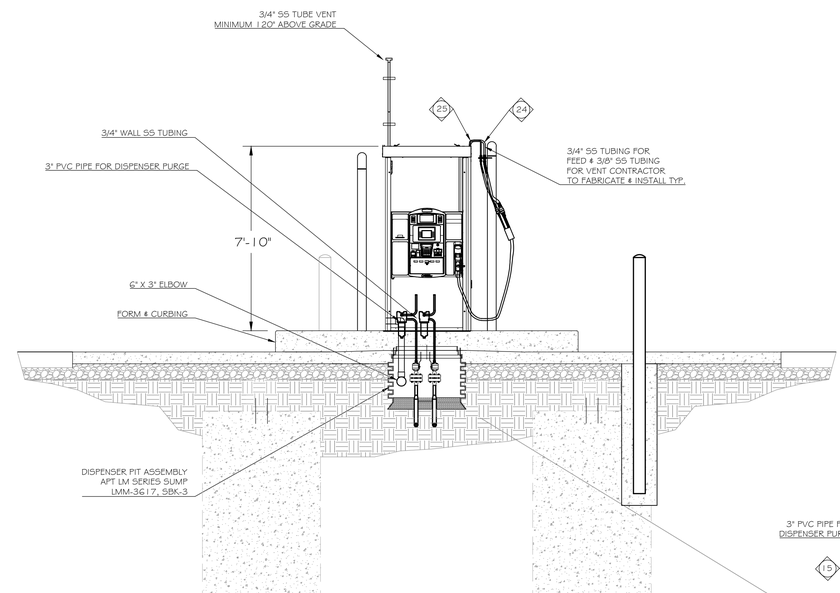

1 M 08 DISPENSER ISLAND PIPE DETAIL
SCALE: N.T.S.

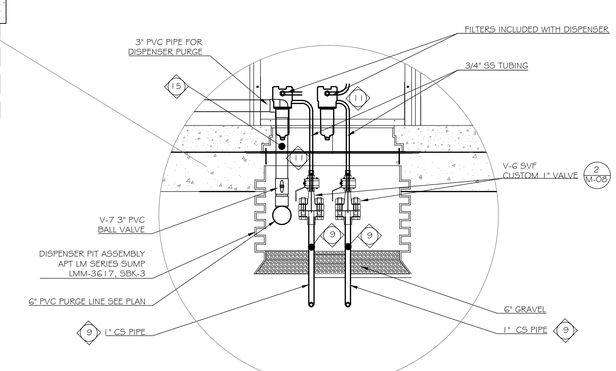

COLORADO LICENSED
TIMOTHY M. CASTELLO
26072
PROFESSIONAL ENGINEER

SGM
118 West Sixth Street, Suite 200
Glenwood Springs, CO 81601
970.945.1004 www.sgm-inc.com

Gunnison County
CNG Fill Station / 508 Tomichi Ave,
Gunnison CO

#	Revision	Date	By
1	Trillium Final Review #1	04/12/2017	

Equipment Schedules & Dispenser Area Piping Details

Job No.	2016-235.001		
Drawn by:	TC		
Date:	02/16/2017		
QC:	JG	PE:	JG
File:	GunnisonCNG-Mech		

M-08
Of 34

I:\2016\2016-235-gunnisonco\001-registration\In-Depth Mech Working\GunnisonCNG-Mech.dwg Plotted: 4/13/2017 8:47 AM By: Tc Castello

GENERAL NOTES

1. CONTRACTOR TO SUPPLY DOUBLE UNISTRUT AT ALL PIPE SUPPORT LOCATIONS TO ENSURE ADEQUATE CLEARANCE BETWEEN FLANGES & GROUND
2. ALL PIPING WILL BE BRACED @ 5'-0" O.C. MINIMUM.

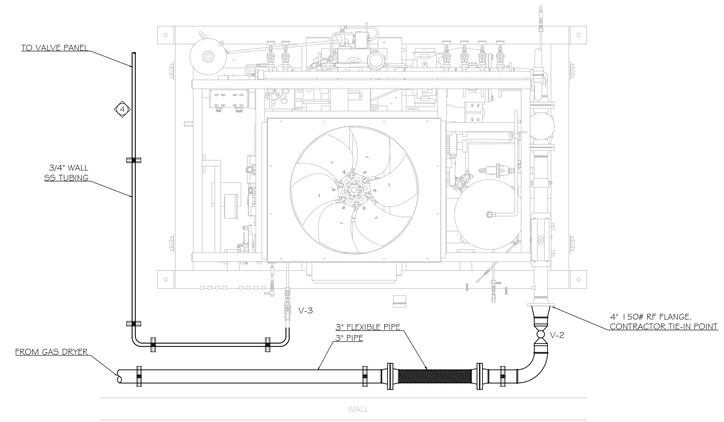

3 / M 09 GAS COMPRESSOR 1 TOP VIEW
SCALE: N.T.S.

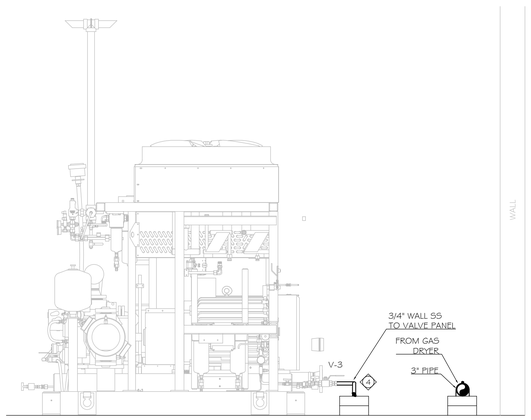

1 / M 09 GAS COMPRESSOR 1 END VIEW
SCALE: N.T.S.

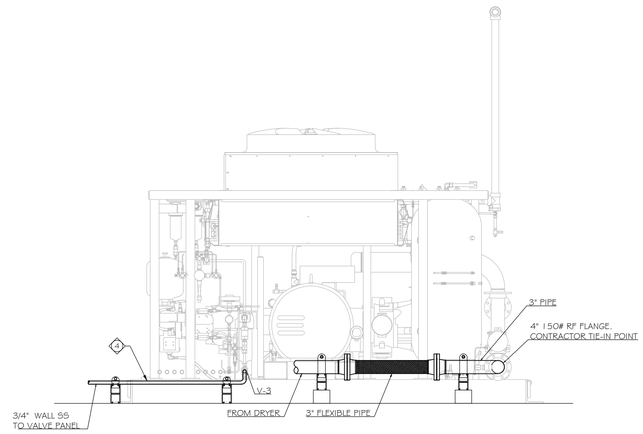

2 / M 09 GAS COMPRESSOR 1 SIDE VIEW
SCALE: N.T.S.

COLORADO LICENSED
26072
PROFESSIONAL ENGINEER

SGM
118 West Sixth Street, Suite 200
Glenwood Springs, CO 81601
970.945.1004 www.sgm-inc.com

Gunnison County
CNG Fill Station / 508 Tomichi Ave,
Gunnison CO

#	Revision	Date	By
1	Trillium Final Review #1	04/12/2017	

Compressor Piping Details

Job No.	2016-235.001
Drawn by:	TC
Date:	02/16/2017
QC: JG	PE: JG
File:	GunnisonCNG-Mech

M-09
Of 34

G:\2016\2016-235-gunnisonco\001-acquisition\H-Dwgs\Mech Working\GunnisonCNG-Mech.dwg Plotted: 4/12/2017 8:47 AM By: Ty Costello

GENERAL NOTES

1. CONTRACTOR TO SUPPLY DOUBLE UNISTRUT AT ALL PIPE SUPPORT LOCATIONS TO ENSURE ADEQUATE CLEARANCE BETWEEN FLANGES & GROUND

2. ALL PIPING WILL BE BRACED @ 5'-0" O.C. MINIMUM.

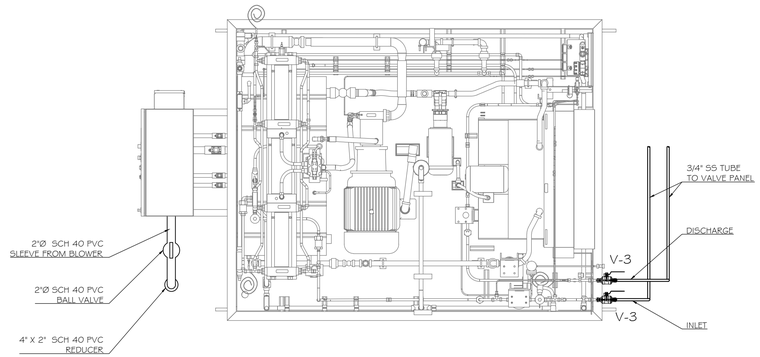

1 / M 10 HYC COMPRESSOR PIPING DETAIL – TOP VIEW

SCALE: N.T.S.

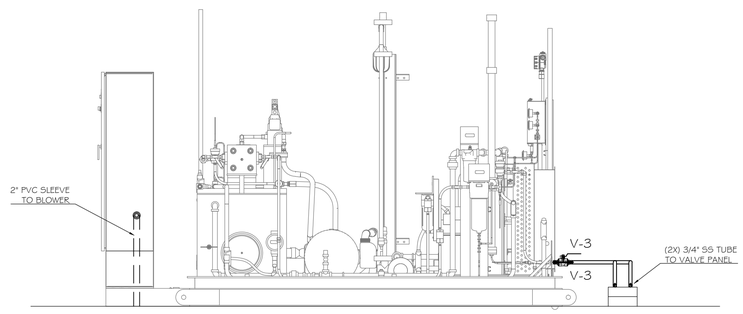

2 / M 10 HYC COMPRESSOR PIPING DETAIL – SIDE VIEW

SCALE: N.T.S.

COLORADO LICENSED
26072
PROFESSIONAL ENGINEER

SGM
118 West Sixth Street, Suite 200
Glenwood Springs, CO 81601
970.945.1004 www.sgm-inc.com

Gunnison County
CNG Fill Station / 508 Tomichi Ave,
Gunnison CO

#	Revision	Date	By
1	Trillium Final Review #1	04/12/2017	

HYC Compressor Piping Details

Job No.	2016-235.001
Drawn by:	TC
Date:	02/16/2017
QC: JG	PE: JG
File:	GunnisonCNG-Mech

M-10

Of 34

J:\2016\2016-235-gunnisoncng\001-acquisition\H-Dwgs\Mep\Working\GunnisonCNG-Mech.dwg Plotted: 4/12/2017 8:47 AM By: Ty Costello

GUNNISON CNG PIPING SCHEDULE

NO.	PIPING ROUTE	PIPE SIZE AND MATERIAL NOM. DIA.	OUT. DIA.	WALL	MATL.	SCHD	M.W.P. (PSIG)	M.O.P. (PSIG)	PRESSURE (HIGH/LOW)	TEST PRESSURE ASME B31.3 345.4.2
1	MSA TO DRYER	3"	3.500	0.300	CS	80	2398	100	LOW	200 PSI MIN
2	DRYER TO GAS COMPRESSOR	3"	3.500	0.300	CS	80	2398	100	LOW	200 PSI MIN
3	NOT USED	4"	4.5	0.337	CS	80	2016	45	LOW	200 PSI MIN
4	COMPRESSOR TO HIGH PRESSURE TO VALVE PANEL	3/4"	0.750	0.109	SS TUBING		5800	4500	HIGH	SOAP TEST
5	VALVE PANEL TO HY-C	3/4"	0.750	0.109	SS TUBING		5800	4500	HIGH	SOAP TEST
6	HY-C TO VALVE PANEL	3/4"	0.750	0.109	SS TUBING		5800	4500	HIGH	SOAP TEST
7	VALVE PANEL TO STORAGE	3/4"	0.750	0.109	SS TUBING		5800	4500	HIGH	SOAP TEST
8	NOT USED	3/4"	0.750	0.109	SS TUBING		5800	4500	HIGH	SOAP TEST
9	VALVE PANEL TO DISPENSER	1"	1.000	0.120	SS TUBING		4700	4500	HIGH	SOAP TEST
10	NOT USED	-	-	-	-	-	-	-	-	-
11	DISPENSER TUBING	3/4"	0.750	0.109	SS TUBING		5800	4500	HIGH	SOAP TEST
12	AIR HEADER FROM BLOWER	3"	8.625	0.322	METAL FABRICATED MANIFOLD					
13	NOT USED	-	-	-	-	-	-	-	-	-
14	NOT USED	-	-	-	-	-	-	-	-	-
15	AIR HEADER FROM BLOWER TO DISPENSERS	3"	-	-	DRISCOPLEX 6500 MDPE					
16	AIR HEADER FROM BLOWER TO HY-C	3"	-	-	DRISCOPLEX 6500 MDPE					
17	AIR TO VALVE PANEL	1/2"	0.500	0.065	SS TUBING		4700	200	LOW	SOAP TEST
18	AIR TO ESD V1	1/2"	0.500	0.065	SS TUBING		4700	200	LOW	SOAP TEST
19	AIR TO COMPRESSOR SKID	1/2"	0.500	0.065	SS TUBING		4700	200	LOW	SOAP TEST
20	NOT USED	-	-	-	-	-	-	-	-	-
21	VALVE PANEL VENT	1"	1.000	0.120	SS TUBING		4700	4500	HIGH	SOAP TEST
22	STORAGE VENT	1"	1.000	0.120	SS TUBING		4700	4500	HIGH	SOAP TEST
23	DISPENSER VENT (MIN. 10-FEET ABOVE GRADE)	1"	1.000	0.120	SS TUBING		4700	4500	HIGH	SOAP TEST
24	HEADER FROM DISPENSER TO DISPENSING HOSE	3/4"	0.750	0.109	SS TUBING		5800	4500	HIGH	SOAP TEST
25	HEADER FROM DISPENSING HOSE TO DISPENSER VENT	3/8"	0.375	0.049	SS TUBING		4800	4500	HIGH	SOAP TEST
FC	AIR TO FISHER VALVE	1/2"	0.500	0.065	SS TUBING		4700	200	LOW	SOAP TEST

GUNNISON CNG VALVE SCHEDULE

VALVE #	VALVE TYPE	MODEL NUMBER
V-1	SVF 3" 150# Flg BALL VALVE W/ ACTUATOR	B41C6666AGRF10400000 & A2S-400-11-B
V-2	SVF 3" 150# Flg BALL VALVE	B41C6666AGRF10400000
V-3	3/4" SVF H7 6000 PSI SS BALL VALVE	H700666MDBSE00007LK00
V-4	1/2" 1000 PSI RATED SS BALL VALVE	BEV06666RTSE000500000
V-5	1" H7 SCREWED END X 1" 2500# FLANGE	H7 SE07 X RJ615B
V-6	3/4" H7 SCREWED END X 1" 2500# FLANGE	H7 SE07 X RJ610
V-7	3" PVC SCHEDULE 40 BALL VALVE	SUPPLIED BY CONTRACTOR
V-8	2" PVC SCHEDULE 40 BALL VALVE	SUPPLIED BY CONTRACTOR
V-9	3/8" 6000 PSI SWAGLOK NEEDLE VALVE SAE-6	PENDING
V-10	GV FISHER VALVE 1" 5000 #	PENDING
V-11	OASIS CHECK VALVE 1"	CV208
V-12	FISHER NPS 299H REGULATOR	NPS 2 FS133HP-AC1

GUNNISON CNG FLANGE SCHEDULE

NO.	SIZE	GASKET
1	3" 150# RF	FLEXITALLIC STYLE CGI SPIRAL WOUND FLEXICARB
2	4" 150# RTJ WITH ISOLATION KIT	INSULATING FLEXPRO WITH THERMICULITE FACING
3	4" 150# RF	FLEXITALLIC STYLE CGI SPIRAL WOUND FLEXICARB
4	1" 2500# RTJ WITH ISOLATION KIT	LAMONS DEFENDER ISOLATION KIT G10 TYPE E OR F DOUBLE WASHER SET
5	3/4" 2500# RTJ WITH ISOLATION KIT	LAMONS DEFENDER ISOLATION KIT G10 TYPE E OR F DOUBLE WASHER SET

MECHANICAL ABBREVIATIONS

ABBR.	DESCRIPTION
A/C	AIR CONDITIONING
AC	AIR COMPRESSOR
ADJ	ADJUSTABLE
AF	AIR FILTER
AFC	ABOVE FINISHED CEILING
AFF	ABOVE FINISHED FLOOR
AFG	ABOVE FINISHED GRADE
AP	ACCESS PANEL
APD	AIR PRESSURE DROP
ARI	AMERICAN REFRIGERANT INSTITUTE
ARCH	ARCHITECT (URAL)
AS	AIR SEPARATOR
ASME	AMERICAN SOCIETY OF MECHANICAL ENG.
ASTM	AMERICAN SOCIETY OF TESTING & MATERIALS
AVG	AVERAGE
AUX	AUXILIARY
B	BOILER
BFG	BELOW FINISHED GRADE
BLDG	BUILDING
BOS	BOTTOM OF STRUCTURE
CFM	CUBIC FEET PER MINUTE
CH	CHILLER/WATER COOLED CHILLER
CHP	CHILLED WATER PUMP
CIRC	CIRCULATING
CL	CENTER LINE
CLG	CEILING
CONN	CONNECTION
CONT	CONTINUOUS, CONTINUATION
COTG	CLEANOUT TO GRADE
CU	CONDENSING UNIT
DIA	DIAMETER
DIFF	DIFFUSER
DN	DOWN
DWS	DRAWING
DX	DIRECT EXPANSION
E	EXISTING
EA	EACH
EC	ELECTRICAL CONTRACTOR
ECC	ECCENTRIC
EFF	EFFICIENCY
ELEC	ELECTRICAL
ENGR	ENGINEER
EQ	EQUAL
EQUIP	EQUIPMENT
ESP	EXTERNAL STATIC PRESSURE
ET	EXPANSION TANK
ETR	EXISTING TO REMAIN
EVAP	EVAPORATOR
F	DEGREES FAHRENHEIT
FCO	FLOOR CLEANOUT
FLA	FULL LOAD AMPS
FLEX	FLEXIBLE
FT	FAN TERMINAL, OR FEET
GAL	GALLON
GC	GENERAL CONTRACTOR
GPH	GALLONS PER HOUR
GPM	GALLONS PER MINUTE
H	HEIGHT
HD	HEAD
HORIZ	HORIZONTAL
HP	HORSEPOWER, or HEAT PUMP
IC	INSIDE CLEAR
ID	INSIDE DIAMETER
IN	INCH
INSUL	INSULATION
INT	INTERNAL, or INTERIOR
IRH	INFRARED RADIANT HEATER
KW	KILOWATT
L	LENGTH
LB	POUNDS (WEIGHT)
LF	LINEAR FEET
LRA	LOCKED ROTAR AMPS
MAX	MAXIMUM
MC	MECHANICAL CONTRACTOR
MCA	MINIMUM CIRCUIT AMPS
MECH	MECHANICAL
MFR	MANUFACTURER
MIN	MINIMUM
MOCP	MAXIMUM OVER-CURRENT PROTECTION
MTD	MOUNTED
NC	NORMALLY CLOSED
NIC	NOT IN CONTRACT
NK	NECK
NO	NORMALLY OPEN
NO.	NUMBER
NTS	NOT TO SCALE
OC	ON CENTER
OD	OUTSIDE DIAMETER
P	PUMP
PC	PLUMBING CONTRACTOR
PD	PRESSURE DROP
PH	PHASE
PLBG	PLUMBING
PPM	PARTS PER MILLION
PSF	POUNDS PER SQUARE FOOT
PSI	POUNDS PER SQUARE INCH
PSIG	POUNDS PER SQUARE INCH GAUGE
QTY	QUANTITY
RCP	REFLECTED CEILING PLAN
RE	REFERENCE, or REFER
REQD	REQUIRED
REV	REVISION, or REVISE
RLA	RUNNING LOAD AMPS
RPM	REVOLUTIONS PER MINUTE
SCHED	SCHEDULE
SF	SQUARE FEET
SH	SENSIBLE HEAT
SIM	SIMILAR
SP	STATIC PRESSURE
SPEC	SPECIFICATION
SQ	SQUARE
STD	STANDARD
TC	TEMPERATURE CONTROL
TF	TRANSFER FAN
TSP	TOTAL STATIC PRESSURE
TSTAT	THERMOSTAT
TXV	THERMOSTATIC EXPANSION VALVE
TYP	TYPICAL
UCD	UNDERCUT DOOR
UL	UNDERWRITERS LABORATORIES, INC.
UNO	UNLESS NOTED OTHERWISE
VERT	VERTICAL
W	WIDTH, or WASTE
W/	WITH
W/O	WITHOUT
WC	WATER COLUMN
WCO	WALL CLEANOUT
WG	WATER GAUGE
XFER	TRANSFER

SYMBOLS AND LEGEND

- 3-WAY VALVE
- BALL VALVE
- CHECK VALVE
- NEEDLE VALVE
- SOLENOID VALVE
- PRESSURE RELIEF VALVE
- PRESSURE REGULATOR VALVE
- PRESSURE GAUGE (0-5000 psi)
- PRESSURE TRANSDUCER
- FLEX CONNECTION
- FLANGE
- FLANGE W/ ISOLATION KIT
- ISOLATION KIT
- SS 316 STAINLESS STEEL TUBE
- CS CARBON STEEL
- CONCENTRIC REDUCER
- COALESCING FILTER
- PURGE LINE
- SUCTION LINE
- AIR LINE

I:\2016\2016-235 gunnisonco\001-congestation\H-Dwgs\Mep\Working\GunnisonCNG-Mech.dwg Plotted: 4/13/2017 8:47 AM By: Ty Costello

COLORADO LICENSED
JOHN M. GRIFFITH
26072
PROFESSIONAL ENGINEER

SGM
118 West Sixth Street, Suite 200
Glenwood Springs, CO 81601
970.945.1004 www.sgm-inc.com

Gunnison County
CNG Fill Station / 508 Tomichi Ave,
Gunnison CO

#	Revision	Date	By
1	Trillium Final Review #1	04/12/2017	

Mechanical Legend & Schedules

Job No.	2016-235.001
Drawn by:	TC
Date:	02/16/2017
QC: JG	PE: JG
File:	GunnisonCNG-Mech

CNG INSTALLATION SPECIFICATIONS

1. THE CNG COMPRESSION, STORAGE, AND EMERGENCY SYSTEMS SHALL BE INSTALLED IN CONFORMANCE WITH NFPA 52, "VEHICULAR FUEL SYSTEMS CODE, 2013 EDITION".

2. SUBMITTALS: CONTRACTOR SHALL PROVIDE MANUFACTURER'S SHOP DRAWINGS TO THE ENGINEER / OWNER FOR APPROVAL PRIOR TO PURCHASE/INSTALLATION FOR THE FOLLOWING CNG COMPONENTS INSTALLED ON THIS PROJECT:
   2.1. CNG STORAGE CONTAINER
   2.2. PRESSURE RELIEF VALVES
   2.3. PRESSURE GAUGES
   2.4. PRESSURE REGULATORS
   2.5. HOSE & HOSE REGULATORS
   2.6. VALVES

3. CNG COMPRESSION AND STORAGE SHALL BE LOCATED AND CONDUCTED OUTDOORS IN COMPLIANCE WITH NFPA 52–2013, PARAGRAPH 7.4.2: MINIMUM OF 10 FEET FROM IMPORTANT BUILDINGS OR PROPERTY LINE, MINIMUM OF 10 FEET FROM PUBLIC STREET OR SIDEWALK, MINIMUM OF 50 FEET FROM RAILROAD TRACK, AND MINIMUM OF 20' FROM ANY ABOVEGROUND TANK CONTAINING FLAMMABLE OR COMBUSTIBLE LIQUIDS.

4. INDOOR FAST FILL DISPENSING SHALL COMPLY WITH NFPA 52–2013, PARAGRAPH 7.4.3.12: FAST–FILL FUELING INDOORS SHALL BE PERMITTED WHERE STORAGE AND COMPRESSION EQUIPMENT IS LOCATED OUTDOORS COMPLYING WITH 7.4.2.1 THROUGH 7.4.2.7. AND PARAGRAPH 7.4.3.12.1: WHERE ATTENDED FAST–FILL FUELING IS PERFORMED INDOORS, THE FOLLOWING SHALL BE INSTALLED;
   4.1. AN EMERGENCY MANUAL SHUTDOWN DEVICE SHALL BE INSTALLED AS REQUIRED BY 7.11.5,
   4.2. A GAS DETECTION SYSTEM EQUIPPED TO SOUND A LATCHED ALARM AND VISUALLY INDICATE WHEN A MAXIMUM OF ONE–FIFTH OF THE LOWER FLAMMABLE LIMIT IS REACHED SHALL BE INSTALLED.

5. PRESSURE RELIEF VALVES WILL BE INSTALLED IN ACCORDANCE WITH NFPA 52–2013, PARAGRAPH 7.6: PRESSURE RELIEF VALVES (PRV) SHALL DISCHARGE TO A LOCATION WHERE ESCAPING GAS DOES NOT IMPINGE ON BUILDING, OTHER EQUIPMENT, OR AREAS THAT ARE OCCUPIED BY THE PUBLIC, AND MUST DISCHARGE IN A VERTICAL POSITION. FULL PORT BLOCK VALVES CAN BE INSTALLED BETWEEN THE VESSEL AND THE PRV AS LONG AS THEY ARE LOCKED OPEN.

6. SIGNS WILL BE INSTALLED IN ACCORDANCE WITH NFPA 52–2013, PARAGRAPHS 7.14.12 – 7.14.12.3: "STOP MOTOR", NO SMOKING", "FLAMMABLE GAS", "NATURAL GAS VEHICLE FUEL CYLINDERS SHALL BE INSPECTED AT INTERVALS NOT EXCEEDING 3 YEARS TO ENSURE SAFE OPERATION OF THE VEHICLE", " NATURAL GAS FUEL CYLINDERS PAST THEIR END–OF–LIFE DATE SHALL NOT BE REFUELED AND SHALL BE REMOVED FROM SERVICE", WILL BE POSTED AT DISPENSERS. "NO SMOKING, FLAMMABLE GAS" SHALL BE INSTALLED AT COMPRESSOR AREA.

7. PIPING AND HOSES WILL BE INSTALLED IN ACCORDANCE WITH NFPA 52–2013, PARAGRAPH 7.9: PIPING WILL BE RUN AS DIRECTLY AS POSSIBLE, PIPING WILL BE SECURED, UNDERGROUND PIPING WILL BE 18 IN MINIMUM BELOW GRADE OR PROTECTED FROM DAMAGE BY MOVEMENT OF THE GROUND, PIPING WILL BE PROTECTED FROM CORROSIONS, AND THREADS WILL NOT BE USED UNDERGROUND.

8. PIPING CONNECTIONS WILL BE INSTALLED IN ACCORDANCE WITH NFPA 52–2013, PARAGRAPH 7.9.1.5: THREAD JOINT COMPOUND WILL BE IMPERVIOUS TO THE ACTION OF NATURAL GAS AND APPLIED TO ALL THREADS, THREADS SHOULD BE PREPARED PRIOR TO ASSEMBLY, JOINTS WILL BE LOCATED IN ACCESSIBLE LOCATIONS, JOINTS WILL BE MINIMIZED, VERTICAL VENT PIPES SHALL HAVE PROVISIONS FOR DRAINAGE, HOSES WILL ONLY BE USED FOR VEHICLE FUELING AND FLEX CONNECTIONS TO EQUIPMENT, AND FLEX CONNECTIONS WILL BE INSTALLED WHERE THEY CAN BE EASILY INSPECTED.

9. TESTING OF CNG SYSTEMS WILL BE IN ACCORDANCE WITH NFPA 52–2013, PARAGRAPH 7.10: PIPING, TUBING, HOSES, AND HOSE ASSEMBLIES SHALL BE LEAK TESTED AFTER ASSEMBLY TO PROVE THEM FREE FROM LEAKS AT A PRESSURE EQUAL TO AT LEAST THE NORMAL SERVICE PRESSURE OF THAT PORTION OF THE SYSTEM, AND PRESSURE RELIEF VALVES WILL BE TESTED AT LEAST EVERY 3 YEARS.

10. EMERGENCY SHUTDOWN EQUIPMENT WILL BE INSTALLED IN ACCORDANCE WITH NFPA 52–2013, PARAGRAPH 7.11: EACH ASME STORAGE VESSEL WILL HAVE A MANUAL BALL VALVE, EACH COMPRESSOR FILLING STORAGE WILL HAVE A CHECK VALVE ON IT'S DISCHARGE, MANUAL SHUTOFF VALVES ARE PROVIDED JUST PRIOR TO THE PIPING ENTERING THE FUELING BUILDING, EMERGENCY SHUTDOWN BUTTONS (ESD) WILL BE PROVIDED WITHIN 10 FT OF EACH DISPENSER AND NOT MORE THAN 25 FT FROM EACH DISPENSER, WHEN THE ESD IS ACTIVATED IT SHUTS OFF THE POWER AND FLOW OF GAS THROUGHOUT THE STATION, BREAKAWAY DEVICES WILL BE INSTALLED ON EACH DISPENSER HOSE, EMERGENCY SHUTDOWNS CAN ONLY BE RESET MANUALLY.

11. FAST–FILL STATION WILL BE INSTALLED IN ACCORDANCE WITH NFPA 52–2013, PARAGRAPH 7.11.8: AN AUTOMATIC VALVE WILL BE INSTALLED BETWEEN THE GAS STORAGE FACILITY AND THE DISPENSER FACILITY WHEN THE POWER TO THE STATION IS SHUT OFF OR AN EMERGENCY SHUTDOWN DEVICE IS ACTIVATED, A QUARTER TURN VALVE WILL BE INSTALLED JUST PRIOR TO THE DISPENSER BREAKAWAY DEVICE, AN AUTOMATIC VALVE WILL BE INSTALLED IN A DISPENSER THAT STOPS THE FLOW OF GAS WHEN THE STOP BUTTON IS PRESSED OR WHEN AN EMERGENCY SHUTDOWN DEVICE IS ACTIVATED.

12. PIPING
   12.1. ALL NEW PIPING SHALL BE FABRICATED AND TESTED PER ASTM/ANSI B31.3
   12.2. FOR UNDER 2" NOMINAL PIPE SIZE WITH MAXIMUM OPERATION PRESSURE GREATER THAN 15 PSIG, THE CONNECTIONS SHALL BE SOCKET WELDED, WITH TEN (10) PERCENT RANDOM DYE–PENETRANT EXAMINATION AND FIFTY (50) PERCENT RANDOM VISUAL EXAMINATION.
   12.3. FOR 2" AND OVER NOMINAL PIPE SIZE WITH MAXIMUM OPERATION PRESSURE GREATER THAN 15 PSIG, THE CONNECTIONS SHALL BE BUTT WELDED WITH TEN (10) PERCENT RANDOM–SAMPLE RADIOGRAPHIC EXAMINATION AND FIFTY (50) PERCENT RANDOM VISUAL EXAMINATION.
   12.4. CONTRACTOR SHALL CLEAN AND PROTECT PIPE INSIDE OF SECTIONS FROM DIRT AND LIQUIDS DURING FIELD FABRICATING, AND THOROUGHLY CLEAN OUT ALL PIPE SECTIONS PRIOR TO STARTUP, AND SHALL TAKE ALL MEANS NECESSARY TO ENSURE THAT PIPING CONTAMINANTS DO NOT DAMAGE CNG EQUIPMENT OR VEHICLES.
   12.5. SEE GAS AIR AND VENT PIPING AND TUBING INSTALLATION NOTES 17 & 18.

13. ALL THREADED FITTINGS WILL BE WRAPPED WITH TWO (2) WRAPS TEFLON TAPE.

14. ALL FLANGES & AND GASKETS (RAISED FACE & RTJ) TO BE CLEANED THEN COATED WITH ANTI– SEIZE PRIOR TO INSTALLING.

15. CONTRACTOR TO SUPPLY TWO (2) SPARE GASKETS FOR ALL SUPPLIED GASKETS.

ASME B16.11–2011
TABLE 7 CORRELATION OF FITTINGS CLASS WITH SCHEDULE NUMBER OR WALL DESIGNATION OF PIPE FOR CALCULATION OF RATINGS

CLASS DESIGNATION OF FITTING	TYPE OF FITTING	PIPE USED FOR RATING BASIS: SCHEDULE NO.	PIPE USED FOR RATING BASIS: WALL DESIGNATION
3000	SOCKET–WELDING	80	XS
6000	SOCKET–WELDING	160	...
9000	SOCKET–WELDING	...	XXS

CNG STATION EQUIPMENT CLEARANCE DISTANCES:

1. NFPA 52–7.4.2.2 A FACILITY IN WHICH CNG COMPRESSION, STORAGE, AND DISPENSING EQUIPMENT ARE SHELTERED BY WEATHER PROTECTION CONSTRUCTED IN ACCORDANCE WITH THE REQUIREMENTS OF THE BUILDING CODE AND BY A ROOF DESIGNED FOR VENTILATION AND DISPERSAL OF ESCAPED GAS SHALL BE CONSIDERED TO BE LOCATED OUTDOORS.

2. NFPA 52–7.4.2.3 COMPRESSION, STORAGE, AND DISPENSING EQUIPMENT LOCATED OUTDOORS SHALL BE ABOVE GROUND.

3. NFPA 52–7.4.2.3.1 COMPRESSION, STORAGE, AND DISPENSING EQUIPMENT LOCATED OUTDOORS SHALL NOT BE BENEATH ELECTRIC POWER LINES OR WHERE EXPOSED BY THEIR FAILURE.

4. NFPA 52–7.4.2.3.2 COMPRESSION, STORAGE, AND DISPENSING EQUIPMENT LOCATED OUTDOORS SHALL BE A MINIMUM OF 10 FT (3 M) FROM THE NEAREST IMPORTANT BUILDING OR LINE OF ADJOINING PROPERTY THAT IS ABLE TO BE BUILT UPON OR FROM ANY SOURCE OF IGNITION.

5. NFPA 52–7.4.2.4 COMPRESSION, STORAGE, AND DISPENSING EQUIPMENT LOCATED OUTDOORS SHALL BE NOT LESS THAN 10 FT (3 M) FROM THE NEAREST PUBLIC STREET OR SIDEWALK LINE AND AT LEAST 50 FT (15 M) FROM THE NEAREST RAIL OF ANY RAILROAD MAIN TRACK.

6. NFPA 52–7.4.2.5 A CLEAR SPACE OF AT LEAST 3 FT (1 M) SHALL BE PROVIDED FOR ACCESS TO ALL VALVES AND FITTINGS OF MULTIPLE GROUPS OF CONTAINERS.

7. NFPA 52–7.4.2.6 COMBUSTIBLE MATERIAL SHALL NOT BE PERMITTED WITHIN 10 FT (3 M) OF ANY STATIONARY CONTAINER.

8. NFPA 52–7.4.2.7 THE MINIMUM SEPARATION BETWEEN CONTAINERS AND ABOVEGROUND TANKS CONTAINING FLAMMABLE OR COMBUSTIBLE LIQUIDS SHALL BE 20 FT (6 M).

9. NFPA 52–7.4.2.8 DURING OUTDOOR FUELING OPERATIONS, THE POINT OF TRANSFER SHALL BE LOCATED AT LEAST 10 FT (3 M) FROM ANY IMPORTANT BUILDING, MOBILE HOME, PUBLIC SIDEWALK, HIGHWAY, STREET, OR ROAD AND AT LEAST 3 FT (1 M) FROM STORAGE CONTAINERS.

   A. NFPA 52–7.4.2.8.1 THE POINT OF TRANSFER SHALL BE PERMITTED TO BE LOCATED AT A LESSER DISTANCE FROM BUILDINGS OR WALLS CONSTRUCTED OF CONCRETE OR MASONRY MATERIALS OR OF OTHER MATERIAL HAVING AFIRE RESISTANCE RATING OF AT LEAST 2 HOURS, BUT AT LEAST 10 FT (3 M) FROM ANY BUILDING OPENINGS.

GAS, AIR, AND VENT PIPING AND TUBING INSTALLATION

1. COMPONENTS CONTAINING GAS SHALL BE CARBON STEEL OR STAINLESS STEEL AS INDICATED BELOW. THE VEHICLE FILLING HOSES ARE CONSIDERED TO BE THE ONLY EXCEPTION.

2. CARBON STEEL PIPING: ASME SA106B SEAMLESS PIPE OF APPROPRIATE DIAMETER AND SCHEDULE.

3. UNDERGROUND PIPING: ASME SA106B CARBON STEEL SEAMLESS PIPE OF APPROPRIATE DIAMETER AND SCHEDULE WITH FACTORY APPLIED COATING.

4. TUBING: ASME SA213 TP316 SEAMLESS, COLD DRAWN, BRIGHT ANNEALED STAINLESS STEEL. TP316L AND TP316N STAINLESS STEEL TUBING IS NOT ALLOWED. SURFACE HARDNESS SHALL NOT EXCEED ROCKWELL B90. DIAMETERS AND MINIMUM ALLOWABLE AVERAGE WALL THICKNESS AS FOLLOWS:
   4.1. 1 INCH O.D. X 0.134 INCH WALL
   4.2. 3/4 INCH O.D. X 0.109 INCH WALL
   4.3. 1/2 INCH O.D. X 0.065 INCH WALL
   4.4. 3/8 INCH O.D. X 0.049 INCH WALL
   4.5. 1/4 INCH O.D. X 0.035 INCH WALL

5. FERRULE TYPE COMPRESSION FITTING WILL NOT BE PERMITTED. ALL TUBING SHALL BE MECHANICALLY FLARED WITH A PARKER PARFLANGE MACHINE. THE CORRECT DIE AND PIN SETS WILL USED FOR EACH SIZE TUBING. BRAZED SLEEVES WILL NOT BE PERMIT WITHOUT APPROVAL FROM TRILLIUM. IF APPROVED, BRAZED SLEEVES WILL BE PARKER BRAND, SHALL BE OF THE SAME MATERIAL AS THE TUBING, AND HAVE A MINIMUM PRESSURE RATING EQUAL TO THAT OF THE TUBING. BRAZED FITTINGS WILL BE INSTALL ACCORDING TO MANUFACTURERS RECOMMENDATIONS.

6. THREAD–O–LETS, FLANGES, SWAGED NIPPLES, PLUGS AND BUSHINGS SHALL BE ASME SA105. BUTT WELD PIPE FITTING INCLUDING ELBOWS, RETURNS AND REDUCERS SHALL BE ASME SA234 WPB. BOLTS AND STUDS SHALL BE ASME SA193 GRADE B7. NUTS SHALL BE ASME SA194 GRADE 2H.

7. PIPE UNIONS SHALL ONLY BE USED ON VENT LINES.

8. RAISED FACE (RF) FLANGES SHALL BE USED ON ANSI CLASS 900 AND LOWER FLANGES. RING TYPE JOINT (RTJ) FLANGES SHALL BE USED ON ALL ANSI 1500 AND HIGHER FLANGES.

9. RAISED FACE AND RING TYPE JOINT WELD NECK FLANGES WILL BE INSTALLED WITH THE BORE SIZE SIMILAR TO THE PIPING IT IS FIXED TO.
   9.1. FOR SCHEDULE 40 PIPE, FLANGES WILL BE STANDARD BORE
   9.2. FOR SCHEDULE 80 PIPE, FLANGES WILL BE EXTRA HEAVY BORE
   9.3. FOR SCHEDULE 160 PIPE, FLANGES WILL BE SCH 160 BORE
   9.4. FOR SCHEDULE XXS PIPE, FLANGES WILL BE DOUBLE EXTRA HEAVY BORE

10. SCREWED PIPE AND FITTINGS SHALL BE USED ONLY WHERE A TRANSITION TO TUBING IS REQUIRED, OR FOR VENT LINES. THE USE OF STAINLESS STEEL THREADED FITTINGS IN COMBINATION WITH COMPRESSION FITTINGS SHALL BE MINIMIZED. SEAL WELDING OF THREADED FITTINGS IS PROHIBITED.

11. TUBE FITTINGS IN THE STATION WILL BE PARKER AND SHALL BE OF THE SAME MATERIAL AS THE TUBING. SWAGELOK PERMITTED ONLY ON 1/2" AIR LINES.

12. BENDS SHALL BE MINIMIZED WHEREVER POSSIBLE. PIPE BEND SHALL NOT BE PERMITTED. TUBING SHALL BE BENT USING BENDERS WHICH MINIMIZE RADIAL DISTORTION. THIS DISTORTION SHALL NOT EXCEED CODE REQUIREMENTS. MINIMUM TUBING BENDING RADIUS:
   12.1. 1/4" O.D. TUBING, 3/4" RADIUS MINIMUM
   12.2. 3/8" O.D. TUBING, 15/16" RADIUS MINIMUM
   12.3. 1/2" O.D. TUBING, 1–1/2" RADIUS MINIMUM
   12.4. 3/4" O.D. TUBING, 2–1/4" RADIUS MINIMUM
   12.5. 1" O.D. TUBING, 3–1/4" RADIUS MINIMUM

13. PIPE, AND TUBING SHALL BE CUT WITH A CUTTER INTENDED FOR THE APPLICATION. THE USE OF A HAND HACKSAW IS PROHIBITED (UNLESS A SWAGELOK TUBE VISE AND GUIDE IS USED). THE USE OF A POWER HACKSAW OR BANDSAW SHALL BE ALLOWED FOR PIPE AND TUBING 1–INCH AND LARGER ONLY, PROVIDED CUTS ARE SQUARE.

14. PIPING AND TUBING CUTS SHALL BE DEBURRED EXTERNALLY AND INTERNALLY.

15. TUBING SHALL BE FREE FROM SCRATCHES SUBSEQUENT TO CUTTING AND DEBURRING. A HYDRAULIC SWAGER SHALL BE USED FOR 3/4" AND LARGER TUBING.

16. PIPING PENETRATIONS THROUGH CONCRETE OR CMU WALLS WILL BE INSTALLED WITH SLEEVES THE FULL DEPTH, AND SEALED TO THE SLEEVE WITH PIPESEAL PENETRATION SEAL OR APPROVED EQUAL.

PIPE WELDING AND FITTING PRACTICES

1. PROVIDE WELDING MATERIALS, EQUIPMENT, TOOLS AND SUPPLIES OF A SIZE, GRADE, AND QUALITY APPROVED BY THE ENGINEER.

2. END PREPARATION AND FIT UP: END PREPARATION OR BEVELING SHALL BE MADE BY HAND FILING, MACHINE TOOL OR FLAME CUTTING DEVICE. CUT SURFACES SHALL BE SMOOTH AND REGULAR. FREE HAND TORCH BEVELING SHALL NOT BE PERMITTED UNLESS PREVIOUSLY AUTHORIZED ON A CASE–BYCASE BASIS BY THE ENGINEER. RUST,SCALE, MILL SLAG, PRIMER, MOISTURE, OIL OR OTHER MATERIAL WHICH MAY BE DETRIMENTAL TO THE FINISHED WELD SHALL BE COMPLETELY REMOVED FROM THE WELD AREA. THE ENDS OF PIPE, FITTINGS, VALVES AND THE LIKE, SHALL BE CLEANED BEYOND THE BEVELED EDGES AT LEAST 2 INCHES BOTH INTERNALLY AND EXTERNALLY TO ASSURE NO FOREIGN MATERIAL ENTERS THE WELD PUDDLE.

3. LINE UP CLAMPS: THE ABUTTING EDGES OF WELDMENTS SHALL BE HELD IN ALIGNMENT BY AN APPROVED TYPE OF LINE UP CLAMP WHERE PRACTICAL. WHEN WELDING FITTING TO FITTING WHERE AN APPROVED TYPE OF LINE UP CLAMP IS NOT PRACTICAL, EACH FITTING SHALL BE PROPERLY SUPPORTED SO AS TO MINIMIZE MOVEMENT AND STRAIN DURING WELDING. WHEN USING AN EXTERNAL LINE UP CLAMP, THE CLAMP SHALL NOT BE REMOVED UNTIL THE STRINGER BEAD SEGMENTS HAVE BEEN UNIFORMLY SPACED AROUND THE CIRCUMFERENCE OF THE PIPE AND SHALL HAVE AN ACCUMULATIVE LENGTH OF AT LEAST 50 PERCENT OF THE PIPE CIRCUMFERENCE.

4. ALIGNMENT: THE ALIGNMENT OF THE ABUTTING ENDS SHALL BE SUCH AS TO MINIMIZE THE OFFSET BETWEEN SURFACES. FOR PIPE OF THE SAME NOMINAL WALL THICKNESS, THE OFFSET SHALL NOT EXCEED 1/16 INCH. ANY GREATER OFFSET, PROVIDED IT IS CAUSED BY DIMENSIONAL VARIATIONS, SHALL BE EQUALLY DISTRIBUTED AROUND THE CIRCUMFERENCE OF THE PIPE OR FITTING.

5. ELECTRODE PROTECTION: WELDING ELECTRODES SHALL BE KEPT DRY AND PROTECTED FROM ANY MECHANICAL DAMAGE OR DETERIORATION. THEY SHALL NOT BE USED IF FOUND OR SUSPECTED TO BE DEFECTIVE.

6. BURNED OR DEFECTIVE ELECTRODES SHALL NOT BE DROPPED ON THE GROUND OR IN THE RACEWAY, BUT SHALL BE DISCARDED IN A PROPER CONTAINER.

7. LOW HYDROGEN ELECTRODES COME IN A HERMETICALLY SEALED CONTAINER. WHEN A NEW CONTAINER IS OPENED, THE ELECTRODES SHALL BE PLACED IN A HEATING OVEN AND SHALL BE HEATED TO 500 DEG F FOR A PERIOD OF TWO HOURS.

8. AFTER A WELD HAS BEEN STARTED, NO MOVEMENT (OTHER THAN ROLLING ON A FIXTURE) OF THE PIPING SHALL BE PERMITTED UNTIL AFTER THE WELD HAS BEEN COMPLETED.

9. THE "HOT PASS" OR SECOND BEAD SHALL BE COMMENCED AS SOON AS POSSIBLE AFTER COMPLETION OF THE ROOT BEAD. A COMPLETED WELD SHALL CONSIST OF AT LEAST THREE PASSES. UNDER NO CONDITION SHALL A WELD OF ONLY TWO PASSES BE ACCEPTABLE IN MANUAL SHIELDED METAL ARC WELDING. EACH SUCCESSIVE PASS SHALL BE STARTED AT 120 DEGREES SEPARATION FROM THE PREVIOUS TWO START POINTS.

10. DIRT, SCALE AND SLAG SHALL BE REMOVED FROM EACH BEAD AND GROOVE, BETWEEN PASSES, AND AFTER THE WELD HAS BEEN COMPLETED WITH EITHER HAND OR POWER TOOLS.

11. THE COVER OF CAP PASS SHALL BE RAISED A MAXIMUM OF 1/16 INCH ABOVE THE PIPE WALL, WITH A WIDTH SUFFICIENT ENOUGH TO COVER AT LEAST 1/16 INCH ON EACH SIDE OF THE WELD GROOVE. A CONCAVE CAP IS NOT ACCEPTABLE.

12. WELDS MUST BE SPACED A MINIMUM OF ONE AND A HALF NOMINAL PIPE DIAMETERS AWAY FROM ANY ADJACENT WELD UNLESS OTHERWISE APPROVED BY THE ENGINEER.

13. EXPOSED PIPE JOINTS: PIPE JOINTS FOR THE BURIED PIPE SHALL REMAIN EXPOSED UNTIL INSPECTED. WHERE THE EXPOSED PIPE IS IN AN AREA WHERE VEHICLES NEED TO CROSS, THE INSPECTION SHALL BE EXPEDITED TO MINIMIZE DISRUPTION IN TRAFFIC FLOW

WELDED PIPING PRESSURE TESTING

1. GAS PIPING SHALL BE PRESSURE TESTED TO A VALUE OF 1.1X (PNEUMATIC), THE RELIEF VALVE SETTING OR AS REQUIRED BY THE OWNER, TRILLIUM, OR THE AUTHORITY HAVING JURISDICTION. EXTREME CARE SHALL BE USED DUE TO THE INHERENT RISK OF A CATASTROPHIC FAILURE WHICH COULD CAUSE SERIOUS INJURY. NONESSENTIAL PERSONNEL SHALL LEAVE AND PROTECTION FROM INJURY SHALL BE PROVIDED FOR THOSE LEFT.

2. PRESSURE TEST SHALL BE WITNESSED BY TRILLIUM, AND THE AUTHORITY HAVING JURISDICTION TO CONFIRM COMPLIANCE WITH SPECIFIED REQUIREMENTS.

3. TIE–INS: PIPING OR TUBING TIE–INS SHALL BE REMOVED FROM THE SYSTEM AND PRESSURE TESTED IN ACCORDANCE WITH THE ABOVE REQUIREMENTS. AFTER REINSTALLATION, THE TIE–INS WILL BE LEAK TESTED AT THE WORKING PRESSURE OF THE SYSTEM.

FLEXIBLE CONNECTIONS

1. ALL FLEXIBLE CONNECTIONS ARE TO BE STAINLESS STEEL CORRUGATED METAL HOSE WITH A STAINLESS STEEL DOUBLE BRAID.

2. ALL FLEXIBLE CONNECTIONS WILL BE SUPPLIED WITH A PERMANENTLY AFFIXED TAG STAMPED WITH THE MANUFACTURER NAME, MANUFACTURED DATE, AND MAWP PRESSURE RATING.

3. THE MAWP PRESSURE RATING FOR THE FLEXIBLE CONNECTION SHALL BE A MINIMUM OF 200 PSI. OR 150% OF MAXIMUM MSA OUT LET PRESSURE, WHICH EVER IS GREATER.

PURGING AND PRESSURIZING:

1. PURGING AND PRESSURIZING SHALL BE PERFORMED BY THE CONTRACTOR AND WITNESSED BY TRILLIUM.

2. BEFORE PRESSURIZING WITH NATURAL GAS COMMENCES, THE ESD SYSTEM SHALL BE TESTED AND FULLY OPERATIONAL.

3. NATURAL GAS SHALL NOT BE INTRODUCED INTO THE SYSTEM WITHOUT PRIOR APPROVAL OF THE LOCAL GAS UTILITY AND THE EXPRESSED AUTHORIZATION OF THE TRILLIUM. AIR SHALL BE PURGED FROM THE ENTIRE SYSTEM TO THE SATISFACTION OF TRILLIUM PRIOR TO PRESSURIZING THE SYSTEM.

4. BEFORE NATURAL GAS IS INTRODUCED INTO ANY PIPING SYSTEM, FABRICATION, TESTING, AND WORK REQUIRING FLAME OR SPARKING DEVICES SHALL BE COMPLETE. AFTER NATURAL GAS HAS BEEN INTRODUCED, WELDING OR OTHER WORK WHICH COULD IGNITE NATURAL GAS VAPORS SHALL BE PERFORMED OUTSIDE THE HAZARDOUS AREA OR UNDER A "HOTWORK" PERMIT AND UNDER THE WRITTEN AUTHORIZATION BY TRILLIUM.

PIPING AND TUBING LEAK TEST:

1. SUBSEQUENT TO FINAL FIELD INSTALLATION AND PRESSURE TEST, COMPLETED PIPING WITH VALVE IN PLACE SHALL BE LEAK TESTED BEFORE BEING PLACED IN OPERATION TO ENSURE THAT IT DOES NOT LEAK.

2. THE PIPING AND TUBING SHALL BE PRESSURIZED WITH NATURAL GAS TO ITS NORMAL OPERATING PRESSURE (4200 PSIG DOWNSTREAM OF THE CNG COMPRESSORS) AND TESTED WITH A SUITABLE LIQUID LEAK DETECTOR SUCH AS "SNOOP" (BY SWAGELOK COMPANY).

3. THE FOLLOWING LOCATIONS SHALL BE TESTED:
   3.1. FLANGED JOINTS
   3.2. THREADED JOINTS
   3.3. TUBE JOINTS
   3.4. ACCESSIBLE BUTT JOINTS

JEEP TESTING:

1. NEW UNDERGROUND PIPE COATING WILL BE HOLIDAY (JEEP) TESTED PRIOR TO PLACEMENT IN SOILS.

2. ANY DEFECTS IN PIPE COATING WILL BE REPAIRED AND RETESTED.

3. CONTRACTOR TO SUBMIT REPORT OF ALL DEFECTS AND SUBSEQUENT REPAIRS.

GENERAL NOTES

1. IF DISCREPANCIES FROM DIMENSION TO EXISTING SITE CONDITION ARE FOUND "MATCHING EXISTING" SHALL SUPERCEDE. CONTRACTOR TO NOTIFY TRILLIUM OF SUCH DISCREPANCIES AT THE EARLIEST CONVENIENCE.

i:\2016\2016–235–gunnisonco\001–cngstation\H–Dwgs\Mep\Working\GunnisonCNG–Mech.dwg Plotted: 4/13/2017 8:47 AM By: Ty Costello

COLORADO LICENSED JEFF M. GREBE 26072 PROFESSIONAL ENGINEER

SGM
118 West Sixth Street, Suite 200
Glenwood Springs, CO 81601
970.945.1004 www.sgm-inc.com

Gunnison County
CNG Fill Station / 508 Tomichi Ave,
Gunnison CO

#	Revision	Date	By
1	Trillium Final Review #1	04/12/2017	

Piping Specifications

Job No. 2016-235.001
Drawn by: TC
Date: 02/16/2017
QC: JG PE: JG
File: GunnisonCNG-Mech

M-12 Of 34