# AGENDA ITEM or FINAL CONTRACT REVIEW SUBMITTAL FORM

**AgendaTitle:**
Consent 11 - Grant Application; State Historical Fund; Phase II – Interior and Exterior Rehabilitation of the Ohio City Town Hall; Projected Project Cost $119,734.37

**Action Requested:** Motion

**Parties to the Agreement:**

**Term Begins:** **Term Ends:** **Grant Contract #:**

**Summary:**
This is a request for approval of pursuing another grant through the State Historical Fund for Phase II- Interior & Exterior Rehabilitation of the Ohio City Town Hall and for authorization of the County Manager,Attached please find draft plans and opinion of cost.

**Fiscal Impact:** $25,000 - 30,000 (approximately)

**Submitted by:** Office of the County Attorney **Submitter's Email Address:** rmagruder@gunnisoncounty.org

**Finance Review:** (●) Required ( ) Not Required

Comments:

This is not the grant application at this time, it is the preliminary plans for the Phase ll for the upcoming application. The fiscal impact is an approximation based on early computations and will be finalized when the application is re-routed for approval. The match, once determined, can come from unappropriated fund balance in the Sale Tax Fund.

Reviewed by: GUNCOUNTY1\lNienhueser Discharge Date: 3/11/2015

**County Attorney Review:** ( ) Required (●) Not Required

Comments:

Reviewed by: Discharge Date: Certificate of Insurance Required

Yes ( ) No ( )

**County Manager Review:**

Comments:

Reviewed by: GUNCOUNTY1\mbirnie Discharge Date: 3/12/2015

(●) Consent Agenda ( ) Regular Agenda ( ) Worksession Time Allotted:

Agenda Date: 3/17/2015 Follow Up Agenda Date:

*Revised April 2013*

# CONSTRUCTION COST OPINION

| | | | | | |
|---|---|---|---|---|---|
| **OHIO CITY TOWN HALL - PHASE 2** | | | | **DATE** | 3/2/2015 |
| 8503 County Road 76 | | | | **REVISED** | |
| Ohio City, Colorado 81237 | | | | | |
| | | | | | |
| *** Note Italics Indicates Revised Figures* | | | | | |
| | | | | | |
| **ITEM** | **DESCRIPTION** | **QNTY** | **UNIT** | **UNIT COST** | **TOTAL COST** |
| **PHASE 2 CONSTRUCTION** | | | | | |
| **T2.1** | **WINDOW AND DOOR REHABILITATION** | | | | |
| | Temporary Side Door | 1 | EA | $60.00 | $60.00 |
| | Rehabilitate Side Door | 1 | EA | $2,200.00 | $2,200.00 |
| | New Side Door Transom | 1 | EA | $750.00 | $750.00 |
| | Custom Front Door | 1 | EA | $2,600.00 | $2,600.00 |
| | Hardware & Thresholds | 1 | Lump | $1,800.00 | $1,800.00 |
| | Rebuilt Transom Window | 1 | EA | $1,200.00 | $1,200.00 |
| | Rebuild Transom Panel | 1 | EA | $850.00 | $850.00 |
| | Rebuild Jamb, Head & Trim | 57 | LF | $18.00 | $1,026.00 |
| | Install Interior Trim | 57 | LF | $5.00 | $285.00 |
| | Flashing & Sealants | 1 | Lump | $270.00 | $270.00 |
| | Finishes | 1 | Lump | $120.00 | $120.00 |
| | Address Numbers | 1 | Lump | $340.00 | $340.00 |
| | Trash & Clean Up | 6 | Hrs | $45.00 | $270.00 |
| | Custom Windows | 2 | EA | $850.00 | $1,700.00 |
| | Frame Head, Jamb, & Sill | 8 | Hrs | $45.00 | $360.00 |
| | Wood Trim, Exterior | 9 | LF | $25.00 | $225.00 |
| | Wood Trim, Interior | 9 | LF | $35.00 | $315.00 |
| | Flashing & Sealants | 1 | Lump | $360.00 | $360.00 |
| | Finishes | 2 | EA | $120.00 | $240.00 |
| | Trash & Clean Up | 6 | Hrs | $45.00 | $270.00 |
| | *WINDOW AND DOOR REHABILITATION SUB-TOTAL* | | | | $15,241.00 |
| | | | | | |
| **T2.2** | **WOOD FLOOR REHABILITATION** | | | | |
| | Remove Hardwood Floor | 64 | Hrs | $50.00 | $3,200.00 |
| | New Sub-Floor | 1379 | SF | $4.50 | $6,205.50 |
| | Install New Floor & Patches | 385 | SF | $15.00 | $5,775.00 |
| | Refinish Entire Floor | 1379 | SF | $4.50 | $6,205.50 |
| | Finishes on Entire Floor | 1379 | SF | $6.50 | $1,724.00 |
| | Final Cleaning | 1 | Lump | $600.00 | $600.00 |
| | *Stage Steps* | | | | |
| | Remove Existing Steps | 4 | Hrs | $45.00 | $180.00 |
| | New Steps | 1 | Lump | $2,050.00 | $2,050.00 |
| | New Metal Handrail | 4 | LF | $65.00 | $260.00 |

| ITEM | DESCRIPTION | QNTY | UNIT | UNIT COST | TOTAL COST |
|---|---|---|---|---|---|
| | *Stage Edge Trim* | | | | |
| | Tactile Strip | 24 | LF | $8.50 | $204.00 |
| | Edge Trim & Finish | 24 | LF | $12.00 | $288.00 |
| | *Stove Floor & Wall Tile* | | | | |
| | Lift/Move Stove | 8 | Hrs | $45.00 | $360.00 |
| | Backer Board | 65 | SF | $2.50 | $163.00 |
| | Tile & Grout | 65 | SF | $16.00 | $1,040.00 |
| | Transition Strip | 35 | LF | $8.00 | $280.00 |
| | Clean Bead Board Wall | 2200 | SF | $1.25 | $2,750.00 |
| | *WOOD FLOOR REHABILITATION SUB-TOTAL* | | | | $31,285.00 |
| | | | | | |
| **T2.3** | **METAL SIDING REHABILITATION** | | | | |
| | Remove Existing Metal Siding | 64 | Hrs | $45.00 | $2,880.00 |
| | Roof Drip Edge | 120 | LF | $4.00 | $480.00 |
| | New Frieze Panel | 120 | LF | $32.00 | $3,840.00 |
| | New Gable End Trim | 72 | LF | $15.00 | $1,080.00 |
| | Misc Wood Trim | 40 | LF | $9.00 | $360.00 |
| | New Belly Band | 120 | LF | $4.00 | $480.00 |
| | Cora-Vent Strips | 120 | LF | $3.50 | $420.00 |
| | Flashing | 120 | LF | $3.50 | $420.00 |
| | Clean & Condition Panels | 32 | Hrs | $45.00 | $1,440.00 |
| | Reinstall Metal Panels | 80 | Hrs | $45.00 | $3,600.00 |
| | New Metal Corner Trim | 20 | LF | $45.00 | $900.00 |
| | Install Metal Corner Trim | 16 | Hrs | $45.00 | $720.00 |
| | Cleaning | 1 | Lump | $500.00 | $500.00 |
| | *METAL SIDING REHABILITATION - SUB TOTAL* | | | | $17,120.00 |
| | | | | | |
| **T2.4** | **METAL CEILING REHABILITATION** | | | | |
| | * New Tin Ceiling Panels | 130 | SF | $30.00 | $3,900.00 |
| | * New Molding Strips | 35 | LF | $35.00 | $1,225.00 |
| | * New Filler Panels | 24 | SF | $5.00 | $120.00 |
| | * New Crown Molding | 36 | LF | $55.00 | $1,980.00 |
| | Administrative Costs | 16 | Hrs | $60.00 | $960.00 |
| | Remove 25% of Ceiling Panels | 32 | Hrs | $45.00 | $1,440.00 |
| | Install New Panels | 80 | Hrs | $45.00 | $3,600.00 |
| | Misc Metal Fabrications | 1 | Est. | $1,600.00 | $1,600.00 |
| | Cleaning | 1 | Lump | $600.00 | $600.00 |
| | *METAL CEILING REHABILITATION SUB-TOTAL* | | | | $15,425.00 |
| | ** Replicated historic pieces from WF Norman Corp.* | | | | |
| | | | | | |
| | | | | | |

| ITEM | DESCRIPTION | QNTY | UNIT | UNIT COST | TOTAL COST |
|---|---|---|---|---|---|
| | Direct Cost of Construction Sub-Total | Above | | | $79,071.00 |
| | General Conditions | 15% | Est. | | $11,860.65 |
| | Contractor Fee | 15% | Est. | | $11,860.65 |
| | Project Contingency | 10% | Lump | | $7,907.10 |
| | A/E Construction Administration | 7% | Est. | | $5,534.97 |
| | Permits & Inspections | 1 | Est. | | $3,500.00 |
| | | | | | |
| **PROJECTED COST OPINION - PHASE 2** | | | | | **$119,734.37** |
| | | | | | |
| | | | | | |

## General Notes

1.) DO NOT SCALE DRAWINGS. REPORT ANY DIMENSIONAL DISCREPANCIES TO THE ARCHITECT.

2.) ALL WORK SHALL COMPLY WITH THE 2009 INTERNATIONAL BUILDING CODE, 2009 INTERNATION ENERGY CONSERVATION CODE, GUNNISON COUNTY LAND USE RESOLUTION, AND ANY OTHER APPLICABLE STATE AND LOCAL CODES AND REGULATIONS.

3.) FIELD VERIFY EXISTING CONDITIONS AND DIMENSIONS PRIOR TO CONSTRUCTION.

4.) DIMENSIONS ARE TO FACE OF STUD, FACE OF CONCRETE, CENTERLINE OF TIMBER UNLESS NOTED OTHERWISE.

5.) REFERENCE ELEVATIONS AND BUILDING SECTIONS FOR ALL EXTERIOR WALL FINISHES.

6.) FINISH FLOOR ELEVATIONS ARE SHOWN AS AN ARCHITECTURAL DATUM. REFERENCE SITE PLAN FOR ACTUAL ELEVATION REFERENCE.

7.) COORDINATE ALL ELECTRICAL AND MECHANICAL WIRING, PIPING, DUCTS, ETC TO FIT WITHIN CEILINGS, WALLS, AND DEDICATED CHASES.

8.) PROVIDE ALL NECESSARY BLOCKING IN STUD WALLS AND CEILINGS. LOCATIONS INCLUDE BUT ARE NOT LIMITED TO: TOILET ACCESSORIES, CEILING AND WALL MOUNTED ELECTRICAL FIXTURES, SHELVES, CABINETRY AND CASEWORK, BUILT-INS, DRAPERY RODS, COUNTER TOPS, AND FALSE BEAMS.

9.) COORDINATION OF BUILDING INSPECTIONS IS THE RESPONSIBILTY OF THE CONTRACTOR. ANY SPECIAL INSPECTIONS REQUIRED BY THE BUILDING INSPECTOR ARE THE RESPONSIBILITY OF THE OWNER.

10.) ONE COPY OF STAMPED CONSTRUCTION DOCUMENTS APPROVED BY THE BUILDING OFFICIAL SHALL BE KEPT AT THE SITE OF WORK FOR INSPECTION BY THE AUTHORITIES HAVING JURISDICTION AT ALL TIMES.

11.) DEFERRED SUBMITTALS INCLUDING , MECHANICAL AND ELECTRICAL DRAWINGS SHALL BE SUBMITTED TO THE BUILDING DEPARTMENT FOR APPROVAL PRIOR TO CONSTRUCTION.

12.) STRUCTURE SHALL NOT BE OCCUPIED UNTIL A CERTIFICATE OF OCCUPANCY HAS BEEN ISSUED BY THE BUILDING INSPECTOR.

## Graphic Symbols

- DOOR NUMBER - REFER TO DOOR SCHEDULE FOR DOOR INFORMATION, DETAILS, FIRE RATING, AND HARDWARE TYPE
- WINDOWS & LOUVERS - REFERENCE WINDOW SCHEDULE LABELED DIMENSIONS IN WIDTH/HEIGHT IN FEET/INCHES "2040" EQUALS 2'-0" WIDE, 4'-0" TALL FRAME OPENING
- DETAILS, SECTIONS, & ENLARGED PLANS
- ASSEMBLY TYPES - FLOOR, WALL, CEILING, AND ROOF TYPES
- KEYNOTES - REFERENCE APPLICABLE SCHEDULES AND TABLES
- REVISION TAG - REFER TO ISSUE DATE AND REVISION NUMBER IN SHEET OR DETAIL TITLE BLOCK FOR MOST RECENT REVISION

## Area Map

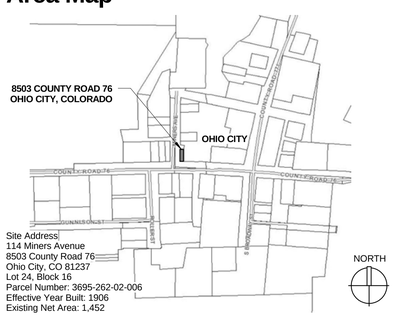


Site Address
114 Miners Avenue
8503 County Road 76
Ohio City, CO 81237
Lot 24, Block 16
Parcel Number: 3695-262-02-006
Effective Year Built: 1906
Existing Net Area: 1,452

## Location Map

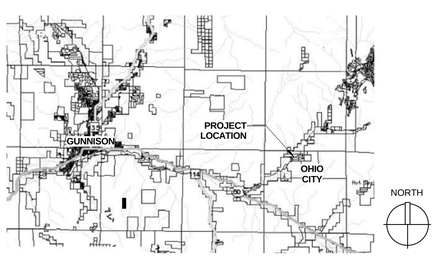


## Rehabilitation Notes

**The Secretary of the Interior's Standards for the Treatment of Historic Properties**

**Standards for Rehabilitation**

1. A property will be used as it was historically or be given a new use that requires minimal change to its distinctive materials, features, spaces, and spatial relationships.

2. The historic character of a property will be retained and preserved. The removal of distinctive materials or alteration of features, spaces, and spatial relationships that characterize a property will be avoided.

3. Each property will be recognized as a physical record of its time, place, and use. Changes that create a false sense of historical development, such as adding conjectural features or elements from other historic properties, will not be undertaken.

4. Changes to a property that have acquired historic significance in their own right will be retained and preserved.

5. Distinctive materials, features, finishes, and construction techniques or examples of craftsmanship that characterize a property will be preserved.

6. Deteriorated historic features will be repaired rather than replaced. Where the severity of deterioration requires replacement of a distinctive feature, the new feature will match the old in design, color, texture, and, where possible, materials. Replacement of missing features will be substantiated by documentary and physical evidence.

7. Chemical or physical treatments, if appropriate, will be undertaken using the gentlest means possible. Treatments that cause damage to historic materials will not be used.

8. Archeological resources will be protected and preserved in place. If such resources must be disturbed, mitigation measures will be undertaken.

9. New additions, exterior alterations, or related new construction will not destroy historic materials, features, and spatial relationships that characterize the property. The new work will be differentiated from the old and will be compatible with the historic materials, features, size, scale and proportion, and massing to protect the integrity of the property and its environment.

10. New additions and adjacent or related new construction will be undertaken in such a manner that, if removed in the future, the essential form and integrity of the historic property and its environment would be unimpaired.

**Standards for Reconstruction**

1. Reconstruction will be used to depict vanished or non-surviving portions of a property when documentary and physical evidence is available to permit accurate reconstruction with minimal conjecture, and such reconstruction is essential to the public understanding of the property.

2. Reconstruction of a landscape, building, structure, or object in its historic location will be preceded by a thorough archeological investigation to identify and evaluate those features and artifacts which are essential to an accurate reconstruction. If such resources must be disturbed, mitigation measures will be undertaken.

3. Reconstruction will include measures to preserve any remaining historic materials, features, and spatial relationships.

4. Reconstruction will be based on the accurate duplication of historic features and elements substantiated by documentary or physical evidence rather than on conjectural designs or the availability of different features from other historic properties. A reconstructed property will re-create the appearance of the non-surviving historic property in materials, design, color, and texture.

5. A reconstruction will be clearly identified as a contemporary re-creation.

6. Designs that were never executed historically will not be constructed.

## Project Phases

The Ohio City Town Hall Foundation Stabilization and Rehabilitation Project will be divided into phases to accommodate anticipated funding streams. The following phases may be bid individually, collectively or further subdivided at the descretion of Gunnison County Public Works Department.

**PHASE 2**

T2.1 - Window Replacement. Replace existing windows with wood awning windows. Recommend Marvin Authentic Divided Light Wood Windows, interior and exterior to be field finished. Flash window heads. Provide interior and exterior wood trim.

T2.2 - Door Reconstruction and Rehabilitation. Rehabilitate existing secondary exit. Repair and replace jamb and threshold. Reverse swing on existing door to provide for egress. Add panic hardware. Recreate entry door based on historic photo; provide cross bar panic hardware. Rebuild door frame, head transoms, jamb, and sill to accommodate new door.

T2.3 - Wood Floor Rehabilitation. Carefully remove existing hardwood floor. Remove all nails from the backside of boards and prep for reinstallation. Remove existing stage. Install new 5/8" Floor Sheating. Rebuild stage floor and stairs. Reinstall hardwood floor boards; add custom 2-1/4" douglas fir hardwood floor to match existing. Rehabilitate to remove any finishes and refinish entire floor. Install new non-combustible floor under and behind wood stove. Provide new stage step and new handrails. Repair and provide new finish trim along stage edge.

T2.4 - Metal Siding Rehabilitation. Remove historic pressed metal panel siding and pressed metal corner trim. Install conceiled crawlspace vents in new belly band. Install 30# felt paper on side walls. Using existing panels, reinstall siding and corner trim over waterproof barrier. Correct door and window flashing installation. Construct enclosed wood fascia and soffit to discourage bird nesting.

T2.5 - Metal Ceiling Tile Rehabilitation. Utilizing replica tiles, install additional ceiling pieces to infill missing or damaged ceiling tiles, molding, filler, and crown molding.


BEN WHITE
ARCHITECTURE
148 ELCHO AVE. #3
CRESTED BUTTE
COLORADO, 81224
TEL/FAX 970.349.5378
ben@benwhitearchitecture.com


PHASE II - INTERIOR & EXTERIOR
REHABILITATION FOR THE

# OHIO CITY TOWN HALL

## OHIO CITY, COLORADO

## GCHPC REVIEW SET

## MARCH 2, 2015

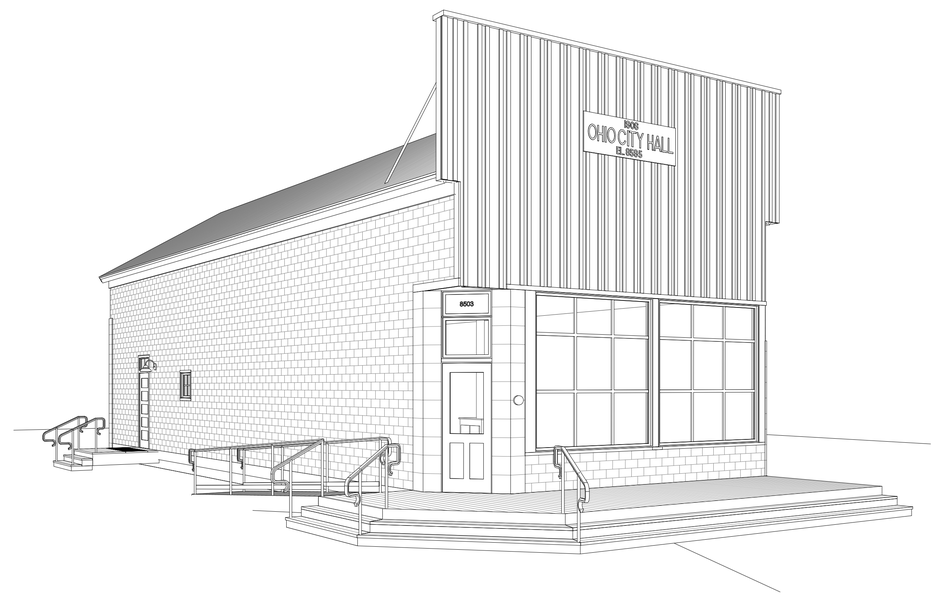


** VIEW OF SOUTHWEST CORNER, PROPOSED CONSTRUCTION*

## Contract Info


**Owner**
Gunnison County
Public Works Department
195 Basin Park Drive
Gunnison, CO 81230
970-641-0004

**Owner's Representative**
Rachel Magruder
Gunnison County Attorney's Office
200 East Virginia Avenue
Gunnison, CO 81230
970-641-7616
rmagruder@gunnisoncounty.org

**Architect**
Benjamin White, AIA
Ben White Architecture
148 Elcho Ave. #3
Crested Butte, CO 81224
970-349-5378
ben@benwhitearchitecture.com

**Archaeologist**
Jacki Mullen, M.A., RPA
Alpine Archaeological Consultants, Inc.
900 South Townsend Avenue
Montrose, CO 81401
970-249-6761
jacki_mullen@alpinearchaeology.com


## Sheet Index - 2


| | |
|---|---|
| A0.1 | COVER SHEET |
| A0.2 | SITE PLAN & CODE REVIEW |
| A2.1 | EXISTING ELEVATIONS |
| T2.1A | WINDOW & DOOR REHABILITATION |
| T2.1B | WINDOW & DOOR DETAILS |
| T2.2 | WOOD FLOOR REHABILITATION |
| T2.3A | EXTERIOR REHABILITATION |
| T2.3B | EXTERIOR REHABILITATION DETAILS |
| T2.4 | METAL CEILING TILE REHABILITATION |


PHASE II - INTERIOR & EXTERIOR
REHABILITATION FOR THE
OHIO CITY TOWN HALL
8503 COUNTY ROAD 76
OHIO CITY, COLORADO 81237

ISSUE LOG

| | | |
|---|---|---|
| A | 3/2/15 | GCHCP REVIEW SET |

COVER SHEET

PROJECT NO.: 120227

PROJECT DATE: 4/17/12

SHEET NUMBER:

A0.1

3/1/2015 9:56:56 PM

# Code Summary

**APPLICABLE BUILDING CODES**

2009 INTERNATIONAL BUILDING CODE (IBC)
2009 INTERNATIONAL EXISTING BUILDING CODE (IEBC)
2011 NATIONAL ELECTRICAL CODE (NEC)
2009 INTERNATIONAL MECHANICAL CODE (IMC)
SECRETARY OF THE INTERIOR STANDARDS FOR THE TREATMENT OF HISTORIC PROPERTIES (STHP)
2003 ICC/ANSI A117.1 ACCESSIBILE AND USABLE BUILDINGS AND FACILITIES (ADA)
2006 GUNNISON LAND USE RESOLUTION (LUR)

**GENERAL BUILDING INFORMATION**

FOUNDATION: RUBBLE CONCRETE APPROXIMATELY 8" BELOW GRADE WITH A FULL CONCRETE CRAWLSPACE AT THE SOUTHEAST CORNER. CRAWLSPACE VARIES IN HEIGHT FROM 12" TO 0".
STRUCTURE: WOOD FRAME FLOOR, WALLS AND CEILING. 1x6 SHEATHING COVERED IN METAL PANEL OR WOOD BOARD AND BATTEN SIDING. EXISTING SLOPED ROOF TO THE NORTH HAS BEEN ENCLOSED BY A NEW ROOF STRUCTURE.
ROOF: NEW WOOD TRUSSES AND KNEE WALLS ADDED IN 1970'S; 1X PURLINS WITH A GALVANIZED METAL ROOF
IBC USE GROUP: A-3 ASSEMBLY (303.1)
BUILDING HEIGHT AND AREA LIMITATIONS
CONSTRUCTION TYPE V-B (NOT SPRINKLERED) (602.5)
ALLOWABLE HEIGHT: 40 FT
ACTUAL HEIGHT: >20 FT
BUILDING AREA LIMITATIONS, USE A-3 : 6,000 SF

FIRE RATING REQUIREMENTS
IBC USE GROUP A-3: 0 HRS

SHOW WINDOWS IN THE EXTERIOR WALLS OF THE FIRST STORY ABOVE GRADE SHALL BE PERMITTED TO BE OF WOOD OR UNPROTECTED METAL FRAMING. (801.7)

MAXIMUM ARE OF EXTERIOR WALL OPENING, TABLE 705.8
0-3 FT - NOT PERMITTED, UNPROTECTED, NONSPRINKLERED
5-10 FT - 10% ALLOWABLE AREA, UNPROTECTED, NONSPRINKLERED
(THIS DESIGN ASSUMES A 15 FT RESIDENTIAL SETBACK ON THE ADJACENT LOT)

**FIRE RATED CONSTRUCTION**
BUILDING ELEMENTS: 0 HRS
STRUCTURAL ELEMENTS (ALL): 0 HRS

INTERIOR WALL AND CEILING FINISH REQUIREMENTS BY OCCUPANCY (TABLE 803.9)

GROUP A-3 NONSPRINKLERED: ROOMS AND ENCLOSED SPACES, CLASS 'C' INTERIOR FINISH
**MEANS OF EGRESS (CHAPTER 10)**

OCCUPANT LOAD (TABLE 1004.1.1)
MAIN LEVEL 1176 SF
STAGE: 179 SF
TOTAL AREA A-3: 1355 SF
USE GROUP A-3 (1 OCCUPANT PER 15 SF): 91 OCCUPANTS

MINIMUM EGRESS WIDTH
MINIMUM DOOR WIDTH: (.2" PER OCCUPANT) 9.2" OR 32" MINIMUM
STAIRWAY WIDTH: (.3" PER OCCUPANT) OR 3.6" OR 36" MINIMUM

EGRESS DOORS (1008)
ALL EGRESS DOORS MUST BE SIDE-HINGED SWING TYPE.
DOORS MUST SWING IN THE DIRECTION OF EGRESS WHEN SERVING OCCUPANT LOAD OVER 50.
DOORS IN SERIES MUST BE AT LEAST 48" PLUS THE WIDTH OF THE DOOR SWINGING INTO THE SPACE APART.
PANIC DEVICES REQUIRED ON DOORS SERVING ASSEMBLY OCCUPANCIES AND AREAS SERVING MORE THAN 100 OCCUPANTS.

LANDINGS AT DOORS (1008.1.5)
LANDINGS SHALL HAVE A WIDTH NOT LESS THAN THE REQUIRED WIDTH OF THE STAIRWAY OR THE WIDTH OF THE DOOR, WHICHEVER IS GREATER.
WHEN A LADING SERVES AN OCCUPANT LOAD GREATER THAN 50, DOORS IN ANY POSITION SHALL NOT REDUCE THE LANDING TO LESS THAN ONE-HALF ITS REQUIRED WIDTH. (1009.4 EXCEPTION 2)

EGRESS STAIRS (1009)
STAIR WIDTH
80" MINIMUM HEADROOM
7" MAX RISER HEIGHT, 11" MAX THREAD DEPTH
LEAST DIMENSION OF LANDINGS MUST BE AT LEAST THE WIDTH OF THE STAIRWAY.
HANDRAILS (1009.10)
34" TO 38" ABOVE THE LEADING EDGE OF STAIR TREAD NOSINGS
GRASPABILITY (1012.3)
CIRCULAR: 1-1/4" DIAMETER MINIMUM, 2" DIAMETER MAXIMUM
OTHER: PERIMTER DIMENSION: 4" MIN AND 6-1/4" MAX, CROSS SECTION DIMENSION: 2-1/4" MAX.
EXTEND HORIZONTALLY 12" MIN BEYOND TOP RISER AND CONTINUE SLOPE FOR ONE TREAD WIDTH BEYOND BOTTOM RISER. RETURN ENDS OF RAIL TO WALL OR POST.
CLEARANCE: MINIMUM 1-1/2" CLEAR TO WALL
PROJECT NO MORE THAN 4-1/2" INTO REQUIRE STAIR WIDTH

RAMPS (1010)
RAMPS USED AS PART OF A MEANS OF EGRESS SHALL HAVE A RUNNING SLOPE NOT STEEPER THAN ONE UNIT VERTICAL IN 12 UNITS HORIZONTAL.
VERTICAL RISE: THE RISE FOR ANY RAMP RUN SHALL BE 30 INCHES MAXIMUM.
MINIMUM WIDTH: MINIMUM WIDTH SHALL NOT BE LASS THAN THAT REQUIRED FOR CORRIDORS. THE CLEAR WIDTH OF A RAMP BETWEEN HANDRAILS, IF PROVIDED, OR OTHER PERMISSIBLE PROJECTIONS SHALL BE 36 INCHES MINIMUM. DOORS OPENING ONTO A LANDING SHALL NOT REDUCE THE CLEAR WIDTH TO LESS THAN 42 INCHES.

LANDINGS: RAMPS SHALL HAVE LANDINGS AT THE TOP AND BOTTOM OF EACH RAMP, POINTS OF TURNING, ENTRANCE, EXITS AND AT DOORS. LANDINGS SHALL BE AT LEAST AS WIDE AS THE WIDEST RAMP RUN. LANDINGS LENGTH SHALL BE 60 INCHES MINIMUM.

RAMP CONSTRUCTION - OUTDOOR CONDITIONS. OUTDOOR RAMPS AND OUTDOOR APPROACHES TO RAMPS SHALL BE DESIGN SO THAT WATER WILL NOT ACCUMULATE ON WALK SURFACES. (1010.7)

RAMPS WITH A RISE GREATER THAN 6 INCHES SHALL HAVE HANDRAILS ON BOTH SIDES. (1010.8)

EDGE PROTECTION - EDGE PROTECTION SHALL BE PROVIDED ON EACH SIDE OF RAMP RUNS AND AT EACH SIDE OF RAMP LANDINGS. (1010.9)

EXIT SIGNS (1011.1)
EXIT SIGNS REQUIRED TO DIRECT PEOPLE TO EXITS WHERE MORE THAN ONE EXIT IS REQUIRED. EXIT SIGNS ARE FURTHER REQUIRED AT EACH EXIT. EXIT SIGNS SOULD BE LOCATED SUCH THAT NO POINT IN AN EXIT ACCESS CORRIDOR IS MORE THAN 100 FEET FROM THE NEAREST VISIBLE EXIT SIGN (1011.1)
EXIT SIGNS MUST REMAIN ILLUMINATED (MIN 5 FC) FOR AT LEAST 90 MINUTES FOLLOWING LOSS OF POWER (1011.5.2)
ALL EGRESS LIGHTING ELEMENTS MUST BE ILLUMINATED AT NOT LESS THAN ONE FOOT CANDLE LEVEL FOR AT LEAST 90 MINUTES FOLLOWING LOSS OF POWER. (1011.5.3)

LENGTH OF EXIT TRAVEL (TABLE 10.16.1)
UNSPRINKLED BUILDING
USE GROUP A: 200 LINEAR FEET

DEAD END CORRIDOR LIMITATIONS: 20 LINEAR FEET (1016.3)

NUMBER AND CAPACITY OF EXIT COMPONENTS (TABLES 1019.1):
MINIMUM NUMBER OF EXITS: 2 (50 OCCUPANTS AT EACH DOOR)
NUMBER OF EXITS PROVIDED: 2

GUARDS (1013)
(1013.1) LOCATED ALONG WALKING SURFACES MORE THAN 30" ABOVE ADJACENT FLOOR OR GRADE.
EXCEPTION 2 - ON THE AUDIENCE SIDE OF STAGES AND RAISED PLATFORMS, INCLUDING STEPS LEADING UP TO THE STAGE AND RAISED PLATFORMS.
(1013.2.) 42" MINIMUM HEIGHT ABOVE FLOOR.
(1013.3) BALUSTERS CONFIGURED SO THAT OPENINGS DO NOT ALLOW PASSAGE OF A 4" SPHERE TO A HEIGHT OF 34 ". FROM A HEIGHT OF 34" TO 42" ABOVE THE ADJACENT WALKING SURFACE, A SPHERE 8" IN DIAMETER SHALL NOT PASS.

**ADA ACCESSIBLE MEANS OF EGRESS**

STAIRS:
CLEAR WIDTH BETWEEN HANDRAILS: 48 INCHES (ADA 4.3.11.3)

**HISTORIC BUILDINGS SECTION 3409**

(3409.1) HISTORIC BUILDINGS. THE PROVISIONS OF THIS CODE RELATING TO THE CONSTRUCTION, REPAIR, ALTERATION, ADDITION, RESTORATION AND MOVEMENT OF STRUCTURES, AND CHANGE OF OCCUPANCY SHALL NOT BE MANDATORY FOR HISTORIC BUILDINGS WHERE SUCH BUILDINGS ARE JUDGED BY THE BUILDING OFFICIAL TO NOT CONSTITUTE A DISTINCT LIFE SAFETY HAZARD.

3411.9 HISTORIC BUILDINGS. THESE PROVISIONS SHALL APPLY TO BUILDINGS AND FACILITIES DESIGNATED AS HISTORIC STRUCTURES THAT UNDERGO ALTERATIONS OR A CHANGE OF OCCUPANCY, UNLESS TECHNICALLY INFEASIBLE. WHERE COMPLIANCE WITH THE REQUIREMENTS FOR ACCESSIBLE ROUTES, ENTRANCES OR TOILET FACILITIES WOULD THREATEN OR DESTROY THE HISTORIC SIGNIFICANCE OF THE BUILDING OR FACILITY, AS DETERMINED BY THE APPLICABLE GOVERNING AUTHORITY, THE ALTERNATIVE REQUIREMENTS OF SECTIONS 3411.9.1 THROUGH 3411.9.4 FOR THAT ELEMENT SHALL BE PERMITTED.

3411.9.1 SITE ARRIVAL POINTS. AT LEAST ONE ACCESSIBLE ROUTE FROM A SITE ARRIVAL POINT TO AN ACCESSIBLE ENTRANCE SHALL BE PROVIDED.

3411.9.3 ENTRANCES. AT LEAST ONE MAIN ENTRANCE SHALL BE ACCESSIBLE.

3/1/2015 9:56:57 PM

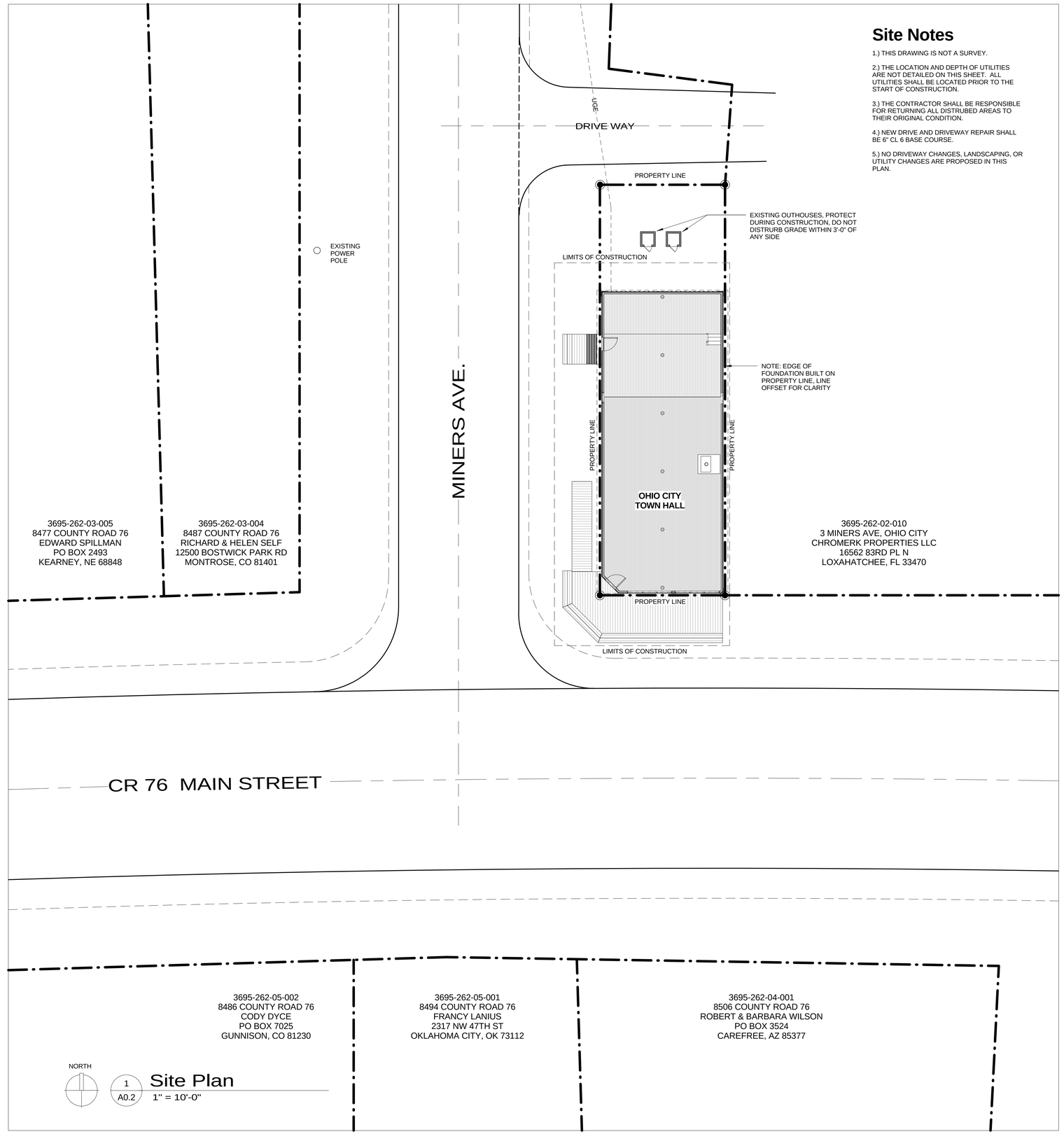


1 A0.2 Site Plan
1" = 10'-0"

## Site Notes

1.) THIS DRAWING IS NOT A SURVEY.

2.) THE LOCATION AND DEPTH OF UTILITIES ARE NOT DETAILED ON THIS SHEET. ALL UTILITIES SHALL BE LOCATED PRIOR TO THE START OF CONSTRUCTION.

3.) THE CONTRACTOR SHALL BE RESPONSIBLE FOR RETURNING ALL DISTRUBED AREAS TO THEIR ORIGINAL CONDITION.

4.) NEW DRIVE AND DRIVEWAY REPAIR SHALL BE 6" CL 6 BASE COURSE.

5.) NO DRIVEWAY CHANGES, LANDSCAPING, OR UTILITY CHANGES ARE PROPOSED IN THIS PLAN.


BEN WHITE
ARCHITECTURE
148 ELCHO AVE. #3
CRESTED BUTTE
COLORADO, 81224
TEL/FAX 970.349.5378
ben@benwhitearchitecture.com


PHASE II - INTERIOR & EXTERIOR REHABILITATION FOR THE
OHIO CITY TOWN HALL
8503 COUNTY ROAD 76
OHIO CITY, COLORADO 81237

ISSUE LOG

| | | |
|---|---|---|
| A | 3/2/15 | GCHCP REVIEW SET |

SITE PLAN & CODE REVIEW

PROJECT NO.: 120227
PROJECT DATE: 4/17/12
SHEET NUMBER:
A0.2

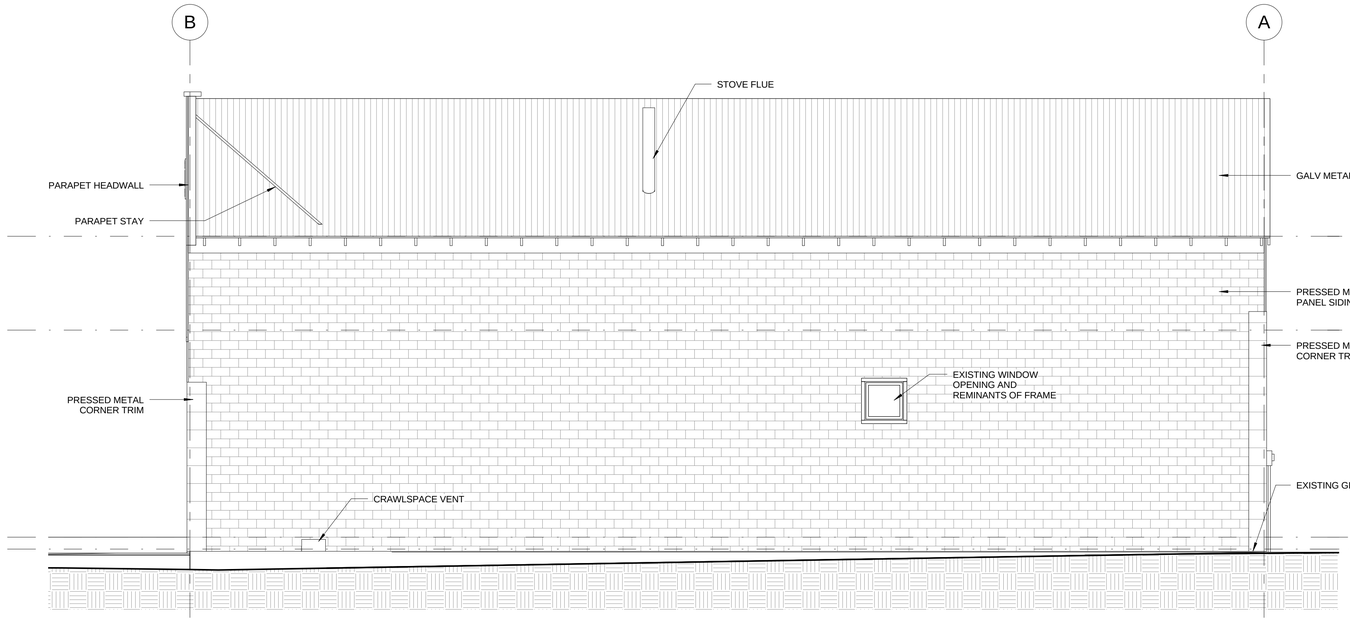


3 A2.1 **East Elevation**
1/4" = 1'-0"

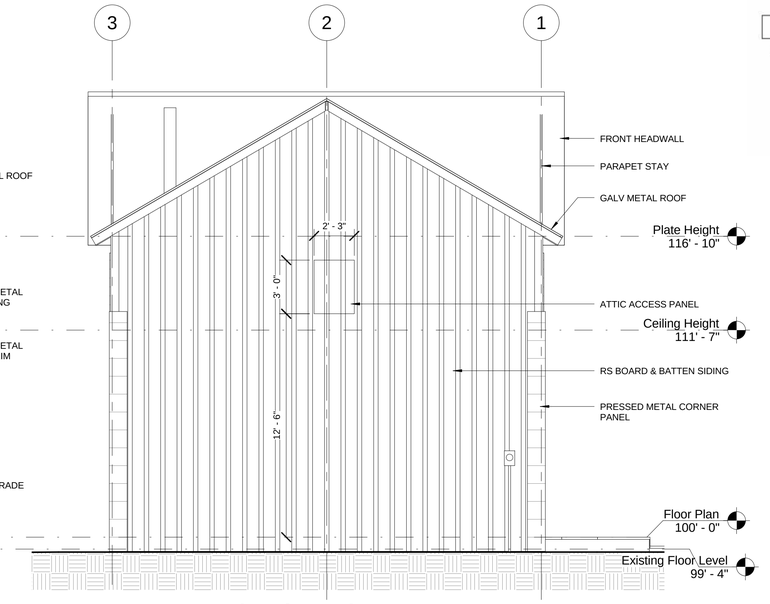


1 A2.1 **North Elevation**
1/4" = 1'-0"

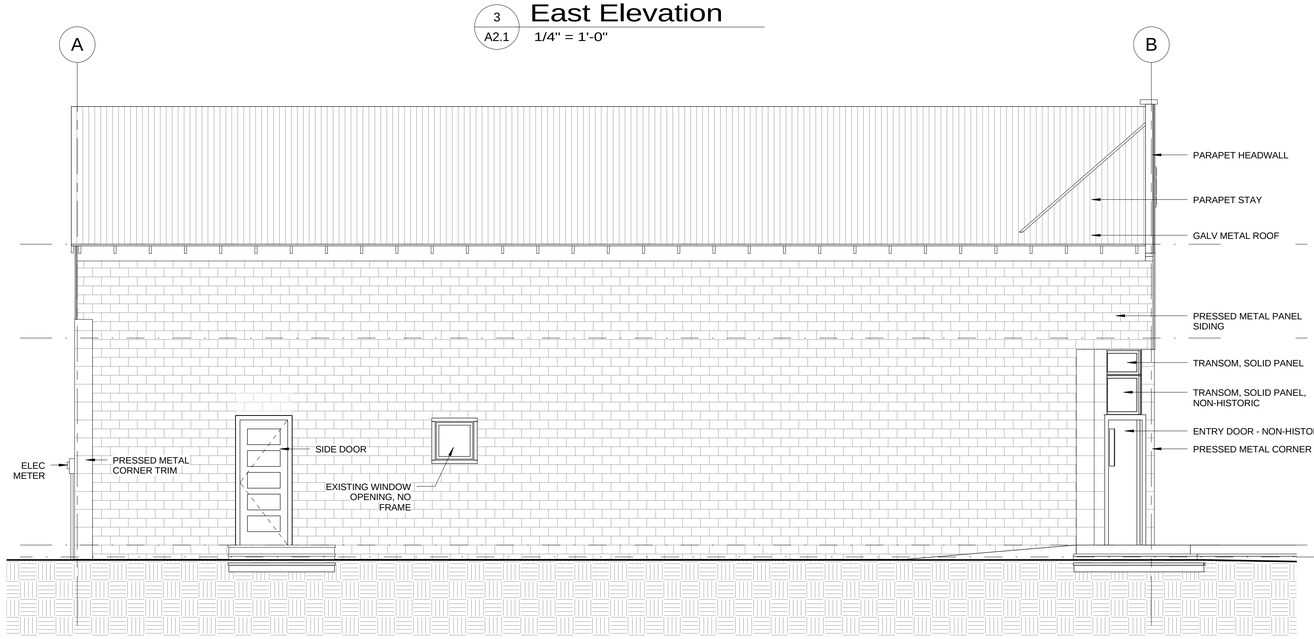


2 A2.1 **West Elevation**
1/4" = 1'-0"

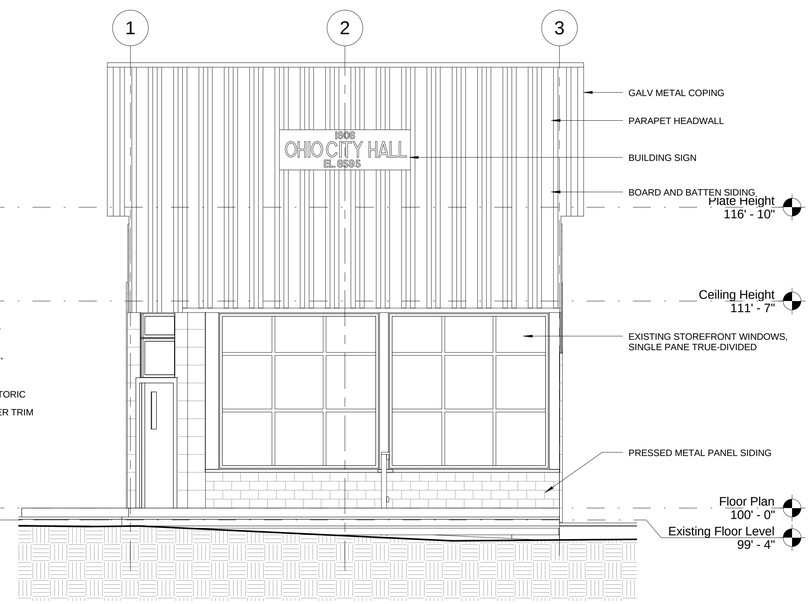


4 A2.1 **South Elevation**
1/4" = 1'-0"

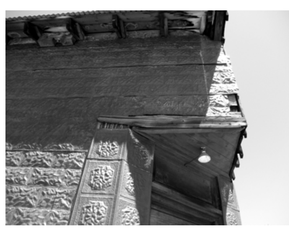

*FIG. 6 - DETAIL OF ENTRY*

*FIG. 7 - SOUTH (FRONT) ELEVATION*

*FIG. 8 - WEST ELEVATION*

*FIG. 9 - EAST ELEVATION*

*FIG. 10 - NORTH ELEVATION*

*FIG. 11 - LANDMARK PLAQUE*

BEN WHITE
ARCHITECTURE
148 ELCHO AVE. #3
CRESTED BUTTE
COLORADO, 81224
TEL/FAX 970.349.5378
ben@benwhitearchitecture.com

PHASE II - INTERIOR & EXTERIOR REHABILITATION FOR THE

# OHIO CITY TOWN HALL

8503 COUNTY ROAD 76
OHIO CITY, COLORADO 81237

ISSUE LOG

| | | |
|---|---|---|
| A | 3/2/15 | GCHCP REVIEW SET |

EXISTING ELEVATIONS

PROJECT NO.: 120227

PROJECT DATE: 4/17/12

SHEET NUMBER:

A2.1

3/1/2015 9:57:04 PM

BEN WHITE
ARCHITECTURE

148 ELCHO AVE. #3
CRESTED BUTTE
COLORADO, 81224

TEL/FAX 970.349.5378
ben@benwhitearchitecture.com

FIG. 17 - EXISTING SIDE ENTRY

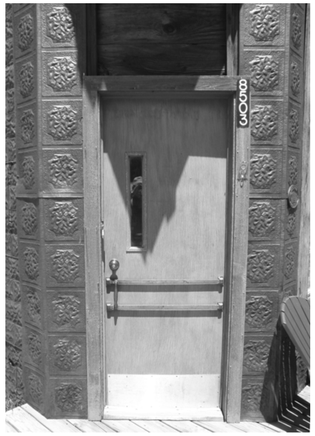


FIG. 16 - EXISTING ENTRY DOOR

FIG. 15 - DETAIL OF DOOR TRANSOM

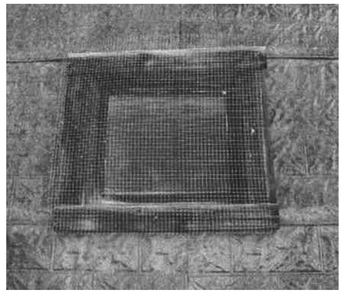

FIG. 13 - EXISTING EAST WINDOW & SURVIVING FRAME WORK

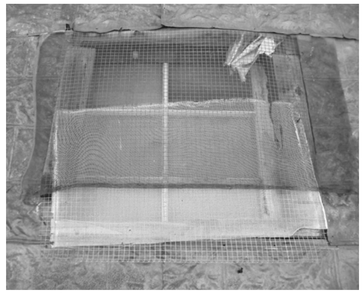

FIG. 12 - EXISTING WEST WINDOW OPENING

FIG. 14 - HISTORICAL PHOTO OF NORTH ELEVATION

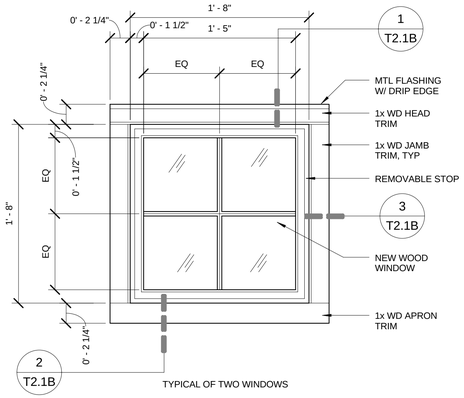


2 T2.1A **Window Elevation**
1 1/2" = 1'-0"

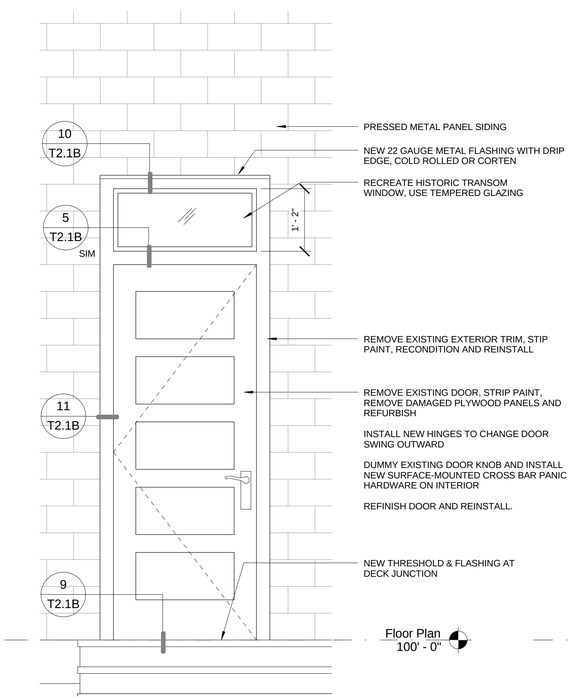


4 T2.1A **Side Door**
3/4" = 1'-0"

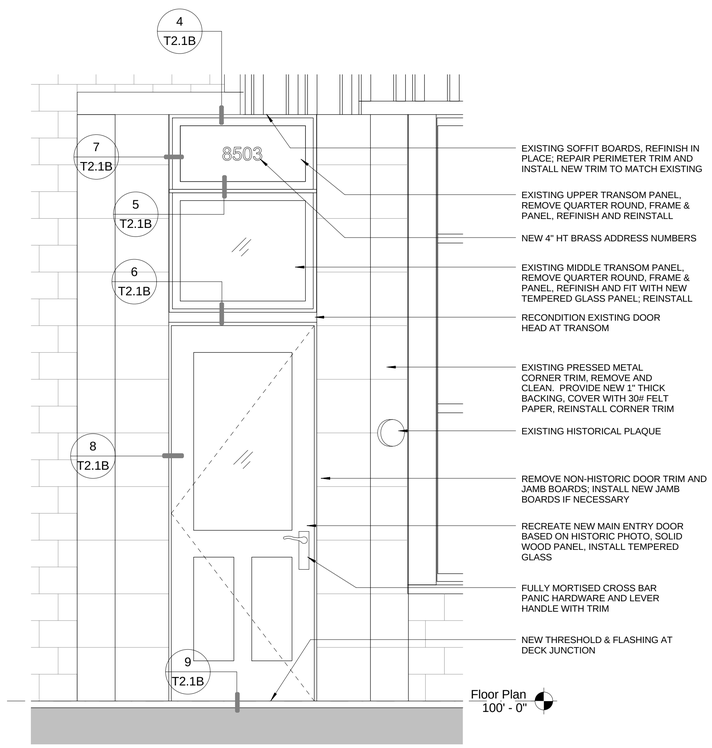


1 T2.1A **Entry Door**
3/4" = 1'-0"

## Finish Notes

**EXTERIOR DOOR TRIM - EXISTING**
1.) STRIP EXISTING PAINT/FINISH
2.) REPAIR EXISTING PANELS
3.) MARINE SPAR VARNISH

**EXTERIOR DOOR TRIM - NEW**
1.) MARINE SPAR VARNISH

**INTERIOR DOOR TRIM - EXISTING**
1.) STRIP EXISTING PAINT
2.) TONGUE OIL FINISH

**EXTERIOR WINDOW TRIM - NEW**
1.) MARINE SPAR VARNISH

**EXTERIOR WINDOW FRAME & MULLIONS - NEW**
1.) MARINE SPAR VARNISH

**INTERIOR WINDOW TRIM - EXISTING**
1.) STRIP EXISTING PAINT
2.) TONGUE OIL FINISH

PHASE II - INTERIOR & EXTERIOR REHABILITATION FOR THE

# OHIO CITY TOWN HALL

8503 COUNTY ROAD 76
OHIO CITY, COLORADO 81237

| ISSUE LOG | | |
|---|---|---|
| A | 3/2/15 | GCHCP REVIEW SET |

WINDOW & DOOR REHABILITATION

PROJECT NO.: 120227

PROJECT DATE: 4/17/12

SHEET NUMBER:

T2.1A

3/1/2015 9:57:07 PM

BEN WHITE
ARCHITECTURE
148 ELCHO AVE. #3
CRESTED BUTTE
COLORADO, 81224
TEL/FAX 970.349.5378
ben@benwhitearchitecture.com

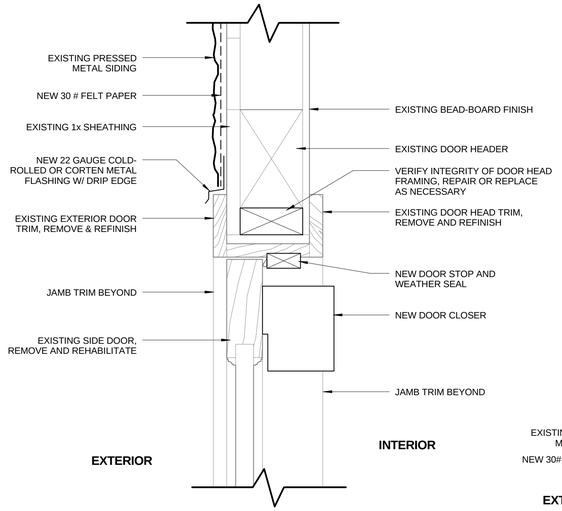


10 T2.1B **Side Door Head** 3" = 1'-0"

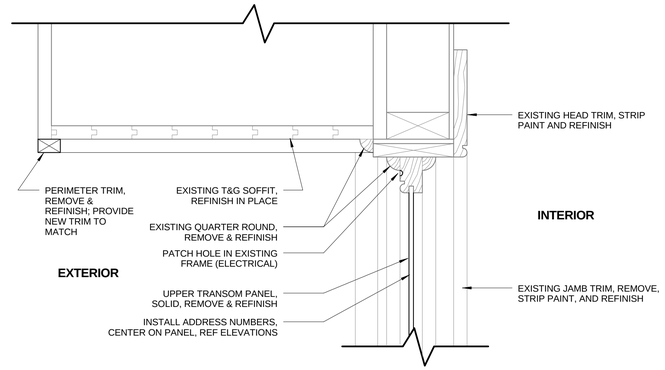


4 T2.1B **Transom Head** 3" = 1'-0"

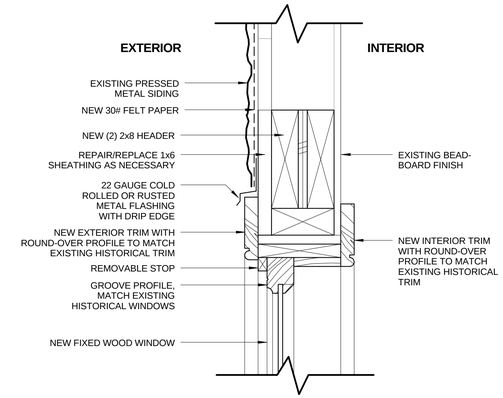


1 T2.1B **Window Head** 3" = 1'-0"

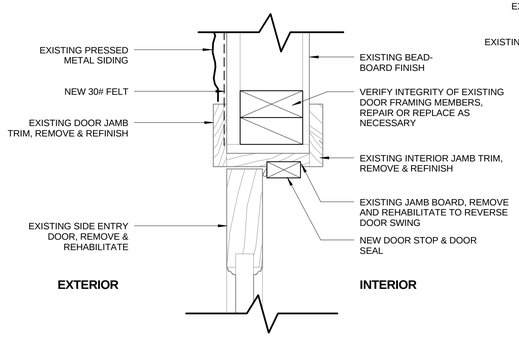


11 T2.1B **Side Door Jamb** 3" = 1'-0"

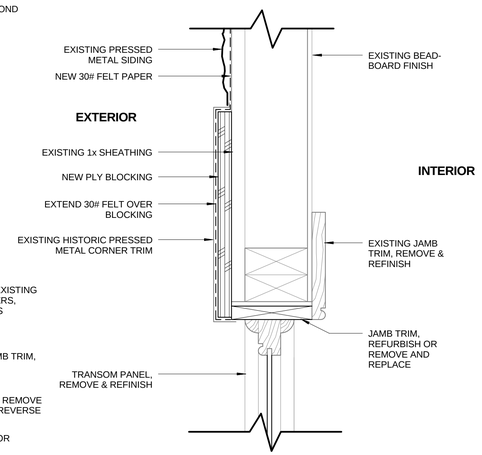


7 T2.1B **Transom Jamb** 3" = 1'-0"

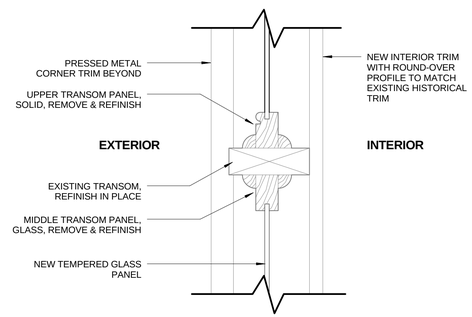


5 T2.1B **Transom** 3" = 1'-0"

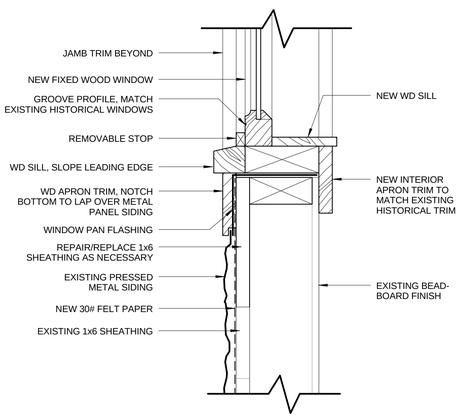


2 T2.1B **Window Sill** 3" = 1'-0"

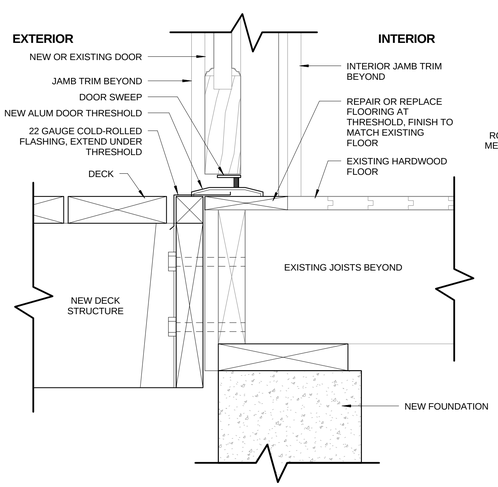


9 T2.1B **Typical Door Threshold** 3" = 1'-0"

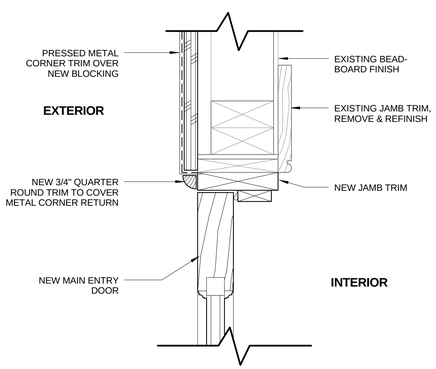


8 T2.1B **Main Door Jamb** 3" = 1'-0"

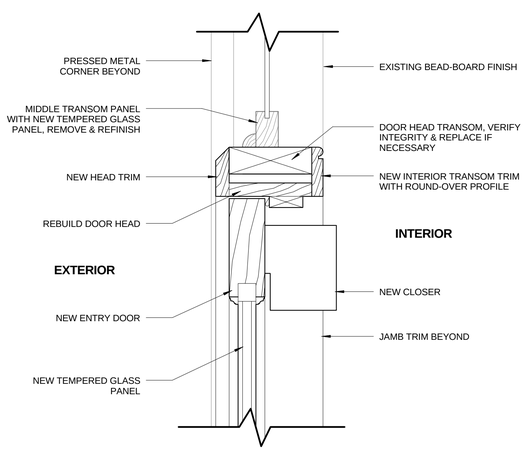


6 T2.1B **Main Door Head** 3" = 1'-0"

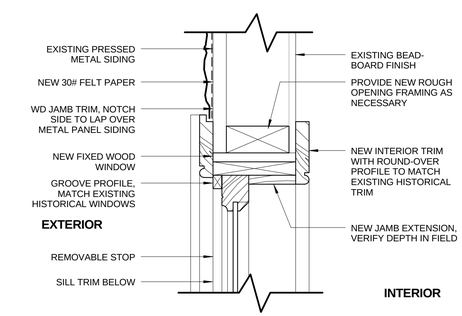


3 T2.1B **Window Jamb** 3" = 1'-0"

PHASE II - INTERIOR & EXTERIOR REHABILITATION FOR THE

# OHIO CITY TOWN HALL

8503 COUNTY ROAD 76
OHIO CITY, COLORADO 81237

ISSUE LOG

| | | |
|---|---|---|
| A | 3/2/15 | GCHCP REVIEW SET |

WINDOW & DOOR DETAILS

PROJECT NO.: 120227

PROJECT DATE: 4/17/12

SHEET NUMBER:

T2.1B

3/1/2015 9:57:09 PM

BEN WHITE
ARCHITECTURE
148 ELCHO AVE. #3
CRESTED BUTTE
COLORADO, 81224
TEL/FAX 970.349.5378
ben@benwhitearchitecture.com

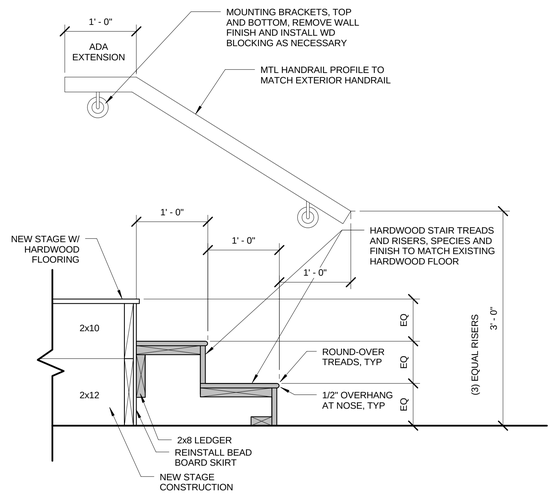


4 / T2.2 **Steps - Section**
1" = 1'-0"

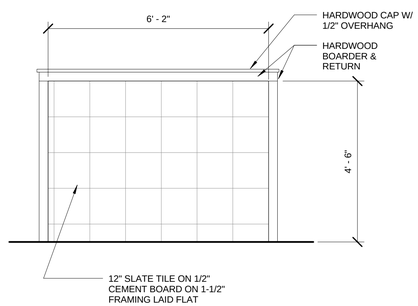


5 / T2.2 **Stove - Back Wall Elevation**
1/2" = 1'-0"

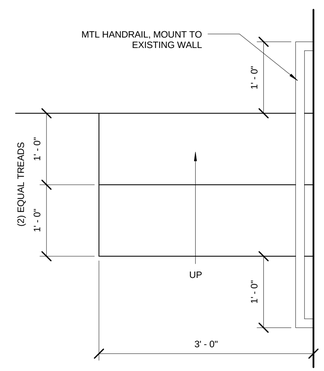


3 / T2.2 **Steps - Enlarged Plan**
1" = 1'-0"

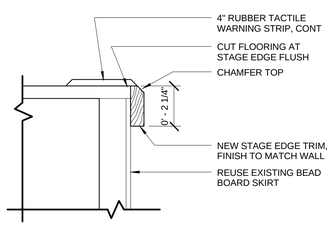


6 / T2.2 **Stage Edge Detail**
3" = 1'-0"

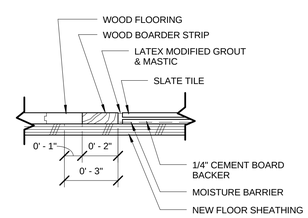


7 / T2.2 **Transition Strip**
3" = 1'-0"

**NOTE TO OWNER**
THE EXISTING STAGE IS CONSTRUCTED WITH 2x8 FLOOR JOISTS AT 16" OC. CONSTRUCTION DOES NOT COMPLY WITH THE 100 PSF FLOOR LOAD. IT IS RECOMMENDED THAT THE STAGE BE REMOVED OR REBUILT WITH ADEQUATE STRUCTURAL MEMBERS.

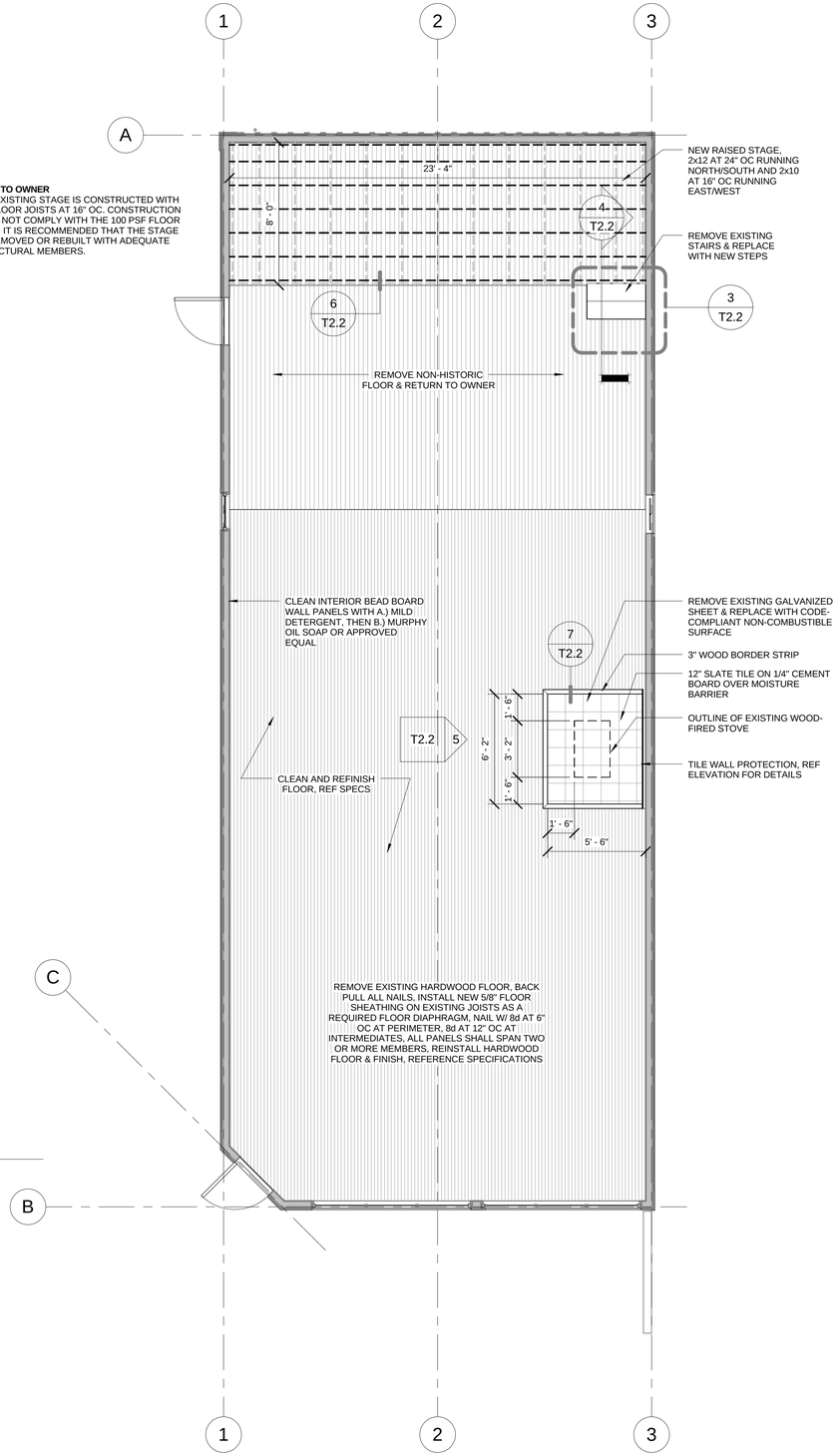


1 / T2.2 **Floor Plan - Flooring**
1/4" = 1'-0"

PHASE II - INTERIOR & EXTERIOR REHABILITATION FOR THE
# OHIO CITY TOWN HALL
8503 COUNTY ROAD 76
OHIO CITY, COLORADO 81237

| ISSUE LOG | | |
|---|---|---|
| A | 3/2/15 | GCHCP REVIEW SET |

WOOD FLOOR REHABILITATION

PROJECT NO.: 120227
PROJECT DATE: 4/17/12
SHEET NUMBER:
T2.2

3/1/2015 9:57:10 PM

BEN WHITE
ARCHITECTURE
148 ELCHO AVE. #3
CRESTED BUTTE
COLORADO, 81224
TEL/FAX 970.349.5378
ben@benwhitearchitecture.com

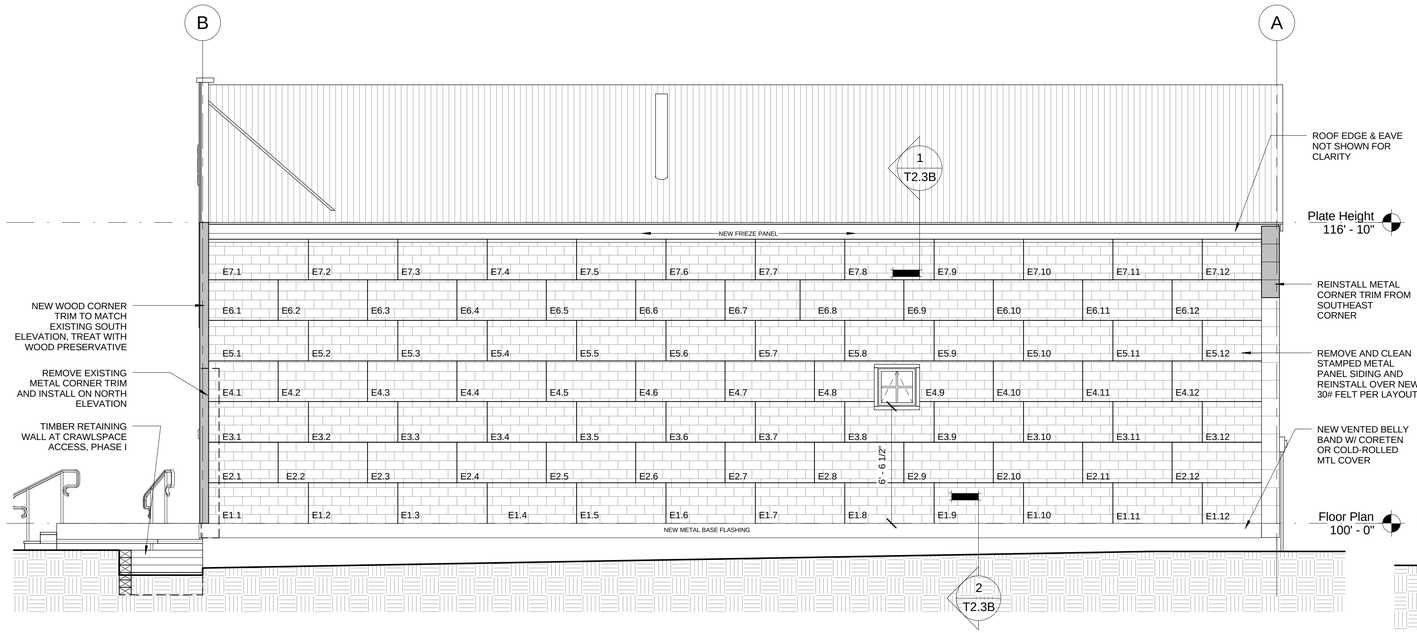


1 T2.3A **East - Rehabilitation**
1/4" = 1'-0"

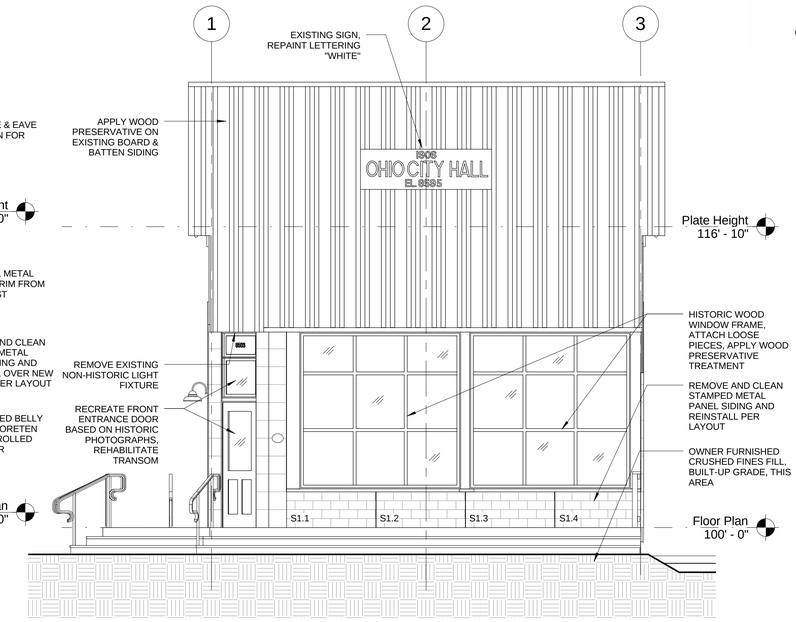


4 T2.3A **South - Rehab**
1/4" = 1'-0"

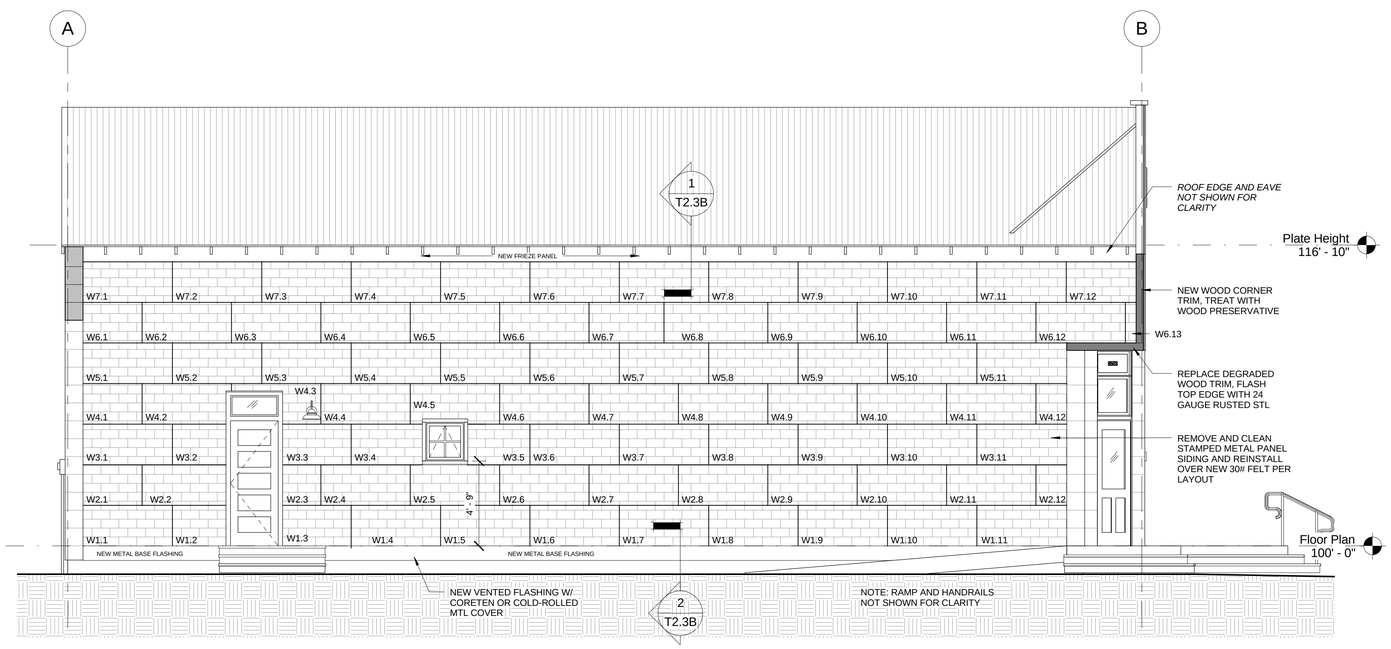


2 T2.3A **West - Rehabilitation**
1/4" = 1'-0"

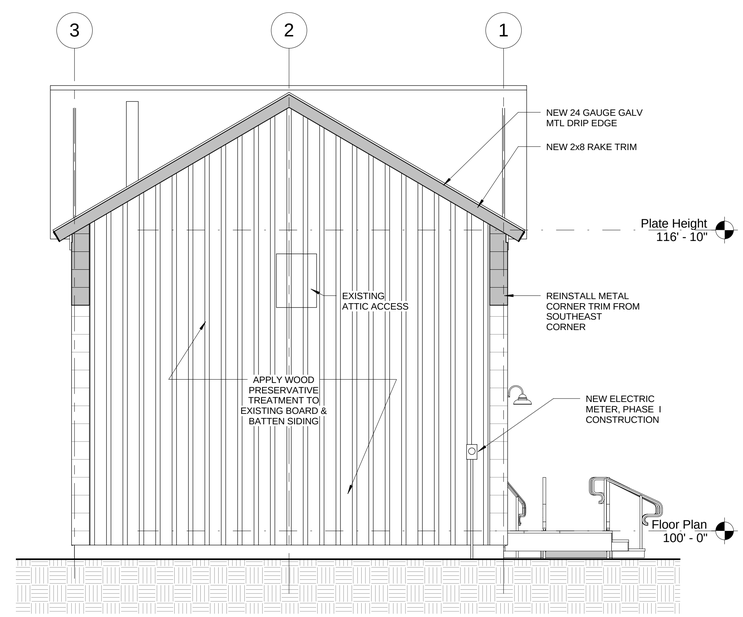


3 T2.3A **North - Rehab**
1/4" = 1'-0"

PHASE II - INTERIOR & EXTERIOR REHABILITATION FOR THE

# OHIO CITY TOWN HALL

8503 COUNTY ROAD 76
OHIO CITY, COLORADO 81237

ISSUE LOG

| | | |
|---|---|---|
| A | 3/2/15 | GCHCP REVIEW SET |

EXTERIOR REHABILITATION

PROJECT NO.: 120227

PROJECT DATE: 4/17/12

SHEET NUMBER:

T2.3A

3/1/2015 9:57:14 PM

This is the flat-roofed building that you can see in an earlier overview photo of Ohio City. Early 1930's.
Colorado Railroad Museum

HISTORIC REFERENCE PHOTO FROM "SOUTH PARK'S GUNNISON DIVISION MEMORIES AND THEN SOME" BY TOM AND DENISE KLINGER

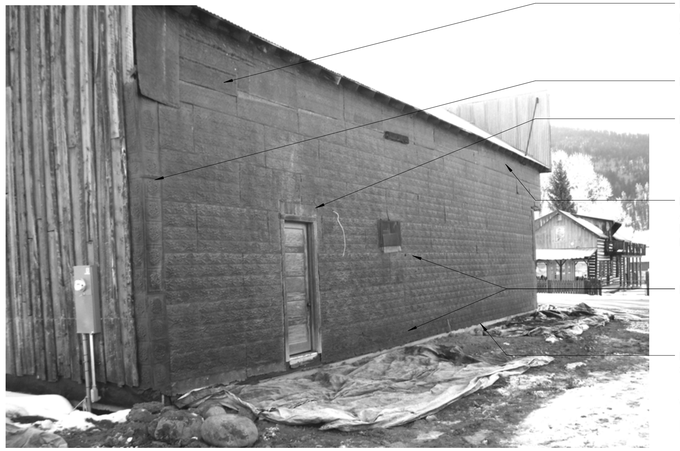

PANELS HAVE BEEN FIELD CUT AND REAPPLIED, LIKELY DURING THE 1970's OVERFRAMED ROOF PROJECT

INCOMPLETE METAL CORNER TRIM

NON-HISTORIC INFILL PANEL ABOVE DOOR

REMNANTS OF CLIFF SWALLOW NESTS ALONG EAVE LINE AND DISCOLORATION OF METAL PANELS BELOW FROM BIRD DROPPINGS

HOLES AND BENT PANELS

DEGRADED (RUSTED) CONDITION OF LOWER 8" OF ROW 1

WEST ELEVATION DURING THE PHASE I FOUNDATION STABILIZATION PROJECT

PARTIAL METAL CORNER TRIM

PANELS CUT ON A SLOPE, BACK HALF OF TOP ROW 8

FIELD PANELS ARE IN GOOD CONDITION

CUT OUT FROM CRAWLSPACE VENT

DEGRADED (RUSTED) CONDITION OF LOWER 8" OF ROW 1

FOUNDATION BOX BEAM AT EXISTING CONCRETE FOUNDATION

EAST ELEVATION DURING THE PHASE I FOUNDATION STABILIZATION PROJECT

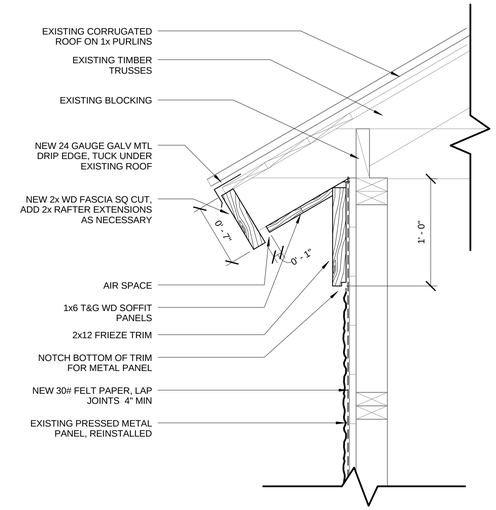


**REHABILITATION NOTE: THE INTENT OF THIS DETAIL IS TO DISCOURAGE THE NESTING OF BARN SWALLOWS AND TO REMEDY NON-HISTORIC INSTALLATION OF PRESSED METAL SIDING ALONG EAVE.**

1 / T2.3B **Eave Detail**
1 1/2" = 1'-0"

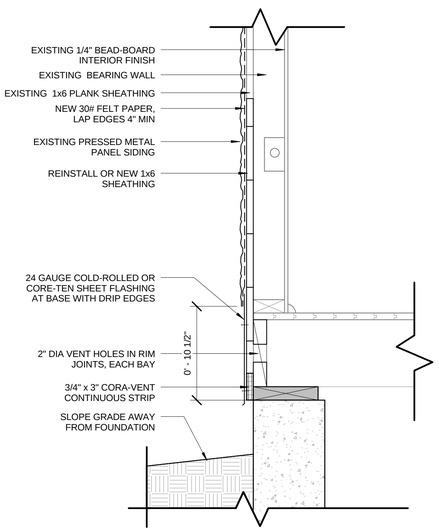


**REHABILITATION NOTE: THE INTENT OF THIS DETAIL IS TO A.) RISE & PROTECT HISTORIC PRESSED METAL SIDING ABOVE THE LEVEL OF SNOW ACCUMULATION, B.) DISGUISE CRAWLSPACE VENTILATION WITHOUT USE OF STANDARD CRAWLSPACE VENTS.**

2 / T2.3B **Rim Joist**
1 1/2" = 1'-0"


BEN WHITE
ARCHITECTURE
148 ELCHO AVE. #3
CRESTED BUTTE
COLORADO, 81224
TEL/FAX 970.349.5378
ben@benwhitearchitecture.com


PHASE II - INTERIOR & EXTERIOR REHABILITATION FOR THE

# OHIO CITY TOWN HALL

8503 COUNTY ROAD 76
OHIO CITY, COLORADO 81237

ISSUE LOG

| | | |
|---|---|---|
| A | 3/0/15 | GCHCP REVIEW SET |

DETAILS

PROJECT NO.: 120227

PROJECT DATE: 4/17/12

SHEET NUMBER:

T2.3B

3/1/2015 9:57:18 PM

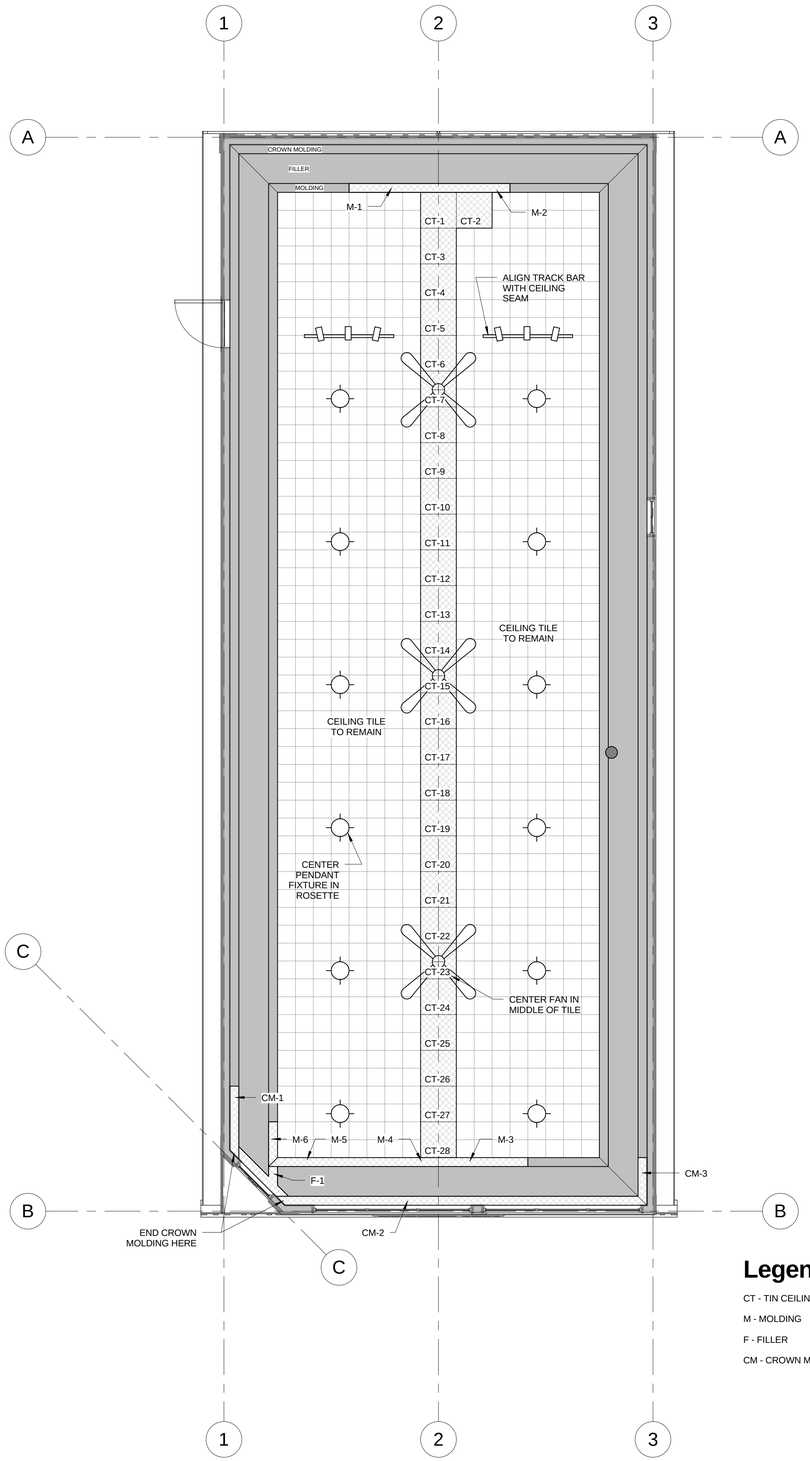


## Legend

CT - TIN CEILING TILE

M - MOLDING

F - FILLER

CM - CROWN MOLDING

NORTH

1 / T2.4 **Ceiling Plan**

1/4" = 1'-0"

*FIG. 13 - EXISTING TIN CEILING TILES*

*FIG. 14 - EXISTING TIN CEILING MOLDING, FILLER & CROWN MOLDING*


BEN WHITE
ARCHITECTURE

148 ELCHO AVE. #3
CRESTED BUTTE
COLORADO, 81224

TEL/FAX 970.349.5378
ben@benwhitearchitecture.com


PHASE II - INTERIOR & EXTERIOR
REHABILITATION FOR THE

# OHIO CITY TOWN HALL

8503 COUNTY ROAD 76
OHIO CITY, COLORADO 81237

ISSUE LOG

| | | |
|---|---|---|
| A | 3/0/15 | GCHCP REVIEW SET |

METAL CEILING TILE REHABILITATION

PROJECT NO.: 120227

PROJECT DATE: 4/17/12

SHEET NUMBER:

T2.4

3/1/2015 9:57:20 PM