**GUNNISON COUNTY PUBLIC WORKS DEPARTMENT**
195 Basin Park Drive, Gunnison, CO 81230
(970) 641-0044

**Distribute Copies To:**
Applicant
Public Works Permit Files
County Building Inspector

Permit No._____

# ACCESS PERMIT APPLICATION

Paid: $ 75.00
Date: _____
Cash/Check/CC: _____
Received By: _____

Property Owner, _____("Applicant") requests permission and authority from the Gunnison County Public Works Department to construct an access connecting to _____(road name), in Gunnison County, adjacent to his/her property located on the _____ side of the road, with a physical address of _____ _____, for the purpose of obtaining access to _____ (state nature of business).

The Applicant binds and obligates himself/herself to construct and maintain the access in accordance with the provisions, specifications, and conditions enumerated in this document, and the Gunnison County Standard Specifications for New Road and Bridge Construction.

## GENERAL PROVISIONS

1. The Applicant represents all parties in interest and affirms that the access to be constructed by him/her is for the bona fide purpose of securing access to his/her property and not for the purpose of doing business or servicing vehicles on the road right-of-way.
2. The Applicant shall furnish all labor and materials, perform all work, and pay all costs in connection with the construction of the access and its appurtenances.
3. All work shall be completed within one year of the permit date. Any extension must be requested in writing prior to the expiration date of the original permit.
4. The type of construction shall be designated and/or approved by the Gunnison County Public Works Department and all materials used shall be of satisfactory quality and subject to inspection and approval of the Gunnison County Public Works Department.
5. The traveling public shall be protected during the installation with proper warning signs and signals and the Gunnison County Public Works Department and it's duly appointed agents and employees shall be held harmless against any action for personal injury or property damage sustained by reason of the exercise of the permit.
6. The Applicant shall assume responsibility for the removal and storage of snow, ice or sleet upon any portion of the access even though deposited on the driveway in the course of snow removal operations.
7. In the event it becomes necessary to remove any right-of-way fence, the posts on either side of the entrance shall be securely braced before the fence is cut to prevent any slacking of the remaining fence, and all posts and wire removed shall be turned over to the Gunnison County Public Works Department.
8. No revisions or additions shall be made to the access or its appurtenances without the written permission of the Gunnison County Public Works Department.
9. Provisions and specifications outlined herein shall apply on all roads in Gunnison County under the jurisdiction of the Gunnison County Standard Specifications for New Road and Bridge Construction.
10. Approval of this permit does not guarantee approval of any other permits required by Gunnison County.
11. Individual accesses may be subject to additional specifications or standards to meet conditions of the Gunnison County Land Use Resolution. Such special conditions will be attached to the approved permit if applicable.
12. If the access is off of a State of Colorado highway the applicant must obtain an access permit from the State and provide a copy of that approved permit with this completed Access Permit Application.
13. The applicant agrees that applicant shall pay Gunnison County's costs and attorney's fees for enforcement of the requirements of this permit.

**A SITE PLAN AND LOCATION MAP MUST ACCOMPANY THIS PERMIT.**

In signing this application and upon receiving Gunnison County Public Works Department authorization and permission to install the access described herein, the Applicant signifies that he/she has read, understands and accepts the foregoing provisions and conditions and agrees to construct the access in accordance with the accompanying specifications plan reviewed and approved by the Gunnison County Public Works Department. The U.S. Fish and Wildlife Service has determined effective December 22, 2014 threatened species status, under the Endangered Species Act of 1973 as amended, for the Gunnison Sage-grouse. Gunnison County approval of this County permit is not U.S. Fish and Wildlife Service approval of any activity described or authorized by this County permit. Gunnison County is not and does not act as your representative with regard to consultation with the U.S. Fish and Wildlife Service or performance of U. S. Fish and Wildlife Service requirements.

Witness: _____

Signed: _____
Signature of Applicant/Representative

_____

_____
Address

_____
Telephone Number

Permit granted _____, subject to the provisions, specifications and conditions stipulated herein.

_____
Engineering Representative

_____
Director of Public Works

**THIS PERMIT SHALL BE MADE AVAILABLE AT THE SITE WHERE AND WHEN WORK IS BEING DONE.**

## INSPECTION INSTRUCTIONS

A. Approved driveway permit applications are valid for one (1) year from the approval date.

B. A final inspection of the completed driveway is required at the same time as the frame inspection. It is the responsibility of the applicant to schedule the driveway inspection by contacting Gunnison County Public Works Department at 970-641-0044. The entire driveway must be completed and visible at the time of inspection. A complete driveway includes construction to proper width, proper depth and type of gravel installed, culverts, turnouts, etc. installed as per Section 4.5 of the Gunnison County Standards and Specifications for New Road and Bridge Construction. If any Special Conditions have been attached to the approved driveway permit those also need to be addressed as a part of a completed driveway.

---

***** VERY IMPORTANT *****

**IF THE FIRST DRIVEWAY INSPECTION RESULTS IN A FAILURE EACH ADDITIONAL RE-INSPECTION WILL COST $250.00, WHICH IS PAYABLE AT THE TIME OF THE RE-INSPECTION.**

# STANDARD TURNAROUND OPTIONS

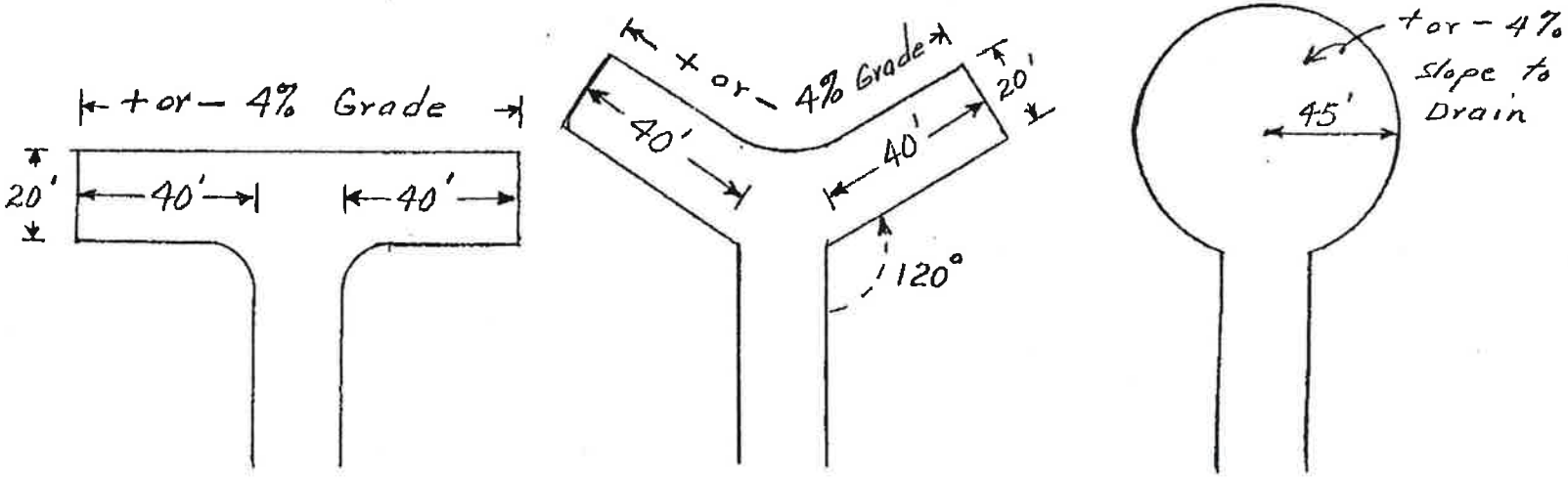


T – Turnaround

Y – Turnaround

Cul-de-sac

General Construction Notes:

1. Road width going into the Turnaround may vary from 16 feet to 24 feet.
2. Grade on the road approaching the Turnaround shall not exceed 4% for 50 feet.
3. Grades on 'T' or 'Y' Turnarounds shall not exceed + or – 4%.
4. A minimum of 4% crown, inslope or outslope, shall be constructed into the Turnaround to provide drainage.
5. 'T' Turnarounds shall be a minimum of 20 feet from any flammable structures.

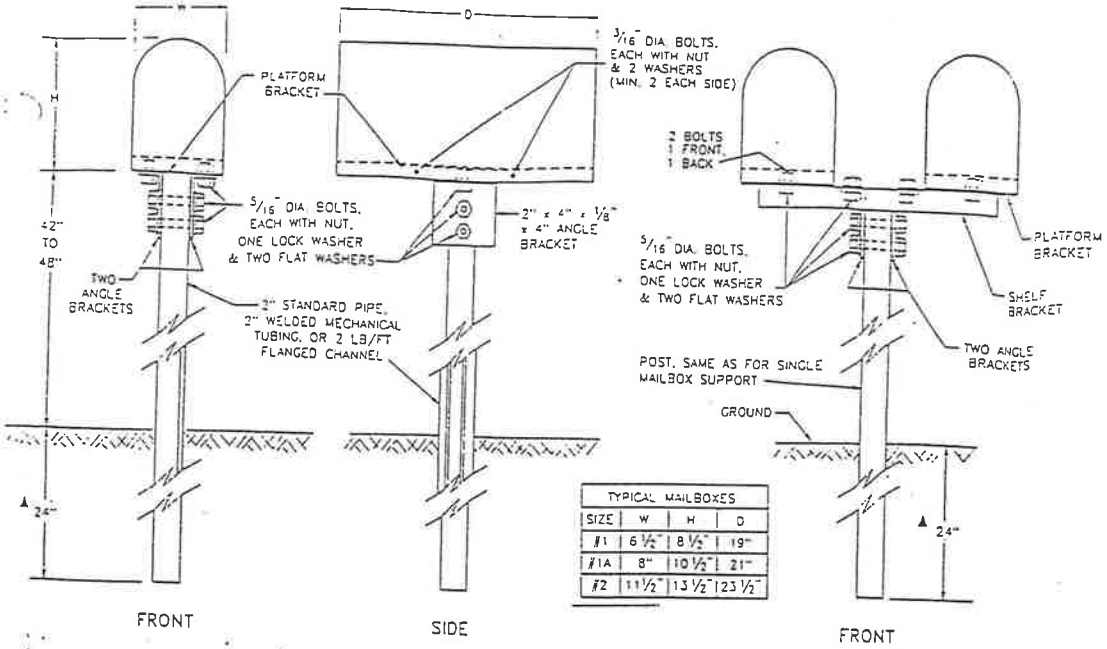


| TYPICAL MAILBOXES | | | |
|---|---|---|---|
| SIZE | W | H | D |
| #1 | 6 1/2" | 8 1/2" | 19" |
| #1A | 8" | 10 1/2" | 21" |
| #2 | 11 1/2" | 13 1/2" | 23 1/2" |

SINGLE (TYPE 1) AND DOUBLE (TYPE 2) MAILBOX SUPPORTS

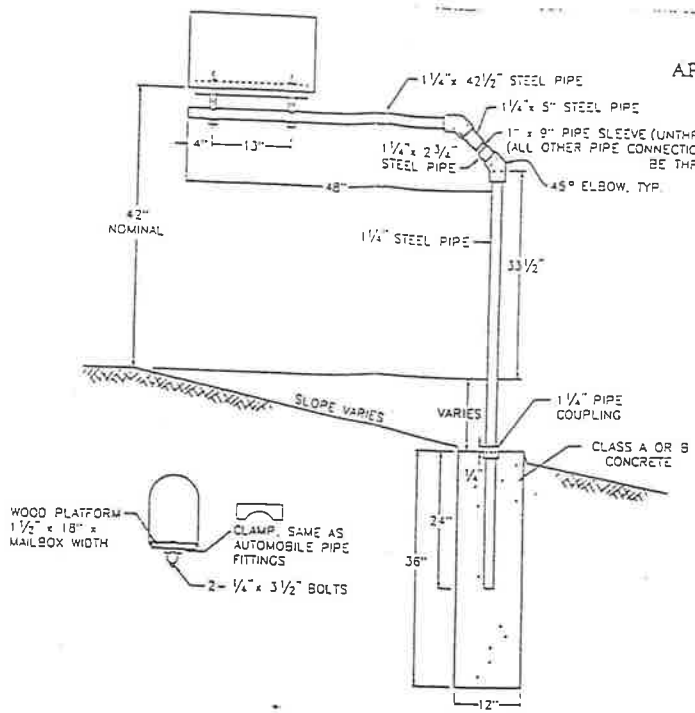


CANTILEVER (TYPE 4) MAILBOX SUPPORT

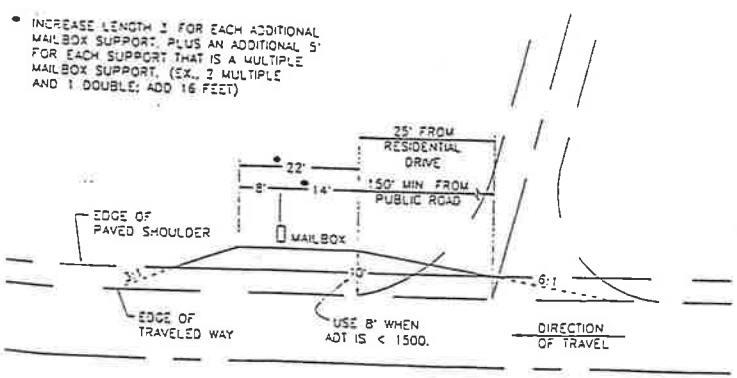


MAILBOX TURNOUT

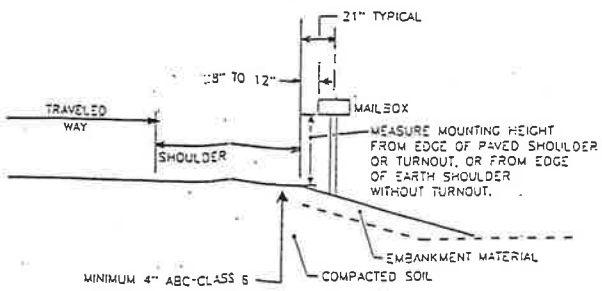


TYPICAL SECTION

## GENERAL NOTES

A SINGLE MAILBOX SHALL BE RESET AT THE FINAL DESIGNATED LOCATION ON A NEW TYPE 1 SUPPORT. TWO MAILBOXES RESET AT THE SAME LOCATION SHALL BE RESET ON ONE DOUBLE (TYPE 2) SUPPORT OR ON TWO SINGLE (TYPE 1) SUPPORTS AS DESIGNATED.

POSTS, BRACKETS, AND ALL MOUNTING HARDWARE SHALL BE GALVANIZED IN ACCORDANCE WITH AASHTO M 232 AND M 111, EXCEPT THE WELDED MECHANICAL TUBING COATING SHALL BE G-90 OR EQUIVALENT PER ASTM A 525. TWO INCH OUTSIDE DIAMETER, 14 GAGE WELDED MECHANICAL TUBING SHALL CONFORM TO THE REQUIREMENTS OF ASTM A 513.

ON ROADS WITH CURB AND GUTTER, THE MAILBOX SUPPORT SHALL BE LOCATED IN THE GROUND SO THE FRONT OF THE MAILBOX SHALL BE 8" TO 12" BACK FROM THE CURB FACE. THE HEIGHT SHALL BE 42" TO 48" MEASURED FROM THE GUTTER FLOW LINE TO THE BOTTOM OF THE MAILBOX.

THE GROUND SURROUNDING THE MAILBOX SUPPORTS SHALL BE FIRM, UNDISTURBED GROUND, OR WELL COMPACTED REGRADED SOIL. THE SUPPORTS ARE NORMALLY DRIVEN, BUT THEY MAY BE PLACED IN A DUG HOLE WITH WELL COMPACTED BACKFILL.

# MAILBOX SUPPORTS

## 4.5 Access Control Standards

All driveways that access a County road or right-of-way shall have a minimum surface width of eighteen (18) feet at the edge of the pavement or road surface, and taper to a minimum surface width of sixteen (16) feet at a distance of six feet from the edge of the road, and maintain this surface width to the end of the driveway. All such driveways shall be constructed with the following minimum section dimensions:

| Driveway Material | Minimum Section Depths |
|---|---|
| Concrete | 6 inches; |
| HBP | 2 inches with 6 inches Class 6 aggregate base course; |
| Gravel | 6 inches Class 6 aggregate base course; |
| Native Material | Permissible only if access road is native material or native material provides structural stability and an all-weather driving surface. |

and shall be installed in accordance with both an approved driveway permit and all applicable sections of these Standards and Specifications. Access to a County road or right-of-way must be obtained as described in Section 7.4.

The maximum grades for driveways shall be 11%. The grade of entrance and exit shall slope downward and away from the road surface at the same rate as the normal cross slope and for a distance equal to the width of the shoulder, but in no case less than ten feet from the traveled way.

All driveways and approaches shall be constructed so that they shall not interfere with the drainage system of the roadway. The applicant will be required to pay for and install, at his own expense, drainage structures at entrances and exits which will become an integral part of the existing drainage system. The dimensions of all drainage structures must be approved by the
Gunnison County Public Works Department representative prior to installation. The minimum size of culvert installed parallel to the road will be 12" diameter. Maintenance of the culvert shall be the responsibility of the property owner.

The horizontal axis of an approach to the roadway shall normally be at right angle to the centerline of the roadway and extend a minimum of forty (40) feet beyond the traveled way. An angle between 90 and 60 degrees shall be permitted if it can be shown that physical constraints exist that require an approach new angle of less than 90 degrees. An angle less than 60 degrees is not permitted.

No more than one approach shall be allowed on any parcel of property when there is less than one hundred (100) feet of property frontage.

In the case of flared driveways, the flared portion adjacent to the traveled way shall not encroach upon adjoining property.

An access approach that is gated shall be designed so that the longest vehicle using it can completely clear the traveled way when the gate is closed. In no event shall such distance be less than thirty five (35) feet.

Intersecting public and private roads shall be located opposite each other where possible or be offset by a minimum of one hundred twenty five (125) feet.

Driveways shall have an all weather driving surface. In the case of a native material road, the driveway shall match the existing surface.

Driveways shall have a minimum surface width of 18 feet at the edge of pavement or road surface and taper to 16 feet at a distance 6 feet from the edge of the road and maintain this surface width to the end of the driveway.

Driveways which are in excess of 600 feet in length and are single lane shall be required to have standard inter-visible turnouts. (See Appendix D).

Driveways at the End of the Road – Driveways 150' or longer in length that end at a private residence, a business or structure larger than 600 square feet, shall have a cul-de-sac, loop design or a "Y" or "T" turn around adequate to accommodate emergency service vehicles. "T" turnarounds shall be a minimum of 20' from any flammable structure. All turn around areas shall be kept open and clear, and shall have sufficient area for snow storage outside of road prism, and shall be plowed by the owner in the winter. (See Appendix E).

Driveway designs that allow for backing onto or off of a county road shall be evaluated on a case-by-case basis. Lot size, proposed house location and traffic volume and speed can be used as determining factors. The Director of Public Works will make the final determination.

Any driveway permit application that is over 250 feet in length and has the potential to be used for a road for future development may be referred to the planning office for proper review.

Driveways shall be constructed to meet all Standards and Specifications from the edge of the County road, or public road, or private road under County jurisdiction, to the building footprint.

Driveways on steep uphill or downhill will require a flat landing area for a minimum of 30 feet before the intersection with the edge of the road.

A temporary access road as defined herein shall be required to meet all Standards and Specifications only from the edge of the road to the property line.

Adequate vehicle parking must be provided on the private parcel. No parking along the road will be permitted.

Any overhead entry structures shall be at least 13' 6" high, measured from the road surface.

**Table 4-5 - Cut and Fill Slopes:**

| Height | Cut Slopes | Fill Slopes |
|---|---|---|
| 0-5 feet | 3:1 | 2:1 |
| 5-10 feet | 2:1 | 1 1/2:1 |
| 10-15 feet | 1 1/2:1 | 1 1/2:1 |
| Above 15 feet | 1:1 | 1 1/2:1 |

**Table 4-6 - Summary of Driveway Design Elements:**

| TYPE OF ACCESS (driveway) | # OF LANES | LANE WIDTH |
|---|---|---|
| 1. **Residential** | 1 | 16 feet |
| 2. **Agricultural** | 1 | 16 feet |
| 3. **Commercial** | 2 | 11 feet |
| 4. **Industrial** | 2 | 11 feet |

**Table 4-7 - Intersection Sight Distance**

| *Vehicle expected to enter or cross highway | Sight Distance is given in feet per 10 mph of posted speed limit | |
|---|---|---|
| | 2 Lane | 4 Lane |
| Passenger Car | 100 | 120 |
| Single Unit Truck | 130 | 150 |
| Multi-Unit Trucks | 170 | 200 |

**The US Fish and Wildlife provided the following written guidance with regard to development and site disturbance activity within Gunnison sage-grouse designated critical habitat on December 22, 2014:**

"Based on the information currently available to us, we do not expect projects falling into the categories below to result in take. Therefore, they would not need any review from us, and your permitting may continue to follow established county procedures:

- Development in areas outside of designated critical habitat (shapefiles available on our website at: http://www.fws.gov/coloradoES/ ), (unless new areas become occupied by Gunnison sage-grouse in the future). This includes the City of Gunnison urban area, which has been excluded from our critical habitat designation because it lacks sage-grouse habitat.
- Building projects falling within the boundaries of a CCAA or Conservation Easement existing prior to the effective listing date of Gunnison sage-grouse that are consistent with the terms of the CCAA or conservation easement.
- Routine repair and maintenance activities to existing buildings and infrastructure, such as the replacement of a roof, septic tank, or shed.
- Minor new structures within existing developed or disturbed areas, such as a new garage, shed, or other outbuildings adjacent to an existing, larger structure.
- Development on private land is unoccupied critical habitat (note an ESA section 7 consultation may be required if there is a Federal permit or funding involved.

Projects not meeting the criteria above should be submitted to our Grand Junction office for review. Submittals should include a description of the proposed project, a description of the habitats proposed to be disturbed, information about nearby Gunnison sage-grouse leks, if known, and a description of existing disturbances in adjacent areas. Maps, aerial photos, and ground photos are helpful in describing the existing conditions of the property proposed to be disturbed and adjacent properties. Electronic submittals can be sent to GrandJunctionES@fws.gov. Paper copies can be mailed to: Ecological Services, 445 W. Gunnison Ave, Suite 240, Grand Junction, CO 81501.

**Notes:**

- Mr. Kurt Broderdorp is currently the acting supervisor and can be reached at 970-628-7186."
- Gunnison County provides the above mentioned statement from the USFWS for your reference only.