S Dominguez Gunnison County, CO 587610
11/12/2008 03:13 PM Pg: 1 of 43
447 R: $0.00 D: $

BOARD OF COUNTY COMMISSIONERS
OF THE COUNTY OF GUNNISON, COLORADO
RESOLUTION NO: 08-47

A RESOLUTION ADOPTING THE 2003 INTERNATIONAL FIRE CODE WITH AMENDMENTS THERETO AND THE CRESTED BUTTE FIRE PROTECTION DISTRICT'S "GUIDELINES, STANDARDS AND FEES FOR THE REVIEW OF FIRE PROTECTION IN PROPOSED INCLUSIONS TO THE CRESTED BUTTE FIRE PROTECTION DISTRICT, AND NEW SUBDIVISIONS, P.U.D.S OR ANY OTHER BUILDABLE PARCEL OF LAND WITHIN THE CRESTED BUTTE FIRE PROTECTION DISTRICT" AND AMENDMENTS THERETO, WITHIN THE CRESTED BUTTE FIRE PROTECTION DISTRICT

WHEREAS, on August 9, 2005, the Crested Butte Fire Protection District (herein "CBFPD") adopted Resolution No: 1, Series 2005, "A Resolution Adopting and Amending the 2003 International Fire Code, Prescribing Regulations Governing Conditions Hazardous to Life and Property from Fire, Hazardous Uses or Explosion, Establishing a Department of Fire Prevention and Providing Officers Therefor and Defining their Powers and Duties" as identified in Appendix "A" attached hereto and incorporated herein; and

WHEREAS, CBFPD's adoption of the 2003 International Fire Code (herein "Fire Code") by Resolution No: 1, Series 2005 also amended the Fire Code with revisions to certain sections and on March 21, 2008, the CBFPD approved further amendments to the Fire Code as identified in Appendix "B" attached hereto and incorporated herein; and

WHEREAS, the CBFPD has also adopted "Guidelines, Standards And Fees For The Review of Fire Protection In Proposed Inclusions To The Crested Butte Fire Protection District, And New Subdivisions, P.U.D.s Or Any Other Buildable Parcel Of Land Within The Crested Butte Fire Protection District", revised August 9, 2005 (herein "Guidelines and Standards") as identified in Appendix "C" attached hereto and incorporated herein which was amended on March 21, 2008 as identified in Appendix "D" attached hereto and incorporated herein; and

WHEREAS, pursuant to C.R.S. §32-1-1002(1)(d), no code shall apply within any municipality or the unincorporated portion of any county unless the governing body of the municipality or county as the case may be, adopts a resolution stating that such code or specific portions shall be applicable within the fire protection district's boundaries; and

WHEREAS, the Gunnison County Planning Commission has reviewed and recommended to the Board of County Commissioners of the County of Gunnison, Colorado (herein the "Board") approval of the Fire Code as amended and with certain changes, amendments and substitutions, as set forth in the August 1, 2008 "Proposed Language for Automatic Fire Sprinkler System Requirements in CBFPD Guidelines & Standards", as identified in Appendix "E" attached hereto and incorporated herein, approval of the CBFPD's Guidelines and Standards; and

WHEREAS, the Gunnison County Public Works Department has also reviewed CBFPD's Guidelines & Standards and with certain changes, amendments and substitutions as identified in Appendix "F" attached hereto and incorporated herein, has recommended to the Board, approval of the CBFPD's Guidelines & Standards; and

WHEREAS, the Board has reviewed and determined that adoption of the Fire Code as amended and with certain changes, amendments and substitutions, adoption of CBFPD's Guidelines and Standards, would be in the best interests of the citizens of Gunnison County residing within the Crested Butte Fire Protection District; and

NOW THEREFORE, BE IT RESOLVED by the Board of County Commissioners of the County of Gunnison, Colorado pursuant to C.R.S. §32-1-1002(1)(d), that the "2003 International Fire Code" with the amendments identified in Appendix "A" and Appendix "B" attached hereto and incorporated herein and the "Guidelines, Standards And Fees For The Review of Fire Protection In Proposed Inclusions To The Crested Butte Fire Protection District, And New Subdivisions, P.U.D.s Or Any Other Buildable Parcel Of Land Within The Crested Butte Fire Protection District", revised August 9, 2005 as identified in Appendix "C" attached hereto and incorporated herein with amendments as identified in Appendix "D" attached hereto and incorporated herein and with the recommended changes, amendments and substitutions, as identified in Appendix "E" and Appendix "F" attached hereto and incorporated herein are hereby adopted for the area lying within the Crested Butte Fire Protection District.

FURTHERMORE, this resolution repeals and supersedes any and all other resolutions regarding prior adopted codes by the Crested Butte Fire Protection District.

INTRODUCED by Commissioner Starr, seconded by Commissioner Swenson, and adopted this 11th day of November, 2008.

BOARD OF COUNTY COMMISSIONERS
OF THE COUNTY OF GUNNISON, COLORADO

By _____
Hap Channell, Chairperson

By _____
Paula Swenson, Vice Chairperson

By _____
Jim Starr, Commissioner

ATTEST:

_____
Deputy County Clerk

GUNNISON COUNTY SEAL COLORADO

CRESTED BUTTE FIRE PROTECTION DISTRICT
Resolution 1
Series 2005

A RESOLUTION ADOPTING AND AMENDING THE 2003 INTERNATIONAL FIRE CODE, PRESCRIBING REGULATIONS GOVERNING CONDITIONS HAZARDOUS TO LIFE AND PROPERTY FROM FIRE, HAZARDOUS USES OR EXPLOSION, ESTABLISHING A DEPARTMENT OF FIRE PREVENTION AND PROVIDING OFFICERS THEREFOR AND DEFINING THEIR POWERS AND DUTIES.

WHEREAS, the Board of Directors (herein "Board") of the Crested Butte Fire Protection District (herein "District") deems it necessary to adopt the following code for the purpose of establishing rules of conduct and standards for the protection of life, health, property, security and welfare of the inhabitants of the District; and

WHEREAS, the Board has considered the effect of fire code enforcement within the boundaries of the District and has determined that enforcement of the proposed code would not cause undue hardship or suppression of economic growth within the District; and

WHEREAS, the Board has studied the necessity for realistic and reasonable level of fire protection to be provided by a rural fire protection district which also includes National Forest, BLM, Colorado State land, unincorporated Gunnison County land, municipalities, large expanses of agricultural land, remote outlying single family residences, some areas of medium to high density residential development, mineral and natural resources extraction, aviation facilities and including some industrial and commercial activities;

NOW, THEREFORE, BE IT RESOLVED THAT:

Section 1. That a certain document, three (3) copies of which are on file in the office of the District Manager of the District, being marked and designated as the ***International Fire Code***, 2003 edition, including Appendix Chapters B, C, D, E, F & G, as published by the International Code Council, be and is hereby adopted as the Fire Code of the District, in the State of Colorado regulating and governing the safeguarding of life and property from fire and explosion hazards arising from the storage, handling and use of hazardous substances, materials and devices, and from conditions hazardous to life or property in the occupancy of buildings and premises as herein provided; providing for the issuance of permits and collection of fees therefore; and each and all of the regulations, provisions, penalties, conditions and terms of said Fire Code on file in the office of the District are hereby referred to, adopted, and made a part hereof, as if fully set out in this resolution, with the additions, insertions, deletions and changes, if any, prescribed in Section 2 of this resolution. State and EPA regulations shall take precedence if there is a conflict with any International Fire Code regulations pertaining to the use, storage, handling of, manufacture of, or dispensing of flammable and combustible liquids, cryogenic materials, aerosols, compressed gases, corrosive materials, explosives and fire works, flammable gases and solids, highly toxic and toxic materials, liquefied petroleum gases, organic peroxides, oxidizers, pyrophoric materials, pyroxylin (cellulose nitrate) plastic, unstable (reactive) materials, water reactive solids and liquids, or any other material which may be characterized or become known as a Hazardous Material.

Section 2. That the followings sections are hereby revised:

SECTION 101 GENERAL

101.1 Title. Insert, [Crested Butte Fire Protection District]

SECTION 102 APPLICABILITY

APPENDIX A

102.6 Referenced Codes and Standards and **102.7 Subjects not regulated by this code**. Add, "The most current NFPA edition shall be utilized."

SECTION 106 INSPECTIONS

Add, "**106.4 Requests for inspections.** Requests for inspections shall be submitted at least five (5) working days prior to the date of the requested inspections."

SECTION 108 BOARD OF APPEALS

108.1 Add, "The Board of Directors of the District shall be considered as the Board of Appeals."

SECTION 109 VIOLATIONS

109.3 Violation penalties. Insert, "...shall be guilty of a [misdemeanor], punishable by a fine of not less than [50.00] dollars nor more than [1,000.00] dollars or by imprisonment not exceeding [1 year], or both such fine and imprisonment."

SECTION 111 STOP WORK ORDER

111.4 Failure to Comply. Insert, "...shall be liable to a fine of not less than [50.00] dollars or more than [1.000.00] Dollars."

SECTION 508 FIRE PROTECTION WATER SUPPLIES

Add, "**508.1.1 Inadequate Water Supply.** Where required fire flows cannot be provided, an approved fire suppression system complying with Section 9 of this code and the Guidelines & Standards of the District shall be installed throughout every occupancy and structure within the boundaries of the District."

508.5.4 Obstruction. Add, "Snow and/or snow removal operations shall not prevent fire hydrants from being immediately discernible or hinder gaining immediate access."

SECTION 603 FUEL-FIRED APPLIANCES

603.9 Gas Meters. Add, "Locations of gas meters, regulators and piping shall comply with this section and the Guidelines & Standards of the District."

SECTION 903 AUTOMATIC SPRINKLER SYSTEMS

903.2.1.2 Group A-2. Amend sentence, "...occupant load of 100 or more."

903.4 Sprinkler system monitoring and alarms. Add to existing sentence, "Automatic sprinkler systems protecting one, two or multiple family dwellings that are not required to be centrally monitored shall comply with the Guidelines & Standards of the District for Early Warning & Alerting Devices."

Exceptions: Delete #1.

SECTION 907 FIRE ALARM AND DETECTION SYSTEMS

907.2.1 Group A. Replace existing sentence with, "A manual and automatic fire alarm system shall be installed in accordance with NFPA 72 in group A occupancies having an occupant load of 100 or more. Portions of Group E occupancies occupied for assembly purposes shall be provided with a fire alarm as required for the Group E occupancy."

Exceptions: Delete.

907.2.2 Group B. Replace existing sentence with, "A manual fire alarm system shall be installed in Group B occupancies having an occupant load of 100 or more persons or more than 50 persons above or below the lowest level of exit discharge."

Exceptions: Delete.

907.2.7 Group M. Exceptions: Delete.

907.2.8.1 Manual fire alarm system. Exceptions: Delete.

907.2.8.2 Automatic fire alarm system. Replace existing sentence with, "An automatic fire alarm system shall be installed throughout all interior corridors serving guestrooms, all common areas, laundry rooms, and mechanical rooms."

907.4.1 Location. Exceptions: Delete.

SECTION 1026 MEANS OF EGRESS FOR EXISTING BUILDINGS

1026.5 Illumination emergency power. 2. Replace existing sentence with, "Group B buildings three or more stories in height or buildings with 100 or more total occupants."

SECTION 3301 GENERAL

3301.2.4 Financial responsibility. Replace the word "jurisdiction" with "District".

SECTION 3803 INSTALLATION OF EQUIPMENT

3803.3 Location of equipment and piping. Add 2nd sentence to read, "Locations of gas meters, regulators and piping shall comply with this section and the Guidelines & Standards of the District."

CHAPTER 45 REFERENCED STANDARDS

Add to 1st paragraph, "The most current NFPA edition shall be utilized." Add a bold subsection titled, "**CBFPD**-The most current edition of the *Guidelines, Standards And Fees For The Review Of Fire Protection In Proposed Inclusions To The Crested Butte Fire Protection District, And New Subdivisions, P.U.D.s Or Any Other Buildable Parcel Of Land Within The Crested Butte Fire Protection District.* (Herein 'Guidelines & Standards of the District')"

APPENDIX B, FIRE-FLOW REQUIREMENTS FOR BUILDINGS

B103 MODIFICATIONS

Add, "**B103.1.1 Inadequate Water Supply.** Where required fire flows cannot be provided, an approved fire suppression system complying with Section 9 of this code and the Guidelines & Standards of the District shall be installed throughout every occupancy and structure within the boundaries of the District."

APPENDIX D, FIRE APPARATUS ACCESS ROADS

D101 GENERAL

D101.1 Scope. Change to read, "Fire apparatus access roads shall be in accordance with this appendix, the Guidelines & Standards of the District and all other applicable requirements of the ***International Fire Code***."

D103 MINIMUM SPECIFICATIONS

D103.1 Delete and change to read, "Minimum specifications for fire apparatus access roads shall comply with the Guidelines & Standards of the District."

D103.2 Delete

D103.3 Delete

D103.4 Delete

D103.5 Delete

D103.6 Signs. Change to **D103.2.**

Section 3. That the geographic limits referred to in certain sections of the 2003 ***International Fire Code*** are hereby established as follows:

SECTION 3204 STORAGE

3204.3.1.1 Location. Replace second paragraph with, "Storage of flammable cryogenic fluids in stationary containers is prohibited within the boundaries of the District upon parcels with a population density of one living unit or greater per acre. In the event of a conflict with Colorado State or Federal EPA regulations the more stringent regulations shall apply."

Exception: Tanks legally in existence at the time of the adoption of this resolution, providing they do not pose undo fire or safety hazards."

SECTION 3404 STORAGE

3404.2.9.5.1 Locations where aboveground tanks are prohibited. Replace existing sentence with, "Storage of Class I and Class II liquids in aboveground tanks outside of buildings is prohibited within the boundaries of the District upon parcels with a population density of one living unit or greater per acre. In the event of a conflict with Colorado State or Federal EPA regulations the more stringent regulations shall apply.

Exception: Tanks legally in existence at the time of the adoption of this resolution, providing they do not pose undo fire or safety hazards."

SECTION 3406 SPECIAL OPERATIONS

3406.2.4.4 Locations where aboveground tanks are prohibited Replace existing sentence with, "Storage of Class I and Class II liquids in aboveground tanks is prohibited within the boundaries of the District upon parcels with a population density of one living unit or greater per

acre. In the event of a conflict with Colorado State or Federal EPA regulations the more stringent regulations shall apply.

Exception: Tanks legally in existence at the time of the adoption of this resolution, providing they do not pose undo fire or safety hazards."

SECTION 3804 LOCATION OF CONTAINERS

3804.2 Maximum capacity within established limits. Replace existing sentence with: "Within the boundaries of the District, restricting the storage of liquefied petroleum gas for the protection of heavily populated or congested areas, the aggregate capacity of any one installation shall not exceed a water capacity of 2,000 gallons."

Section 4. That Resolution No.1, Series 1995 of the District adopting the 1991 Uniform Fire Code, Resolution No.1, Series 2004 of the District adopting the 1997 Uniform Fire Code, and all other resolutions or parts of resolutions in conflict herewith are hereby repealed.

Section 5. That if any section, subsection, sentence, clause or phrase of this resolution is, for any reason, held to be unconstitutional; such decision shall not affect the validity of the remaining portions of this resolution. The District hereby declares that it would have passed this resolution, and each section, subsection, clause or phrase thereof, irrespective of the fact that any one or more sections, subsections, sentences, clauses and phrases be declared unconstitutional.

Section 6. That nothing in this resolution or in the Fire Code hereby adopted shall be construed to affect any suit or proceeding impending in any court, or any rights acquired, or liability incurred, or any cause or causes of action acquired or existing, under any act or resolution hereby repealed as cited in Sections 2 & 4 of this ordinance; nor shall any just or legal right or remedy of any character be lost, impaired or affected by this resolution.

Section 7. That the District Manager is hereby ordered and directed to cause this resolution to be published.

Section 8. That this resolution and the rules, regulations, provisions, requirements, orders and matters established and adopted hereby shall take effect and by in full force and effect on the date when the governing bodies of Gunnison County and/or the municipalities of Crested Butte and Mt Crested Butte pass this resolution from and after the date of its final passage and adoption.

Section 9: DATE OF EFFECT.

This resolution shall take effect and be enforced within incorporated municipalities and unincorporated portions of Gunnison County from and after its approval as set forth in section 32-1-1002(1)(d), C.R.S.

Adopted this 9th day of August, 2005

CRESTED BUTTE FIRE PROTECTION DISTRICT

By _____
Jeffery Neumann, President and Chairperson

ATTEST:

_____
Hank Smith, Secretary

S Dominguez Gunnison County, CO 587610
11/12/2008 03:13 PM Pg: 8 of 43
447 R: $0.00 D: $

APPROVED—3/21/08

AMENDMENT TO 2003 INTERNATIONAL FIRE CODE
CHAPTER 7
FIRE-RESISTANCE-RATED CONSTRUCTION

ADD:

NEW

SECTION 705
GARAGES AND CARPORTS

705.1 Area separation. In the one-hour occupancy separation between Group R, Division 3 and Group U Occupancies, the separation may be limited to the installation of materials approved for one-hour fire-resistive construction on the garage side and a self-closing, tightfitting, gasketed solid-wood door 1 3/8 inches in thickness, or a self-closing, tightfitting, gasketed door assembly having a fire-protection rating of not less than 20 minutes.

CHAPTER 10
MEANS OF EGRESS
SECTION 1006
MEANS OF EGRESS ILLUMINATION

ADD:

NEW

1006.5 Floor-level Exit Signs. Where the Building Code requires exit signs, additional approved low-level exit signs that are internally or externally illuminated, photo luminescent or self-luminous, shall be provided in all corridors serving guest rooms of hotels in Group R, Division 1 and Division 2 Occupancies. The bottom of such signs shall not be less than 6 inches (152 mm) nor more than 8 inches (203 mm) above the floor level and shall indicate the path of exit travel. For exit and exit-access doors, the sign shall be on the door or adjacent to the door with the closest edge of the sign within 4 inches (102 mm) of the doorframe.

S Dominguez Gunnison County, CO 587610
11/12/2008 03:13 PM Pg: 9 of 43
447 R: $0.00 D: $

APPROVED—3/21/08

AMENDMENT TO 2003 INTERNATIONAL FIRE CODE
APPENDIX B
FIRE-FLOW REQUIREMENTS FOR BUILDINGS
SECTION B103
MODIFICATIONS

ADD:

B103.4 Buildings without minimum fire-flow requirements. Any building not serviced by a water supply system capable of providing the minimum fire-flow requirements shall install an approved automatic sprinkler system.

Exceptions: Isolated rural buildings shall be exempt if any of the following conditions apply:

1. Emergency vehicle access to the property is seasonal.
2. The property is located beyond maintained roads.
3. The property is located beyond emergency vehicle access.
4. The property is not served with electricity by a public utility.

B103.4.1 New buildings. All new buildings regardless of floor area. For the purpose of this section, the floor area within the surrounding exterior walls shall be considered as one building. Area separation walls shall not be used in calculating allowable floor area for sprinkler requirements. In occupancies of a hazardous nature or where special hazards exist, reference 2003 IFC § 901.4.3.

Exceptions:

1. Detached carports and greenhouses
2. Sheds and auxiliary structures not used for human habitation. See definition for Habitable Space.
3. When expenditures are strictly related to repair or maintenance of an existing building.

B103.4.2 Existing buildings. Throughout existing and new sections of any existing building whenever total additions resulting in an increase of the original floor area by more than 50 percent, or whenever total additions result in an increase of more than 1,000 square feet in the total floor area, including mezzanines or additional stories, or whenever alterations to existing building exceed 50 percent of the replacement value, as determined by the building official. Alteration values and additional floor area shall be cumulative with each issuance of a building permit, regardless of any change in ownership.

Exceptions:

1. Detached carports and greenhouses
2. Sheds and auxiliary structures not used for human habitation. See definition for Habitable Space.
3. When expenditures are strictly related to repair or maintenance of an existing building.

B103.4.3 Change of occupancy. For all existing and new sections of an existing building for which there is an occupancy classification change.

S Dominguez Gunnison County, CO 587610
11/12/2008 03:13 PM Pg: 10 of 43
447 R: $0.00 D: $

Guidelines, Standards And Fees For The Review Of Fire Protection In Proposed Inclusions To The Crested Butte Fire Protection District, And New Subdivisions, P.U.D.s Or Any Other Buildable Parcel Of Land Within The Crested Butte Fire Protection District

Revised August 9, 2005

APPENDIX C

Table of Contents

		Page
SECTION 1	GENERAL REQUIREMENTS	4
101.	Inclusion of Property	4
102.	Plans Submittal	4
103.	Conflicting Provisions	4
SECTION 2	ACCESS REQUIREMENTS	4
201.	Access	4
202.	Road Grades	5
203.	Access Roads	5
204.	Cul-de-sacs and Turn-arounds	6
205.	Driveways	6
206.	Bridges and Low Water Crossings	8
SECTION 3	WATER SUPPLY REQUIREMENTS	8
301.	Central Water Supply	8
302.	Hydrants	8
303.	Water Sources	8
304.	Annual Certification	9
SECTION 4	FIRE SUPRESSION SYSTEM REQUIREMENTS	9
401.	Access Deficiencies	9
402.	Water Supply Deficiencies	9
SECTION 5	WILDLAND FIRE MITIGATION	10
501.	Compliance With Existing or Other Standards	10
SECTION 6	UTILITIES	10
601.	Review and Approval of Gas Service Location	10
602.	Excavation	11
603.	Early Warning And Alerting Devices	11
604.	Protection of Meters and Service Lines	11
SECTION 7	REVIEW AND APPROVAL BY THE FIRE CHIEF AND THE BOARD OF DIRECTORS	11
701.	Review	11
702.	Approval	12
703.	Waivers	12

SECTION 8 FEES 13

801. Plan Review Fee Schedule 13
802. Fire Suppression System Review Fee Schedule 14

SECTION 9 DEFINATIONS AND ABREVIATIONS 14

APPENDIX A SUMMARY OF ACCESS ROAD AND DRIVEWAY ELEMENTS 19
APPENDIX B STANDARD TURNAROUND OPTIONS 20
APPENDIX C TYPICAL TURNOUTS 21
APPENDIX D REVIEW FEES 22

SECTION 1. GENERAL REQUIREMENTS

101. Inclusion of Property

A. The owner or developer of proposed inclusion of property to the Crested Butte Fire Protection District shall conform to the requirements set forth in Section 32, part IV, INCLUSION OF TERRITORY, of the Colorado Revised Statutes.

102. Plans Submittal

A. The owner or developer of each inclusion, subdivision, P.U.D. or each buildable parcel of land, shall submit a fire protection plan to the Crested Butte Fire Protection District for review and approval. The Plan shall consist of plans, specifications, covenants, deed restrictions and contracts as deemed necessary by the Fire Chief to show compliance with Sections 2 through Section 8 of this resolution.

103. Conflicting Provisions

A. Where there is a conflict between a general requirement and a specific requirement, the specific requirement shall be applicable. Where there is a conflict between the Crested Butte Fire Protection District Guidelines and Standards, Colorado State or Federal EPA regulations, and any other applicable municipal or Gunnison County requirements, the more stringent requirement shall apply.

SECTION 2. ACCESS REQUIREMENTS

201. Access

A. All fire apparatus access roads shall comply with the Guidelines and Standards of the Crested Butte Fire Protection District and Appendix D of the 2003 International Fire Code, as amended.
B. Roads, streets and ways, whether public or private, shall provide for safe simultaneous access for emergency vehicles and civilian evacuation. The Crested Butte Fire Protection District shall be permitted to allow modification of access requirements where the structures being protected are provided with centrally monitored fire protection systems.
C. All developments are encouraged to provide two or more points of dedicated access on primary roads that permit adequately separated ingress/egress. The design of access routes shall consider traffic circulation and employ looped road networks. See Gunnison County LUR Section 5-307 B 1 and Appendix D of the 2003 International Fire Code.
D. All structures located within the boundaries of the Crested Butte Fire Protection District, shall have access roads with all weather driving surfaces capable of supporting the imposed loads of emergency apparatus.
E. Streets and roads shall be identified with approved signs. All road identification signs and supports located within the Urban-Wildland interface shall be of non-combustible materials. All road identification signs shall be visible from both directions of travel. Temporary signs shall be installed at each street intersection when construction of new roadways allows passage by vehicles. Temporary signs shall be of an approved size, weather resistant and be maintained until replaced by permanent signs. All required road signs and traffic control

devices shall be installed in accordance with the Manual of Uniform Traffic Control Devices, current edition. No road names or numbers shall be used which will duplicate, or be confused with, the names of any existing street or road in the Crested Butte Fire Protection District. If the road name or number is for a road that has not been accepted by Gunnison County for maintenance, the applicant, homeowner's association, or the developer of the affected road is responsible for the road name or number sign(s).

F. New and existing buildings shall have approved address numbers, building numbers, or approved building identification placed in a position to be plainly legible and visible from the street or road fronting the property. If the identification on a building cannot be plainly seen from the street or road fronting the property, then redundant identification shall be provided at the entrance to the driveway or access road. Identification of buildings shall contrast with their background. Address identification shall be Arabic numerals or alphabet letters. Numbers and/or letters shall be a minimum of 4 inches high with a minimum stroke width of 0.5 inch.

G. Where multiple addresses are required at a single driveway, they shall be mounted on a single post, and additional signs shall be posted at locations where driveways divide.

202. Road Grades

A. Normal road grades shall not exceed 11 percent.
B. Sections not exceeding 300 feet may be allowed a maximum grade of 12 percent, if approved by the Fire Chief.
C. Sections exceeding 11 percent shall not be within 500 feet of each other.
D. Curves with centerline radius of less than 250 feet shall not exceed 8 percent grade.
E. In flat or rolling terrain, all grades shall flatten to 4 percent for at least 100 feet approaching intersections, and for at least 50 feet entering and leaving turn-arounds or cul-de-sacs. In mountainous terrain, all grades shall flatten to 6 percent or less for at least 50 feet approaching intersections and entering switchbacks or cul-de-sacs. Note: Flat or rolling terrain is defined as 15 % average cross slope, mountainous terrain is defined as greater than 15% average cross slope.

203. Access Roads

A. Shall meet the requirements of Section 2.
B. All access roads shall receive a functional classification as determined by the appropriate municipal public works or planning department official or the Director of Gunnison County Public Works Department.
C. All access roads with an ADT of 200 or more shall have a driving surface of 24 feet. Access roads with an ADT of 91-199 shall have a driving surface of 22 feet. Access roads with an ADT of 21-90 shall have a driving surface of 16 feet. See Appendix A.
D. All access roads shall be constructed to meet all municipal guidelines and standards for road and bridge construction and/or Gunnison County Standards and Specifications For Road and Bridge Construction.
E. All access roads shall have a minimum inside turning radius of 40 feet.
F. The required width of primary access roadways shall not be obstructed in any manner, including the parking of vehicles. **"NO PARKING"** signs and/or other appropriate notices prohibiting obstructions may be required and shall be maintained.
G. The access roadway shall be extended to within 150 feet of all portions of the exterior walls of the first story of any building.

Exception: Distance may be extended to 225 feet if the building has an approved fire suppression system and the Fire Department Connection is readily accessible.

H. All access roads in excess of 600 feet in length shall be required to have standard inter-visible turnouts. The location and spacing of inter-visible turnouts shall be determined on a case-by-case basis. See also "Inter-visible Turnout" and Appendix C.

I. All access roads in excess of 150 feet in length that do not connect or intersect with other roads shall have a cul-de-sac, loop design, a "Y" or a "T" turn-around at the end of the access road segment. See Appendix B.

J. All access roads shall have a minimum vertical clearance of 13 feet-6 inches.

K. An access road approach that is gated shall be designed so that the longest vehicle using it can completely clear the traveled way when the gate is closed. In no event shall such distance be less than 35 feet. All gates shall open inward or upward. The clear opening through the gate shall be 2 feet wider than the traveled way. A siren activated opening device shall be installed to enable responding emergency units immediate passage through the gate. The Crested Butte Fire Protection District may be provided with an approved key or access code in lieu of a siren activated gate with the approval of the Fire Chief. All gates shall be installed with a "breakaway" construction feature in a manner that allows emergency vehicle access.

204. Cul-de-sacs and Turn-arounds

A. All cul-de-sacs and turn-arounds shall be constructed to meet all municipal guidelines and standards for road and bridge construction and/or Gunnison County Standards and Specifications For Road and Bridge Construction. See Appendix B.

B. A cul-de-sac or turn-around, which may be vacated in the future, shall be improved to the functional classification standard of the road for which it serves if access is provided to dwellings or other structures.

C. Cul-de-sacs, "T" and "Y" turn-arounds shall be a minimum of 20 feet and a maximum of 60 feet from any flammable structure and shall be approved on a case-by-case basis at the plan review phase.

D. Shall provide shoulders for drainage and snow storage. See Gunnison County Standards and Specifications For Road and Bridge Construction, Section 4.8 or the appropriate municipal guidelines.

205. Driveways

A. Access to all buildings must allow a fire apparatus to stage within 150 feet of all portions of the exterior walls of the first story of any building. This distance may be increased to 225 feet if the structure is protected by an approved fire suppression system. Access to any building must be obtained from within it's own building lot. In the event that a residential building lot is of a size and configuration that the staging requirement can be met from the access roadway, section 205 Driveways, B-W, shall not apply.

B. All driveways shall serve no more than 1 lot. See also definitions for "Access", "Driveway" and reference Gunnison County LUR Section 2-102, definition of "driveway".

C. All residential access driveways shall serve no more than 2 dwelling units. See also definitions for "Access", "Driveway", "Dwelling" and "Dwelling Unit".

D. All residential access driveways serving multifamily residences shall be reviewed to determine if a higher functional classification is appropriate. See Appendix A.

E. All driveways serving occupancies other than residences shall be reviewed on a case-by-case basis at the plan review stage.
F. All driveways shall have a minimum driving surface width of 16 feet.
G. All driveways shall be constructed in accordance with both an approved driveway permit and all applicable sections of these Guidelines, Standards and Fees. Access to a Gunnison County road or right-of-way must be obtained as described in Section 7.4 of the Gunnison County Standards and Specifications for Road and Bridge Construction. Access to a municipal road or right-of-way must be obtained from the appropriate municipal planning department.
H. All driveways shall be constructed to meet all municipal or Gunnison County Standards and Specifications for Road and Bridge Construction from the edge of the municipal, Gunnison County, public or private road under municipal or Gunnison County jurisdiction, to the building footprint.
I. All driveways shall be constructed of a hard all-weather driving surface, capable of supporting the weight of emergency vehicles.
J. All driveways shall have a maximum grade of 11 percent.
K. Driveways shall not exceed a grade of 4 percent for a minimum of 30 feet before the intersection with the edge of the road.
L. All residential access driveways that access a municipal or Gunnison County road or right-of-way, shall have a minimum surface width of 18 feet at the edge of the pavement or road surface, and taper to a minimum surface width of 16 feet at a distance of 6 feet from the edge of the road, and maintain this surface width to the edge of the building footprint.
M. All driveways shall be constructed with a minimum inside turning radius of 40 feet.
N. All driveways and approaches shall be constructed so that they shall not interfere with the drainage system of the roadway.
O. The horizontal axis of an approach to the roadway shall normally be at right angle to the centerline of the roadway and extend a minimum of 40 feet beyond the edge of the traveled way. An angle between 90 and 60 degrees shall be permitted if it can be shown that physical constraints exist that requires a new approach angle of less than 90 degrees. An angle of less than 60 degrees is not permitted.
P. All driveways in excess of 600 feet in length shall be required to have standard inter-visible turnouts. The location and spacing of inter-visible turnouts shall be determined on a case-by-case basis. See also "Inter-visible Turnout" and Appendix C.
Q. All driveways in excess of 150 feet in length shall have a loop design or approved turn around adequate to accommodate emergency service vehicles. Cul-de-sacs, "T" and "Y" turn-arounds shall be a minimum of 20 feet and a maximum of 60 feet from any flammable structure and shall be approved on a case-by-case basis at the plan check phase. See Appendix B.
R. All turn around areas shall be kept open and clear at all times and shall have sufficient area for snow storage outside of the road prism. It shall be the owner's responsibility to keep the area clear of snow in the winter. See Appendix B.
S. Any proposed driveway that is over 250 feet in length and has the potential to be used for a road for future development shall be referred to the appropriate municipal or Gunnison County planning department for proper review.
T. Vertical clearance for any overhead entry structures shall be at least 13 feet-6 inches high, measured from the road surface, and shall be maintained to the edge of the building footprint.
U. Adequate vehicle parking must be provided on the private parcel. No parking along the road, in turnouts or turn-arounds will be permitted.

V. Driveways located near an intersection shall be constructed so that the side nearest the intersection is no less than 100 feet from the centerline of the intersecting road for commercial/industrial access and 50 feet for residential access.
W. A driveway that is gated shall be designed in accordance with section 203 K.

206. Bridges and Low Water Crossings

A. Where a bridge or a low water crossing is required to be used as access, it shall be constructed and maintained in accordance with nationally recognized standards, the standards of the appropriate municipality, or Gunnison County Standards And Specifications For Road And Bridge Construction.
B. Bridges and low water crossings shall maintain a minimum clear roadway width equal to width of the approach road.
C. All bridges shall be designed for a live load sufficient to carry the imposed loads of emergency vehicles.
D. Bridges shall have their legal load limits plainly displayed at both entrances.

SECTION 3. WATER SUP PLY REQUIREMENTS

301. Central Water Supply

A. A central water supply is required when the subdivision density is greater than one dwelling unit per two acres.
B. The system shall supply the required fire flow as determined by the Fire Chief in accordance with computations using the currently adopted Fire Code appendix, as amended.
C. The minimum pipe size serving fire hydrants and domestic systems shall be 8 inches in diameter, unless an engineered study can provide certification that a looped 6-inch system will deliver adequate fire flows.
D. The system shall be approved, installed and tested prior to the issuing of any building permits.

302. Hydrants

A. Fire hydrants shall be located as required by the Fire Chief in accordance with the currently adopted Fire Code appendix, as amended.
B. The Fire Chief shall approve the location of all fire hydrants.
C. All fire hydrants on a central water supply shall be of the same manufacturer and have two 2 1/2 inch NST outlets with caps and one 4 1/2 inch NST outlet with cap. Each hydrant shall be supplied with an approved snow cover marker and shall be installed so that the outlets are no closer than 3 feet above finished grade.
D. All fire hydrants shall be installed with "Snow Country Risers".

303. Alternate Water Sources

A. In subdivisions, P.U.D.s or any other buildable parcel of land within the Crested Butte Fire Protection District without a central water supply, an alternate water source approved by the Fire Chief shall be established to provide the required storage. NFPA 1142 *Standard On Water Supplies For Suburban And Rural Fire Fighting,* current edition, shall be used as a guide in establishing requirements.

304. Annual Certifications

A. For all water sources other than an approved central water system, an annual certification shall be provided to the Fire Chief to ensure a viable year-round water supply.

SECTION 4. FIRE SU PRESSION SYSTEM REQUIREMENTS

401. Access Deficiencies

A. Where the design criteria of sections 201-206 cannot be met, or any one of the following conditions exist:
   1. The fire department apparatus access roadways are obstructed by any of the following items:
      a. Low water crossings or,
      b. Security gates or,
      c. Speed bumps or,
   2. The building is located in a sub-division having a single fire apparatus access point or, Exception: developments of 30 or less total dwelling units that are compliant with all other sections of this Guidelines and Standards Policy.
   3. The access road is equal to or greater than a 12 percent grade or,
   4. The building site is more than 5 miles from the nearest fire station on an approved route as measured by the Fire Chief or,
   5. A fire hydrant capable of supplying the required fire flow is more than 500 feet from the building site or,
   6. When a variance has been granted by the Crested Butte Fire Protection District Board of Directors in areas of non-compliance,

   the following shall be provided as required by the Fire Chief:
   1. All structures shall have installed a fire suppression system in accordance with NFPA 13 *Standard for the Installation of Sprinkler Systems*, 13D *Standard for the Installation of Sprinklers Systems in One- and Two-Family Dwellings and Manufactured Homes* or 13R *Standard for the Installation of Sprinklers Systems in Residential Occupancies up to and Including Four Stories in Height,* current edition, by covenant and,
   2. Installed fire protection systems shall be monitored and supervised by an approved central station fire alarm company and,
   3. The size of the storage tank shall be double the required amount per the applicable NFPA standard or based on 30 gallons per minute response time, at posted speed limits, measured from the nearest fire station, whichever is greater.

402. Water Supply Deficiencies

A. Where the design criteria of sections 301-302 cannot be met, the following shall be provided as required by the Fire Chief:
   1. All structures shall have installed a fire suppression system in accordance with NFPA 13 *Standard for the Installation of Sprinkler Systems*, 13D *Standard for the Installation of Sprinklers Systems in One- and Two-Family Dwellings and Manufactured Homes* or 13R *Standard for the Installation of Sprinklers Systems in Residential Occupancies up to and Including Four Stories in Height,* current edition, by covenant and,

2. Installed fire protection systems shall be monitored and supervised by an approved central station fire alarm company and,
3. The size of the storage tank shall be double the required amount per the applicable NFPA standard or based on 30 gallons per minute response time, at posted speed limits, measured from the nearest fire station, whichever is greater.

SECTION 5. WILDLAND FIRE MITIGATION

501. Compliance With Existing or Other Standards

A. Subdivisions, P.U.D.s or any other buildable parcel of land in forested or other areas subject to wildland fires, shall comply with NFPA 1144 *Standard for Protection of Life and Property from Wildfire* current edition, NFPA 1141 *Standard for Fire Protection in Planned Building Groups* current edition and all Colorado State Forest Service recommendations.

SECTION 6. UTILITIE S

601. Review And Approval Of Gas Service Location

A. The Crested Butte Fire Protection District, the appropriate municipal or Gunnison County building department and the appropriate natural gas company representative shall approve all natural gas meter locations prior to installation.
B. The following requirements shall be used in determining the best location for gas meters:
    1. All gas meters shall be installed per the manufactures design specifications and all applicable codes and standards and,
    2. Shall be installed on a gable end and,
    3. Shall be installed 3-5 feet above finish grade and,
    4. Shall be permanently attached to a structure and,
    5. Shall not have any exposed horizontal runs and,
    6. Shall maintain 36 inches clearance from the gas meter and pressure relief valve to any electric meters, cable and telephone junction boxes, other ignition sources, operable windows and doors, exhaust vents or other penetrations.
C. The Crested Butte Fire Protection District, the appropriate municipal or Gunnison County building department and the appropriate propane vendor shall review and approve the location of all propane tanks prior to installation.
D. Underground propane tanks shall be installed below the level of the lowest gas-fired appliance in any given structure.
E. The Crested Butte Fire Protection District, the appropriate municipal or Gunnison County building department and the appropriate propane vendor shall approve the location of all propane service lines and pressure relief valves prior to installation. The same criteria for natural gas meter locations shall be used determine the best location for propane gas service lines and pressure relief valves.
F. All installations shall have on file at the Crested Butte Fire Protection District offices a signed agreement prior to the installation of any natural or propane gas service.

602. Excavation

A. All excavators shall contact the Utility Notification Center of Colorado and obtain the necessary utility locates **prior** to breaking ground.
B. The excavation contractor or operator shall be responsible for contacting and locating any utilities not notified by the Utility Notification Center of Colorado.
C. Excavation contractors shall comply with the "no dig" dates established by municipalities, Gunnison County and/or the appropriate utility company.
D. The ground shall be thawed before excavating.

603. Early Warning And Alerting Devices

A. The Fire Chief shall approve the location of all early warning and alerting (audio and visual) devices.
B. All occupancies shall have an approved CO-1 (carbon monoxide) gas detector installed. Said CO-1 gas detector may be interconnected with smoke detection devices.
C. All occupancies provided with propane gas service shall have an approved LEL (lower explosive level) gas detector installed at the lowest point in the crawl space, basement or lowest floor of the structure.
D. All occupancies provided with an approved LEL gas detector(s) shall be monitored and supervised by an approved central station monitoring company and/or a distinctly sounding horn. Exception: The LEL detector may be interlinked with the smoke detectors.
E. All occupancies provided with an automatic fire suppression system shall have a water flow alarm monitored and supervised by an approved central station monitoring company and shall have installed an exterior horn and strobe and an interior horn.

604. Protection of Meters And Service Lines

A. All gas meters and service lines shall be adequately protected from vehicular traffic, snow and ice damage. See section 601.

SECTION 7. REVIEW AND A PPROVAL BY THE FIRE CHIEF AND THE BOARD OF DIRECTORS

701. Review

A. Upon receipt of the fire protection plan submitted by proponents of any inclusion, subdivision, PUD or any other buildable parcel of land, the Fire Chief shall review the plan using the standards and guidelines contained herein, the appropriate edition of the Uniform Fire Code or International Fire Code, as amended and adopted by a municipality or Gunnison County, and any other recognized standards.
B. The Fire Chief shall prepare a written memo addressing the areas of compliance or variance from the standards and include a recommendation for the Board of Directors.
C. The Board shall review the fire protection plan for any inclusion, subdivision, PUD or any other buildable parcel of land, during a public meeting. Statute requires a public hearing for any inclusion; the board may request a public hearing for review of subdivisions or P.U.D.s.

702. Approval

A. The Board shall approve or deny the fire protection plan for any inclusion. The Board may require proponents to provide cash, land, equipment, buildings, or such other contributions as deemed necessary to insure that the Crested Butte Fire Protection District has sufficient equipment, resources, and manpower to serve the development without imposing an excessive burden on existing Crested Butte Fire Protection District taxpayers.
B. For subdivisions, P.U.D.s or any other buildable parcel of land, within the boundaries of the Crested Butte Fire Protection District, the Board shall direct the Fire Chief to prepare a written comment of the Crested Butte Fire Protection District's recommendation for the fire protection plan for the appropriate municipal or Gunnison County planning department. The Crested Butte Fire Protection District may request cash, land, equipment, buildings, or such other contributions necessary to mitigate the impacts upon existing equipment, resources, and manpower without imposing an excessive burden on existing Crested Butte Fire Protection District taxpayers.

703. Waivers

A. No waiver of these Guidelines and Standards shall be valid unless approved by the Board in writing as set forth in this section.
B. Only the Board may approve a waiver of these Guidelines and Standards except that the Fire Chief has the limited authority to waive these Guidelines and Standards only for a driveway or for an insignificant extension of an existing road; the Fire Chief may refer such waivers to the Board. The Board, or if applicable, the Fire Chief, may place special conditions on the approval of a waiver. Such conditions may relate to the following:
    1. Access and,
    2. Water Supply and,
    3. Seasonal use and,
    4. Number of structures and,
    5. Size of structures and,
    6. Location of structures and,
    7. Defendable space and,
    8. Type of use and,
    9. Existence of public utilities and,
    10. No increased risk to emergency services personnel, without limitation.
C. A waiver shall be project specific and shall not establish a precedent for any other proposed waiver.
D. No waiver shall be granted unless and until all applicable review fees have been paid to the Crested Butte Fire Protection District.
E. A request for a waiver must be made in writing and identify the following:
    1. The name, address and telephone number of the applicant and,
    2. Identification of the subject property and road and,
    3. A specific description of the requested waiver (including relevant, proposed construction plans) and,
    4. A detailed explanation of why the proposed waiver is warranted by site specific conditions that make compliance with these Guidelines and Standards technically unfeasible and,
    5. A detailed explanation of why the proposed waiver:

a. Would not adversely affect the safe, efficient and orderly movement of motorized and non-motorized traffic and,
b. Would not adversely affect health or safety and,
c. Would not cause substantial injury to the owner or occupant of adjacent land(s) and,
d. The waiver will not cause an increased risk to emergency services personnel, without limitation and,
e. Would not cause substantial injury to the environment and,
f. Would provide the functional equivalent of these Guidelines and Standards and,

6. Any other information required by the Board or Fire Chief (e.g. survey or technical opinion and report).

E. No public hearing is required for a determination of a waiver by the Fire Chief.

F. Within fourteen days of receipt by the Board of a complete petition for waiver, to be determined by the Board, the Board shall set a date, time and place for a public hearing on that petition. The Board shall publish, at a minimum, notice of such hearing once a week, for the two consecutive weeks immediately before the hearing. The applicant for the waiver must notify all adjacent property owners, no later than fourteen days before the hearing, by mailing to each of them, by certified mail, return receipt requested, a complete copy of the request for a waiver and a copy of the notice of the public hearing; the applicant must provide proof of such notification to the Fire Chief at least seven days prior to the public hearing.

G. No waiver shall be granted unless the Board, or if applicable the Fire Chief, determines in writing the applicant has established by clear and convincing evidence that:

1. The waiver is warranted by site specific conditions that make compliance with these Guidelines and Standards technically unfeasible and,
2. The waiver will not adversely affect the safe, efficient and orderly movement of motorized and non-motorized traffic and,
3. The waiver will not adversely affect health or safety and,
4. The waiver will not cause substantial injury to the owner or occupant of adjacent land(s) and,
5. The waiver will not cause an increased risk to emergency services personnel, without limitation and,
6. The waiver will not cause substantial injury to the environment and,
7. The proposal will provide the functional equivalent of these Guidelines and Standards.

SECTION 8. FEES

801. <u>Plan Review Fee Schedule</u>

A. The owner or developer of each proposed Inclusion, Subdivision, P.U.D. or any other buildable parcel of land, that requires a plan review, shall submit a plan review fee based on $100.00 per hour, prior to the acceptance of the Fire Protection Plan.

B. The owner or developer of each proposed Inclusion, Subdivision, P.U.D. or any other buildable parcel of land, that requires a plan review, shall submit a minimum plan review fee of $500.00 at the time of submittal.

C. The minimum plan review fee shall be credited against the total plan review fee.

802. Fire Suppression System Review Fee Schedule

A. A fire suppression system review fee shall be based according to Appendix D.
B. The owner or developer of any structure that requires a fire suppression system shall submit a minimum plan review fee of $50.00 at the time of submittal.
C. The minimum plan review fee shall be credited against the total plan review fee.
D. All fire suppression systems (i.e. fire sprinkler and kitchen exhaust hoods) and miscellaneous appliances shall be reviewed and approved at the plan review stage.

SECTION 9. DEFINITIONS & ABBREV IATIONS

Access means the place, method or way by which vehicles and pedestrians obtain usable ingress and egress to a property or land use:

- **Residential Access** means ingress or egress to no more than 2, residential units, including any that includes a home occupation or multi-family residence. Residential access is a private vehicular access, for the exclusive use of the owners-occupants and their invitees, and is not considered a road or highway.
- **Agricultural Access** means the access providing ingress and egress exclusively to an agricultural operation and not to any residence(s).
- **Commercial Access** means the access providing ingress and egress to any activity defined by municipal guidelines or the Gunnison County Land Use Resolution as commercial.
- **Industrial Access** means the access providing ingress and egress to any activity defined by municipal guidelines or the Gunnison County Land Use Resolution as industrial.

Access Road See "Access".

Agricultural Operation means an activity that primarily involves agriculture as defined herein.

Agricultural Road means any road whose primary use is to serve an agricultural operation.

Agriculture means the use of the land for the primary purpose of making a profit from farming or ranching as it may include:

- The production, cultivation, growing, and harvesting of plant crops, but not including the harvesting of trees unless incidental to other agricultural operations or,
- The raising and/or the breeding of livestock including horses, dairy and beef cattle, sheep, goats, fur-bearing animals, poultry and swine, so long as they are not large confined animal feeding operations (CAFO) or,
- The production of nursery products and sod and,
- The harvesting, storage, grading, packaging, processing, distribution, and sale or trade of such commodities where such activities occur at the point of production.
- It specifically does not include the uses, structures and retail services normally associated with kennels, veterinary hospitals, the commercial slaughter of animals, and commercial riding stables. For purposes of this Standard, classification of the use of the property by a municipal planning department or the Gunnison County

Assessor's Office is not definitive or binding for purposes of this definition, nor shall the existence of a conservation easement on the property otherwise defined as agricultural affect that definition.

Approach Pad means that Portion of a road that is used by traffic approaching an intersection or turnaround.

Appliances means any flame or heat-producing device, which could potentially cause a fire or life safety hazard.

Average Daily Traffic means the average 24-hour volume, being the total number during a stated period, divided by the number of days in that period. Unless otherwise stated, the period is a year. In lieu of an approved, engineered study, a factor of 10 one-way trips per residence shall be used to determine the average daily traffic. The term is commonly abbreviated as **ADT**. See Gunnison County Standards And Specifications For Road And Bridge Construction, Section 4.2.2.

Board means the Crested Butte Fire Protection District Board of Directors.

Bridge means a structure including wall or abutments erected over a depression or an obstruction, as water, highway or railway and having a track or passageway for carrying traffic or other moving loads.

Buildable Parcel of land See also "Parcel", "Legal Lot" and "Lot".

Building Footprint means the outline of the total area that is covered by a building at ground level.

Central Water Supply means a water distribution system capable of delivering the required fire flow as determined by Appendix B of the 2003 International Fire Code.

Cul-de-sac Road means a road open at one end only that provides special provisions for turning around at its termination. See Appendix B.

Culvert means a closed conduit, other than a bridge, which conveys water carried by a natural channel or waterway transversely under the roadway.

Drainage means the water runoff that can be expected to occur during normal weather conditions.

Driving Surface means that part of a roadway having a constructed surface for the facilitation of vehicular movement.

Driveway means a private vehicular access, abutting a road or highway, for the exclusive use of the owners-occupants and their invitees, of no more than one lot and serving no more than 2 dwellings units; not considered to be a road or highway. See "Access".

Dwelling may contain one or two dwelling units or residences.

Dwelling Unit A single unit providing complete independent living facilities for one or more persons, including permanent provisions for living, sleeping, eating, cooking and sanitation.

Fire Chief Shall also mean the Fire Marshal or his designate.

Fire Protection Plan means the plans submitted for review of access and water supply to include but not limited to: site, access roads and driveways, utilities, fire hydrant locations, water supply and wildland fire mitigation.

Grade means the rate expressed in terms of percent, ascent or descent by length.

Guidelines and Standards means the ***Guidelines, Standards And Fees For The Review Of Fire Protection In Proposed Inclusions To The Crested Butte Fire Protection District, And New Subdivisions, P.U.D.s Or Any Other Buildable Parcel Of Land Within The Crested Butte Fire Protection District*** as it may be amended.

Inter-visible turnout means an approved increase in the width of a single lane road to allow the simultaneous passage of vehicles. Each turnout shall be located in plain view of the turnout ahead and behind subject to the constraints of terrain and topography. See Appendix C.

Legal Lot means a lot, parcel of tract of land that meets the definition of a "subdivision", or "subdivided land" as defined in C.R.S. 30-28-101 (10) (a) as it may be amended, of that is one of the exceptions to the definition of "subdivision" or "subdivided land" set out in the definition of "Subdivision of Subdivided Land" in C.R.S. 30-28-101 (10) (b), (c) or (d) as they may be amended, and that was created in compliance with all applicable laws, ordinances and regulations in effect at the time of its creation, and the legal description of which was recorded at the time of its creation in the records of the Clerk and Recorder of Gunnison County. A parcel as mapped for tax assessment records is not necessarily a legal lot.

Lot means a parcel or tract of land. See "Legal Lot".

Low Water Crossing means a structure used to cross a drainage course that provides only for limited conveyance of run-off under the traveled way with higher flows passing both under and over the traveled way.

May means a permissive condition.

Multi-Family Residence means a building that contains three or more residential units, but not including hotels, motels or lodges.

NFPA National Fire Protection Association

NST National Standard Thread

Parcel means a tract or lot of land. See "Legal Lot".

Private Road means any road that is not a public road.

Private Roads Under County Jurisdiction means roads that have been permitted through the Gunnison County Land Use Process.

Public Road means:

- All roads over private lands dedicated to the public use by deed to that effect, filed with the office of the Gunnison County Clerk and Recorder when such dedication has been accepted by the Board of County Commissioners and,
- All roads over private or other lands dedicated to public uses by due process of law, including a subdivision plat approved by Gunnison County and recorded in the office of the Gunnison County Clerk and Recorder, and not heretofore vacated by an order of the Board of County Commissioners duly entered of record in the proceedings of the Board of County Commissioners and
- All roads over private lands that have been used adversely without interruption or objection on the part of the owners of such lands for 20 consecutive years; as defined by Colorado law and,
- All roads over the public domain whether agricultural or mineral.

P.U.D. Planned Use Development.

Radii means:

- **Centerline Radius** The arc which corresponds to the given center of the roadway.
- **Inside Turning Radius** The arc or turn formed closet to the given radial point.
- **Minimum Turning Radius** The radius of a minimum turning path of the outside of the outer front tire.
- **Outside Turning Radius** The arc or turn formed furthest from the given radial point.

Residence means one dwelling unit.

Road Grade See "Grade".

Roadway Prism means the area of a road bounded by the traveled surface, the shoulders and lines projecting downward and away from the outside edge of the shoulder and intersecting the ground surface at an angle of 30 degrees to horizontal.

Shall means a mandatory condition.

Should means a recommended but not mandatory condition.

Shoulder mans the portion of the roadway contiguous with the driving surface for the accommodation of stopped vehicles, snow storage, emergency use, and for the lateral support of the roadway.

Structure means anything constructed or erected, that requires location on the ground, or is attached to something having location on the ground, including portable shelters for human habitation or use, recreational vehicles and tents, storage, transmission or distribution facilities or public utilities, but not including transmission lines of less than 45 kilovolt capacity, or fences. See "Agricultural".

Urban-Wildland Interface means that geographical area where structures and other human development meets or intermingles with wildland or vegetative fuels.

Waterway means a stream, river or creek, or any other natural channel or other topographic feature through which "live" water flows, but does not mean ditches used for agricultural purposes.

S Dominguez Gunnison County, CO 587610
11/12/2008 03:13 PM Pg: 27 of 43
447 R: $0.00 D: $

SUMMARY OF ACCESS ROAD AND DRIVEWAY ELEMENTS

FUNCTIONAL CLASSIFICATION	AVERAGE DAILY TRAFFIC	DRIVING SURFACE
Rural/Urban Road	200+	24'
Rural/Urban Lane	91-199	22'
Local Intermittent	21-90	16'
Driveway (2 dwelling units)	1-20	16'

Notes:

1. Assumes 10 trips per day per residential dwelling unit to calculate average daily traffic.
2. Minimum Right of Way Width, Right of Way Width for Snow Storage, and Shoulder Width shall comply with applicable municipal or county standards.
3. Driveways serving a single lot zoned for 10-19 residential units shall be 22' wide.
4. Driveways serving a single lot zoned for 20 or more residential units shall be 24' wide.

S Dominguez Gunnison County, CO 587610
11/12/2008 03:13 PM Pg: 28 of 43
447 R: $0.00 D: $

APPENDIX A

S Dominguez Gunnison County, CO 587610
11/12/2008 03:13 PM Pg: 29 of 43
447 R: $0.00 D: $

STANDARD TURNAROUND OPTIONS

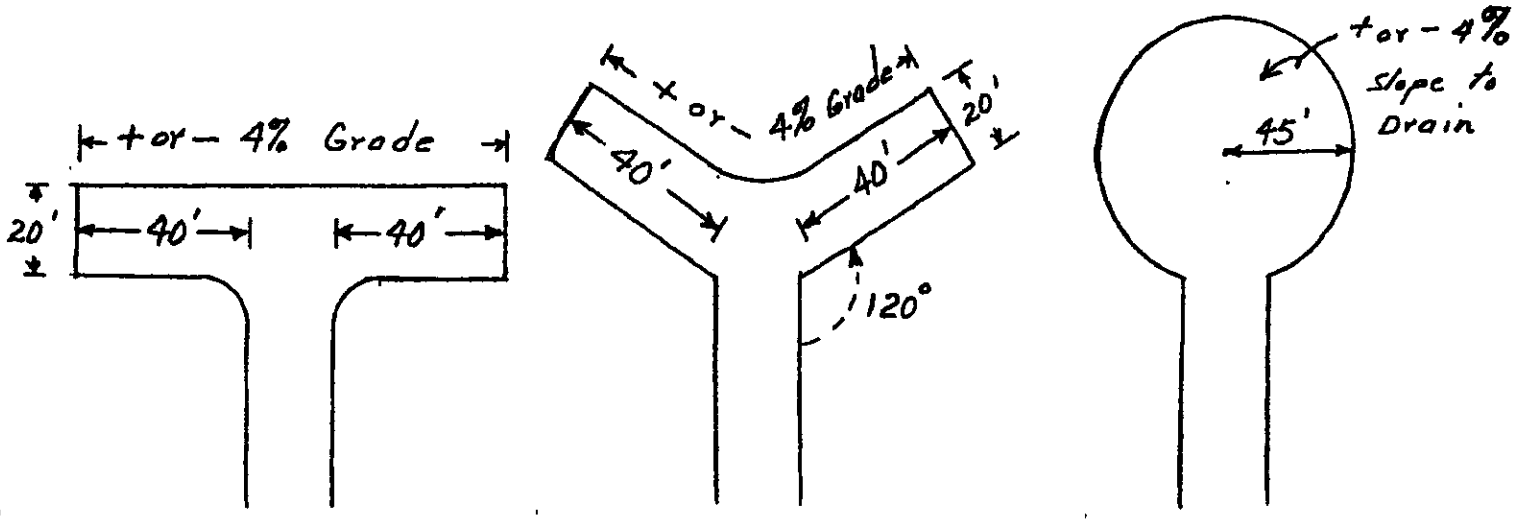

T – Turnaround

Y – Turnaround

Cul-de-sac

General Construction Notes:

1. Road width going into the Turnaround may vary from 16 feet to 24 feet.
2. Grade on the road approaching the Turnaround shall not exceed 4% for 50 feet.
3. Grades on 'T' or 'Y' Turnarounds shall not exceed + or – 4%.
4. A minimum of 4% crown, inslope or outslope, shall be constructed into the Turnaround to provide drainage.
5. 'T' Turnarounds shall be a minimum of 20 feet from any flammable structures.

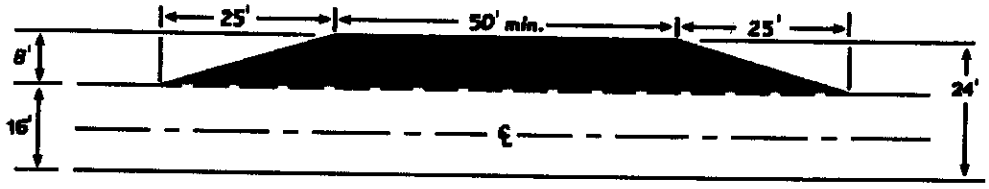

Typical Turnout

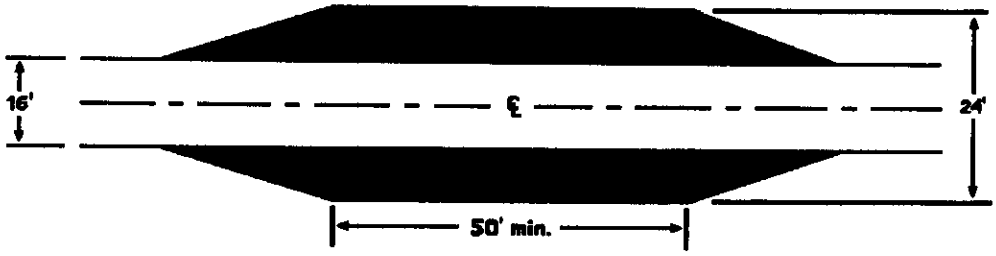

Typical Turnout

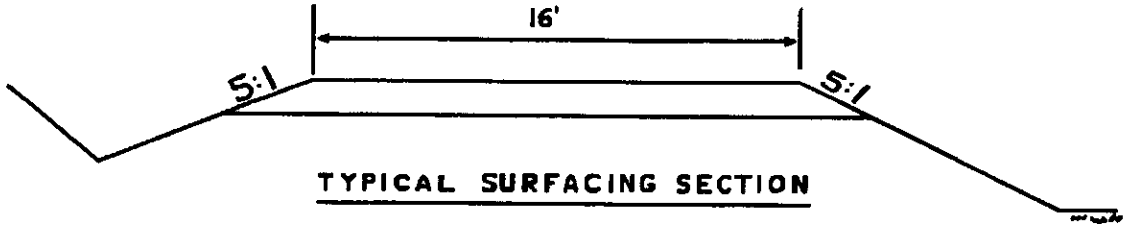

TYPICAL SURFACING SECTION

APPENDIX C

CRESTED BUTTE FIRE PROTECTION DISTRICT

FEES FOR THE REVIEW OF FIRE PROTECTION SYSTEMS, SPRINKLER SYSTEMS, AND THE SUBSEQUENT INSPECTIONS THEREOF FOR BUILDINGS WITHIN THE CRESTED BUTTE FIRE PROTECTION DISTRICT.

SECTION 1. COMMERCIAL BUILDING AND R-1 OCCUPANCY FEE.

101. Upon plan approval by the planning bodies of the municipalities or county, the Crested Butte Fire Protection District (District) shall perform a plan check of all commercial buildings and R-1 occupancies to be constructed within the District to ascertain compliance with the International Fire Code as adopted by the municipalities and county.

102. The District shall provide the building departments of the municipalities or county a written documentation of the findings of the review and the requirements to be incorporated into the building.

103. The District shall collect a fee from the building proponent based upon the amount of the building permit fee as calculated by the municipalities or county. District fees are:

- Sprinklered building: 50% of building permit fee.
- Non-sprinklered building: 25% of building permit fee.
- Non-sprinklered building with a fire suppression system or appliance requiring fire department inspection. (Kitchen hood, alarm system, etc.): 30% of building permit fee.

104. The fee shall cover all costs incurred in reviewing the building plans, sprinkler system plans when required, other fire suppression systems or appliances, the creation of pre-fire plans, and all subsequent inspections of the building.

105. The fee shall be due and payable upon issuance of the building permit. Inspections shall not be conducted until the fee is paid. In no event shall a certificate of occupancy be issued without full payment of the fee and the Fire Chief signing off on final inspection of the building.

106. In the event of a failed inspection requiring a re-inspection, a fee of $50 per hour ($50 minimum) shall be assessed.

SECTION 2. R-3 OCCUPANCY SPRINKLER SYSTEMS.

201. In the event that residential sprinkler systems are required in R-3 occupancies to mitigate inadequate access or water supply, a fee of 25% of the building permit fee shall apply to cover the costs of plan review and all subsequent inspections of the building.

202. In the event of a failed inspection requiring a re-inspection, a fee of $50 per hour ($50 minimum) shall be assessed.

APPENDIX D

S Dominguez Gunnison County, CO 587610
11/12/2008 03:13 PM Pg: 32 of 43
447 R: $0.00 D: $

APPROVED—3/21/08

AMENDMENT TO CBFPD GUIDELINES & STANDARDS

SECTION 5. WILDLAND FIRE MITIGATION

SECTION 501 compliance with Existing or other Standards

Section 501 A is amended as follows:

A. **All Occupancies.** Defensible Space mitigation shall be performed in compliance with Colorado State Forest Service requirements noted in pamphlet # 6.302 and other standards adopted by CBFPD:

1. For all new buildings regardless of floor area or occupancy type that are located in moderate, high or extreme wildland fire areas as determined by the Gunnison County Wildfire Hazard map. In occupancies of a hazardous nature or where special hazards exist, reference 2003 IFC § 901.4.3 and additional mitigation may be required on a case-by-case basis.

2. For all existing buildings and new sections of any existing building that are located in moderate, high or extreme wildland fire areas as determined by the Gunnison County Wildfire Hazard map and whenever total additions result in an increase of the original floor area by more than 50 percent, or whenever total additions result in an increase of more than 1,000 square feet in the total floor area, including mezzanines or additional stories, or whenever alterations to existing buildings exceed 50 percent of the replacement value, as determined by the building official. Alteration values and additional floor area shall be cumulative with each issuance of a building permit, regardless of any change in ownership.

3. For all existing and new sections of an existing building for which there is an occupancy classification change.

EXCEPTION:
When expenditures are strictly related to repair or maintenance of an existing building.

EXHIBIT D

APPROVED 8 1 08

Proposed language for

Automatic Fire Sprinkler System requirements

in CBFPD Guidelines & Standards

Section 402–Water Supply Deficiencies. Amended as follows.

[new section] Section 402 A **New subdivisions and PUD's.** An automatic fire suppression system shall be installed in all structures in all new subdivisions or PUD's where there is not installed a central water supply capable of providing the required fire flows per the IFC 2003 edition appendix B.

1. All structures shall have installed a fire suppression system in accordance with NFPA 13 *Standard for the Installation of Sprinkler Systems*, 13D *Standard for the Installation of Sprinklers Systems in One- and Two-Family Dwellings and Manufactured Homes* or 13R *Standard for the Installation of Sprinklers Systems in Residential Occupancies up to and Including Four Stories in Height,* current edition, by covenant and,
2. Installed fire protection systems shall be monitored and supervised by an approved central station fire alarm company and,
3. The size of the storage tank shall be double the required amount per the applicable NFPA standard or based on 30 gallons per minute response time, at posted speed limits, measured from the nearest fire station, whichever is greater.

EXCEPTIONS:

(a) Detached carports and greenhouses.

(b) Sheds and auxiliary structures not used for human habitation. See definition for **HABITABLE SPACE** in 2003 IRC § R202.

(c) When expenditures are strictly related to repair or maintenance of an existing system.

(d) Isolated rural buildings shall be exempt if any of the following conditions apply:

1. Emergency vehicle access to the property is seasonal.
2. The property is located beyond maintained roads.
3. The property is located beyond emergency vehicle access.
4. The property is not served with electricity by a public utility.

[new section] Section 402 B **New projects other than new subdivisions and PUD's.** In all occupancies an automatic fire suppression system installed in compliance with the National Fire Protection Association Standards and other standards adopted by CBFPD shall be installed:

1. In all new buildings regardless of floor area or occupancy type. For the purpose of this section, the floor area within the surrounding exterior walls shall be considered as one building. Area separation walls shall not be used in calculating allowable floor area for sprinkler requirements. In occupancies of a hazardous nature or where special hazards exist, reference 2003 IFC § 901.4.3.
EXCEPTIONS:
(a) Detached carports and greenhouses.
(b) Sheds and auxiliary structures not used for human habitation. See definition for **HABITABLE SPACE** in 2003 IRC § R202.
(c) When expenditures are strictly related to repair or maintenance of an existing system.

2. Throughout existing and new sections of any existing building whenever total additions result in an increase of the original floor area by more than 50 percent, or whenever total additions result in an increase of more than 1,000 square feet in the total floor area, including mezzanines or additional stories, or whenever alterations to existing buildings exceed 50 percent of the replacement value, as determined by the building official. Alteration values and additional floor area shall be cumulative with each issuance of a building permit, regardless of any change in ownership.
EXCEPTIONS:
(a) Detached carports and greenhouses.
(b) Sheds and auxiliary structures not used for human habitation. See definition for **HABITABLE SPACE** in 2003 IRC § R202.
(c) When expenditures are strictly related to repair or maintenance of an existing system.

3. Throughout existing and new sections of an existing building for which there is an occupancy classification change.

Reference:

2003 IFC § 901.4.3 **Additional fire protection systems.** In occupancies of a hazardous nature, where special hazards exist in addition to the normal hazards of the occupancy, or where the fire code official determines that access for fire apparatus is unduly difficult, the fire code official shall have the authority to require additional safeguards. Such safeguards include, but shall not be limited to, the following: automatic fire detection systems, fire alarm systems, automatic fire-extinguishing systems, standpipe systems, or portable or fixed extinguishers, Fire protection equipment required under this section shall be installed in accordance with this code and the applicable referenced standards.

Definition:

2003 IRC § R202
[B] HABITABLE SPACE. A space in a building for living, sleeping, eating or cooking. Bathrooms, toilet rooms, closets, halls, storage or utility spaces and similar areas are not considered habitable spaces.

SECTION 1. GENERAL REQUIREMENTS

101. Inclusion of Property

A. The owner or developer of proposed inclusion of property to the Crested Butte Fire Protection District shall conform to the requirements set forth in Section 32, part IV, INCLUSION OF TERRITORY, of the Colorado Revised Statutes.

102. Plans Submittal

A. The owner or developer of each inclusion, subdivision, P.U.D. or each buildable parcel of land, shall submit a fire protection plan to the Crested Butte Fire Protection District for review and approval. The Plan shall consist of plans, specifications, covenants, deed restrictions and contracts as deemed necessary by the Fire Chief to show compliance with Sections 2 through Section 8 of this resolution.

103. Conflicting Provisions

A. Where there is a conflict between a general requirement and a specific requirement, the specific requirement shall be applicable. Where there is a conflict between the Crested Butte Fire Protection District Guidelines and Standards, Colorado State or Federal EPA regulations, and any other applicable municipal or Gunnison County requirements, the more stringent requirement shall apply.

SECTION 2. ACCESS REQUIREMENTS

201. Access

A. All fire apparatus access roads shall comply with the Guidelines and Standards of the Crested Butte Fire Protection District and Appendix D of the 2003 International Fire Code, as amended. If the project is located in the unincorporated area of Gunnison County within the Crested Butte Fire Protection District, then they shall also comply with Gunnison County Standards and Specifications for Construction of New Roads and Bridges.
B. Roads, streets and ways, whether public or private, shall provide for safe simultaneous access for emergency vehicles and civilian evacuation. The Crested Butte Fire Protection District shall be permitted to allow modification of access requirements where the structures being protected are provided with centrally monitored fire protection systems.
C. All developments are encouraged to provide two or more points of dedicated access on primary roads that permit adequately separated ingress/egress. The design of access routes shall consider traffic circulation and employ looped road networks. See Gunnison County LUR Section 5-307 B 1 and Appendix D of the 2003 International Fire Code.
D. All habitable structures located within the boundaries of the Crested Butte Fire Protection District, shall have access roads with all weather driving surfaces capable of supporting the imposed loads of emergency apparatus. All access roads to non-habitable structures must have driving surfaces capable of supporting legal loads as specified by the Colorado Department of Transportation.
E. Streets and roads shall be identified with approved signs. All road identification signs and supports located within the Urban-Wildland interface shall be of non-combustible materials.

All road identification signs shall be visible from both directions of travel. Temporary signs shall be installed at each street intersection when construction of new roadways allows passage by vehicles. Temporary signs shall be of an approved size, weather resistant and be maintained until replaced by permanent signs. All required road signs and traffic control devices shall be installed in accordance with the Manual of Uniform Traffic Control Devices, current edition. No road names or numbers shall be used which will duplicate, or be confused with, the names of any existing street or road in the Crested Butte Fire Protection District. If the road name or number is for a road that has not been accepted by Gunnison County for maintenance, the applicant, homeowner's association, or the developer of the affected road is responsible for the road name or number sign(s).

F. New and existing buildings shall have approved address numbers, building numbers, or approved building identification placed in a position to be plainly legible and visible from the street or road fronting the property. If the identification on a building cannot be plainly seen from the street or road fronting the property, then redundant identification shall be provided at the entrance to the driveway or access road. Identification of buildings shall contrast with their background. Address identification shall be Arabic numerals or alphabet letters. Numbers and/or letters shall be a minimum of 4 inches high with a minimum stroke width of 0.5 inch.

G. Where multiple addresses are required at a single driveway, they shall be mounted on a single post, and additional signs shall be posted at locations where driveways divide.

202. Road Grades

A. Normal road grades shall not exceed 11 percent.
B. Sections not exceeding 300 feet may be allowed a maximum grade of 12 percent.
C. Sections exceeding 11 percent shall not be within 500 feet of each other.
D. Road grades on Curves with centerline radius of less than 250 feet shall be reviewed on a case-by-case basis.
E. In flat or rolling terrain, all grades shall flatten to 4 percent for at least 100 feet approaching intersections, and for at least 50 feet entering and leaving turn-arounds or cul-de-sacs. In mountainous terrain, all grades shall flatten to 6 percent or less for at least 50 feet approaching intersections and entering switchbacks or cul-de-sacs. Note: Flat or rolling terrain is defined as 15 percent average cross slope, mountainous terrain is defined as greater than 15 percent average cross slope.

203. Access Roads

A. Shall meet the requirements of Section 2.
B. All access roads shall receive a functional classification as determined by the appropriate municipal public works or planning department official or the Director of Gunnison County Public Works Department.
C. All access roads with an ADT of 200 or more shall have a driving surface of 24 feet. Access roads with an ADT of 91-199 shall have a driving surface of 22 feet. Access roads with an ADT of 1-90 shall have a driving surface of 16 feet. See Appendix A.
D. All access roads shall be constructed to meet all municipal guidelines and standards for road and bridge construction and/or Gunnison County Standards and Specifications for Construction of New Roads and Bridges.
E. All access roads shall have a minimum inside turning radius of 40 feet.

F. The required width of primary access roadways shall not be obstructed in any manner, including the parking of vehicles.

G. The access roadway shall be extended to within 150 feet of all portions of the exterior walls of the first story of any building.

Exception: Distance may be extended to 225 feet if the building has an approved fire suppression system.

H. All single lane access roads less than 22 feet wide and in excess of 600 feet in length shall be required to have standard inter-visible turnouts. The location and spacing of inter-visible turnouts shall be approved on a case-by-case basis by the Gunnison County Public Works Department or the appropriate municipality in conjunction with the Crested Butte Fire Protection District. See also "Inter-visible Turnout" and Appendix C.

I. All access roads in excess of 150 feet in length that do not connect or intersect with other roads shall have an approved turn-around at the end of the access road segment. Turn-arounds shall be approved on a case-by-case basis by the Gunnison County Public Works Department or the appropriate municipality in conjunction with the Crested Butte Fire Protection District. See Appendix B.

J. All access roads shall have a minimum vertical clearance of 13 feet-6 inches.

K. An access road approach that is gated shall be designed so that the longest vehicle using it can completely clear the traveled way when the gate is closed. In no event shall such distance be less than 35 feet. All gates shall open inward or upward. All elements of a gate assemble shall not encroach on the required width of the access road. The required width of the access road shall be maintained through the clear opening of the gate. A siren activated opening device shall be installed to enable responding emergency units immediate passage through the gate. The Crested Butte Fire Protection District may be provided with an approved key or access code in lieu of a siren activated gate with the approval of the Fire Chief. All gates shall be installed with a "breakaway" construction feature in a manner that allows emergency vehicle access.

204. <u>Cul-de-sacs and Turn-arounds</u>

A. All cul-de-sacs and turn-arounds shall be constructed to meet all municipal guidelines and standards for road and bridge construction and/or Gunnison County Standards and Specifications for Construction of New Roads and Bridges. See Appendix B.

B. A cul-de-sac or turn-around, which may be vacated in the future, shall be improved to the functional classification standard of the road for which it serves if access is provided to dwellings or other structures.

C. Cul-de-sacs, "T" and "Y" turn-arounds shall be a minimum of 20 feet from any flammable structure and shall be approved on a case-by-case basis at the plan review phase.

D. Shall provide shoulders for drainage and snow storage. See Gunnison County Standards and Specifications for Construction of New Roads and Bridges, Section 4.8 or the appropriate municipal guidelines.

205. <u>Driveways</u>

A. Access to all buildings must allow a fire apparatus to stage within 150 feet of all portions of the exterior walls of the first story of any building. This distance may be increased to 225 feet if the structure is protected by an approved fire suppression system. Access to any building must be obtained from within it's own building lot. In the event that a residential building lot

is of a size and configuration that the staging requirement can be met from the access roadway, section 205 Driveways, B-W, shall not apply.

B. All driveways shall serve no more than 1 lot. See also definitions for "Access", "Driveway" and reference Gunnison County LUR Section 2-102, definition of "driveway".

C. All residential access driveways shall serve no more than 2 dwelling units. See also definitions for "Access", "Driveway", "Dwelling" and "Dwelling Unit".

D. All residential access driveways serving multifamily residences shall be reviewed to determine if a higher functional classification is appropriate. See Appendix A.

E. All driveways serving occupancies other than residences shall be reviewed on a case-by-case basis at the plan review stage.

F. All driveways shall have a minimum driving surface width of 16 feet.

G. All driveways shall be constructed in accordance with both an approved driveway permit and all applicable sections of these Guidelines, Standards and Fees. Access to a Gunnison County road or right-of-way must be obtained as described in Section 7.4 of the Gunnison County Standards and Specifications for Construction of New Roads and Bridges. Access to a municipal road or right-of-way must be obtained from the appropriate municipal planning department.

H. All driveways shall be constructed to meet all municipal or Gunnison County Standards and Specifications for Construction of New Roads and Bridges from the edge of the municipal, Gunnison County, public or private road under municipal or Gunnison County jurisdiction, to the building footprint.

I. All driveways accessing habitable structures shall have an all weather-driving surface. Driveways accessing non-habitable structures must be capable of supporting the imposed loads of emergency apparatus. In the case of a native material road, the driveway shall match the existing surface.

J. All driveways shall have a maximum grade of 11 percent.

K. Driveways on steep uphill or downhill will require a safe, at grade approach, for a minimum of 30 feet before the intersection with the edge of the road. Any exception shall be approved on a case-by-case basis.

L. All residential access driveways that access a municipal or Gunnison County road or right-of-way, shall have a minimum surface width of 18 feet at the edge of the pavement or road surface, and taper to a minimum surface width of 16 feet at a distance of 6 feet from the edge of the road, and maintain this surface width to the edge of the building footprint.

M. All driveways shall be constructed with a minimum inside turning radius of 40 feet.

N. All driveways and approaches shall be constructed so that they shall not interfere with the drainage system of the roadway.

O. The horizontal axis of an approach to the roadway shall normally be at right angle to the centerline of the roadway and extend a minimum of 40 feet beyond the edge of the traveled way. An angle between 90 and 60 degrees shall be permitted if it can be shown that physical constraints exist that requires a new approach angle of less than 90 degrees. An angle of less than 60 degrees is not permitted.

P. All single lane driveways in excess of 600 feet in length shall be required to have standard inter-visible turnouts. The location and spacing of inter-visible turnouts shall be determined on a case-by-case basis. See also "Inter-visible Turnout" and Appendix C.

Q. All driveways in excess of 150 feet in length shall have a loop design or approved turn around adequate to accommodate emergency service vehicles. Cul-de-sacs, "T" and "Y" turn-arounds shall be a minimum of 20 feet from any flammable structure and shall be approved on a case-by-case basis at the plan check phase. See Appendix B.

R. All turn around areas shall be kept open and clear at all times and shall have sufficient area for snow storage outside of the road prism. It shall be the owner's responsibility to keep the area clear of snow in the winter. See Appendix B.
S. Any proposed driveway that is over 250 feet in length and has the potential to be used for a road for future development may be referred to the appropriate municipal or Gunnison County planning department for proper review.
T. Vertical clearance for any overhead entry structures shall be at least 13 feet-6 inches high, measured from the road surface, and shall be maintained to the edge of the building footprint.
U. Adequate vehicle parking must be provided on the private parcel. No parking along the road, in turnouts or turn-arounds will be permitted.
V. Driveways located near an intersection shall be constructed so that the side nearest the intersection is no less than 100 feet from the centerline of the intersecting road for commercial/industrial access and 50 feet for residential access.
W. A driveway that is gated shall be designed in accordance with section 203 K.

206. Bridges and Low Water Crossings

A. Where a bridge or a low water crossing is required to be used as access, it shall be constructed and maintained in accordance with nationally recognized standards, the standards of the appropriate municipality, or Gunnison County Standards and Specifications for Construction of New Roads and Bridges.
B. Bridges and low water crossings shall maintain a minimum clear roadway width equal to width of the approach road.
C. All bridges shall be designed to meet Colorado Department of Transportation legal load requirements.
D. Bridges requiring posting shall have their legal load limits plainly displayed at both entrances.

SUMMARY OF ACCESS ROAD AND DRIVEWAY ELEMENTS

FUNCTIONAL CLASSIFICATION	AVERAGE DAILY TRAFFIC	DRIVING SURFACE
Rural/Urban Road	200+	24'
Rural/Urban Lane	91-199	22'
Local Intermittent/Driveway (2 dwelling units)	1-90	16'

Notes:

1. Assumes 10 trips per day per residential dwelling unit to calculate average daily traffic.
2. Minimum Right of Way Width, Right of Way Width for Snow Storage, and Shoulder Width shall comply with applicable municipal or county standards.
3. Roads/Driveways serving a single lot zoned for 10-19 residential units shall be 22' wide.
4. Roads/Driveways serving a single lot zoned for 20 or more residential units shall be 24' wide.
5. Single lane driveways may require standard inter-visible turnouts. The location and spacing of inter-visible turnouts, shall be determined on a case-by-case basis.

S Dominguez Gunnison County, CO 587610
11/12/2008 03:13 PM Pg: 41 of 43
447 R: $0.00 D: $

STANDARD TURNAROUND OPTIONS

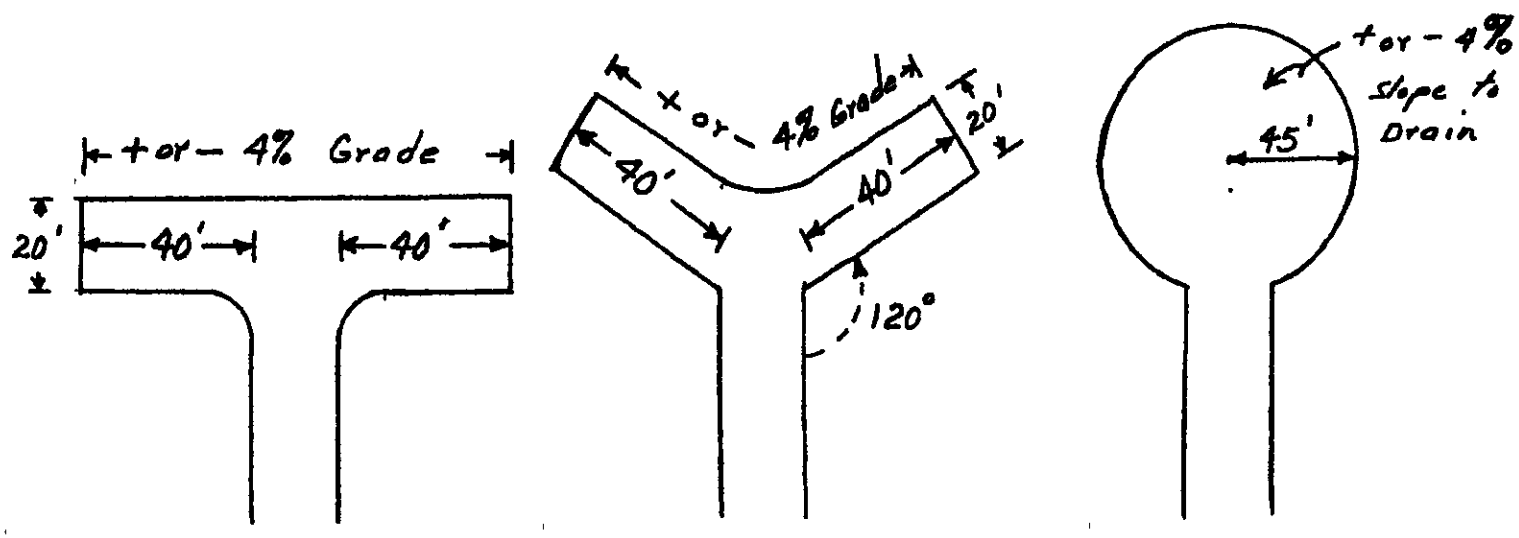

T – Turnaround

Y – Turnaround

Cul-de-sac

General Construction Notes:

1. Road width going into the Turnaround may vary from 16 feet to 24 feet.
2. Grade on the road approaching the Turnaround shall not exceed 4% for 50 feet.
3. Grades on 'T' or 'Y' Turnarounds shall not exceed + or – 4%.
4. A minimum of 4% crown, inslope or outslope, shall be constructed into the Turnaround to provide drainage.
5. 'T' Turnarounds shall be a minimum of 20 feet from any flammable structures.
6. Variation of a 'T' or 'Y' turnaround shall be reviewed on a case-by-case basis.

703. Waivers

A. No waiver of these Guidelines and Standards shall be valid unless approved by the Board in writing as set forth in this section.

B. Only the Board may approve a waiver of these Guidelines and Standards except that the Fire Chief has the limited authority to waive these Guidelines and Standards only for a driveway or for an insignificant extension of an existing road; the Fire Chief may refer such waivers to the Board. The Board, or if applicable, the Fire Chief, may place special conditions on the approval of a waiver. Such conditions may relate to the following:
   1. Access and,
   2. Water Supply and,
   3. Seasonal use and,
   4. Number of structures and,
   5. Size of structures and,
   6. Location of structures and,
   7. Defendable space and,
   8. Type of use and,
   9. Existence of public utilities and,
   10. No increased risk to emergency services personnel, without limitation.

C. A waiver shall be project specific and shall not establish a precedent for any other proposed waiver.

D. No waiver shall be granted unless and until all applicable review fees have been paid to the Crested Butte Fire Protection District.

E. A request for a waiver must be made in writing and identify the following:
   1. The name, address and telephone number of the applicant and,
   2. Identification of the subject property and road and,
   3. A specific description of the requested waiver (including relevant, proposed construction plans) and,
   4. A detailed explanation of why the proposed waiver is warranted by site specific conditions which create an unusual aspect or feature not shared by property in general and,
   5. A detailed explanation of why the proposed waiver:
      a. Would not adversely affect the safe, efficient and orderly movement of motorized and non-motorized traffic and,
      b. Would not adversely affect health or safety and,
      c. Would not cause substantial injury to the owner or occupant of adjacent land(s) and,
      d. The waiver will not cause an increased risk to emergency services personnel, without limitation and,
      e. Would not cause substantial injury to the environment and,
      f. Would provide the functional equivalent of these Guidelines and Standards and,
   6. Any other information required by the Board or Fire Chief (e.g. survey or technical opinion and report).

F. No public hearing is required for a determination of a waiver by the Fire Chief.

G. Within fourteen days of receipt by the Board of a complete petition for waiver, to be determined by the Board, the Board shall set a date, time and place for a public hearing on that petition. The Board shall publish, at a minimum, notice of such hearing once a week, for the

two consecutive weeks immediately before the hearing. The applicant for the waiver must notify all adjacent property owners, no later than fourteen days before the hearing, by mailing to each of them, by certified mail, return receipt requested, a complete copy of the request for a waiver and a copy of the notice of the public hearing; the applicant must provide proof of such notification to the Fire Chief at least seven days prior to the public hearing.

H. No waiver shall be granted unless the Board, or if applicable the Fire Chief, determines in writing the applicant has established by clear and convincing evidence that:
   1. The waiver is warranted by site specific conditions which create an unusual aspect or feature not shared by property in general and,
   2. The waiver will not adversely affect the safe, efficient and orderly movement of motorized and non-motorized traffic and,
   3. The waiver will not adversely affect health or safety and,
   4. The waiver will not cause substantial injury to the owner or occupant of adjacent land(s) and,
   5. The waiver will not cause an increased risk to emergency services personnel, without limitation and,
   6. The waiver will not cause substantial injury to the environment and,
   7. The proposal will provide the functional equivalent of these Guidelines and Standards.

No access waiver, within unincorporated Gunnison County, shall be valid unless approved by the Board of County Commissioners or the Public Works Director of Gunnison County pursuant to Section 1.9 of the Gunnison County Standards and Specifications for Construction of New Roads and Bridges. The Crested Butte Fire Protection District may provide comments pertaining to additional life safety requirements for the Board of County Commissioners or the Public Works Director of Gunnison County to take under consideration.

S Dominguez Gunnison County, CO 587610
11/12/2008 03:13 PM Pg: 43 of 43
447 R: $0.00 D: $

Revised 10/1/08