# AGENDA ITEM or FINAL CONTRACT REVIEW SUBMITTAL FORM

**AgendaTitle:**
Road Maintenance Agreement between the United States Department of the Interior, Bureau of Land Management, Gunnison Field Office and Gunnison County, Colorado by and through its Board of CountyCommissioners; 20 Years

**Action Requested:** Board of County Commissioners' Signature

**Parties to the Agreement:** Gunnison County & BLM

**Term Begins:** 5/7/2013 **Term Ends:** 5/7/2033 **Grant Contract #:**

**Summary:**
Road Maintenance Agreement with BLM; Purpose is how to address various public roads on public land in Gunnison County.

**Fiscal Impact:** 0

**Submitted by:** M. Crosby **Submitter's Email Address:** mcrosby@gunnisoncounty.org

**Finance Review:** ○ Required ● Not Required

Comments:

Reviewed by: Discharge Date:

**County Attorney Review:** ● Required ○ Not Required

Comments:

Reviewed by: Bwiseman Discharge Date: 5/2/2013 Certificate of Insurance Required Yes ○ No ●

**County Manager Review:**

Comments:

Reviewed by: MBirnie Discharge Date: 5/3/2013

○ Consent Agenda ● Regular Agenda ○ Worksession Time Allotted: 5 minutes

Agenda Date: 5/7/2013 Follow Up Agenda Date: N/A

*Revised April 2013*

## AGENDA ITEM or FINAL CONTRACT REVIEW SUBMITTAL FORM

**Gunnison County Legal Instrument #** _____

**Date of Request:** 5/2/2013 **Contractual Deadline:** **Received in Administration:**

**Desired Agenda Date:** 5/7/2013 **Amount of Discussion Time Desired:** Asst County Manager Reports

**Action Requested:** Approve the Road Maintenance Agreement between Gunnison County/BLM

**Parties to the Agreement:** Gunnison County and US Dept of the Interior, Bureau of Land Management

**Term Begins:** 05/07013 **Term Ends:** 5/7/1933 **Grant Contract #:**

**Summary:** Please refer to letter from Stuart Schneider, Associate Field Manager, BLM for a summary that is clear and concise. As with the Forest Service, separate agreements can be negotiated as needed for specific roads.

**Recommendation:** Approve Road Maintenance Agreement with Exhibit A and Exhibit B and authorize Chair to sign.

**Fiscal Impact:** We collect HUTF for all of these road miles so it would be a negative impact to our budget.

**Submitted by:** Marlene D. Crosby **Return To:** Marlene Crosby

**Finance Department Review:** (X) Required ( ) Not Required

Comments:

Signature Discharge Date

**County Attorney Review:** (X) Required ( ) Not Required

Comments:

GK DB 5/2/13

Certificate of Insurance Required

Yes ____ No X Initials DB

Signature Discharge Date

**Returned to Administration:** **Original Returned:**

**County Manager Approval:**

Signature Date

( ) Consent Agenda ( ) Regular Agenda Time Allotted: _____

*Revised July 2010*

## AGENDA ITEM or FINAL CONTRACT REVIEW SUBMITTAL FORM

**Gunnison County Legal Instrument #** _____

**Date of Request:** 5/2/2013 **Contractual Deadline:** **Received in Administration:**

**Desired Agenda Date:** 5/7/2013 **Amount of Discussion Time Desired:** Asst County Manager Reports

**Action Requested:** Approve the Road Maintenance Agreement between Gunnison County/BLM

**Parties to the Agreement:** Gunnison County and US Dept of the Interior, Bureau of Land Management

**Term Begins:** 05/07013 **Term Ends:** 5/7/1933 **Grant Contract #:**

**Summary:** Please refer to letter from Stuart Schneider, Associate Field Manager, BLM for a summary that is clear and concise. As with the Forest Service, separate agreements can be negotiated as needed for specific roads.

**Recommendation:** Approve Road Maintenance Agreement with Exhibit A and Exhibit B and authorize Chair to sign.

**Fiscal Impact:** We collect HUTF for all of these road miles so it would be a negative impact to our budget.

**Submitted by:** Marlene D. Crosby **Return To:** Marlene Crosby

**Finance Department Review:** (X) Required ( ) Not Required

Comments: _____

Signature Discharge Date

**County Attorney Review:** (X) Required ( ) Not Required

Comments: _____

Certificate of Insurance Required

Yes ____ No ____ Initials ____

Signature Discharge Date

**Returned to Administration:** **Original Returned:**

**County Manager Approval:**

Signature Date

( ) Consent Agenda ( ) Regular Agenda Time Allotted: _____

*Revised July 2010*

# United States Department of the Interior

BUREAU OF LAND MANAGEMENT
GUNNISON FIELD OFFICE
650 South 11th Street
Gunnison, CO 81230
www.blm.gov/co/st/en/fo/gfo.htm
(970) 642-4940

May 2, 2013

In Reply Refer To:
2800 (COS060)

Gunnison County Public Works Department
Attn: Marlene Crosby, Director
195 Basin Park Drive
Gunnison, CO 81230

Dear Marlene:

This letter is to follow up on our conversations over the past several months regarding how to address various roads on public land in Gunnison County. The roads that we discussed are those 1) that the County considers to be County roads, 2) that the County proposes to manage as County roads, and 3) those the County maintains for the BLM under the "Road Maintenance Agreement Between Board of County Commissioners, Gunnison County, Colorado and Montrose District Manager, Bureau of Land Management, USDI" dated March 14, 1982.

BLM worked with Hinsdale and Saguache Counties in the mid-1980s to recognize R.S. 2477 public roads in those counties. For unknown reasons, it appears that Gunnison County did not submit any R.S. 2477 claims at that time. On February 1, 2013, we conducted a joint review of a map prepared in the early 1990's by Tom Hurshman, a former BLM Realty Specialist, that identified roads the BLM considered eligible as R.S. 2477 roads. We were generally in agreement as to which roads are County roads and which roads are BLM roads.

However, since 1997, BLM has been prohibited by Congressional direction to adjudicate any R.S. 2477 claims. A 2005 Tenth Circuit court ruling clarified that the BLM lacks the authority to make binding determinations on the validity of R.S. 2477 rights-of-way. Since February 20, 2009, the BLM has been further directed to not process or review any claims under R.S. 2477, including administrative non-binding determinations. In the absence of Federal Court adjudication or a previous BLM determination of R.S. 2477 rights-of-way, BLM may only grant FLPMA (the Federal Land Policy and Management Act of 1976) right-of-ways.

Alternatively, BLM may enter into Road Maintenance Agreements (RMAs) that allocate responsibility between the County and BLM for the routine maintenance of roads on BLM-administered public lands. Routine maintenance includes work that is reasonably necessary to preserve the existing road in its present condition, including the physical upkeep or repair of wear or damage whether from natural or other causes, maintaining the shape of the road, grading it, making sure that the shape of the road permits drainage, and keeping drainage features open and operable – essentially preserving the status quo. RMAs do not make any determination regarding the legal status under R.S. 2477 of the roads to which they apply.

Given the current authorities that BLM has to address roads and road maintenance, I propose that Gunnison County and the BLM Gunnison Field Office proceed as follows to document road status and/or to authorize road maintenance on the subject roads.

For the roads that the County wishes to manage as County roads and for which there is no assertion of a R.S. 2477 ROW, the County could apply for a FLPMA ROW. This ROW application could be processed to include all such roads, including the Lost Canyon, Slate River, and Landfill Roads, which already have FLPMA ROWs. The ROW application should include a management plan for each road segment, similar to that attached to the Lost Canyon Road ROW. The roads shown on Attachment A would be part of this ROW application:

For the roads considered to be County roads and for the BLM roads that the County maintains, I propose that the County and the Gunnison Field Office enter into a new Road Maintenance Agreement. The existing Road Maintenance Agreement was approved in 1982, and I think we all agree that it needs to be updated. For the purposes of documenting our common understanding of which roads are County roads and which roads are BLM roads, until such time as R.S. 2477 claims can be adjudicated, I propose that we note that in some way in the RMA (perhaps simply by labeling roads as County or BLM). The roads shown on Attachment B would be part of the proposed RMA.

Please contact Marnie Medina of my staff (at 642-4954 or mmedina@blm.gov) for any questions or further discussions on a FLPMA ROW application and/or an updated RMA.

Sincerely,

Stuart Schneider

Stuart Schneider
Associate Field Manager

Enclosures (3)
Attachment A: FLPMA ROW Roads
Attachment B: Road Maintenance Agreement Roads
Draft Road Maintenance Agreement

Attachment A

Roads on BLM Lands in Gunnison County
that could be part of a
FLPMA Right-of-Way

| **Road Name** | **BLM Rd No.** | **Gunnison County Rd No.** |
|---|---|---|
| Wylie Lane – 2 segments:<br>1) from the west end of CR 818 at the private/ BLM boundary in sec. 3, west and north roughly to Kenny Moore Reservoir;<br>2) from the Mill Creek Road, CR 727, south and east to the private/BLM boundary on the south side of sec. 13. | 3115 | CR 818 |
| Slate River:<br>already covered by COC-65041 | N/A | 734 |
| Lost Canyon:<br>already covered by COC-65041 | 3110 | 743 |
| Landfill:<br>already covered by COC-35422 | 3195 | 42C |
| Quartz Creek Cutoff:<br>already covered by COC-53317 which applies *only* to the rerouted segment | | 44 |

Attachment B

Roads on BLM Lands in Gunnison County
that could be part of a new
Road Maintenance Agreement

| BLM Roads | | | |
|---|---|---|---|
| **Road Name** | **BLM Road No.** | **Gunnison County Road No.** | **1982 RMA Sheet #** |
| McCabe Lane to Cottonwood [1] | 3500 | N/A | N/A |
| Kill Hill [1] (from base area to BLM Rd 3500) | 3505 | N/A | N/A |
| South Parlin Flats Cutoff (from end of CR at private/BLM boundary to Hwy 114) | 3076 | 43 | 4 |
| Indian Creek (from Hwy 149 to end of road) | 3033 | 58 | 5 |
| Ten Mile Springs (from private/BLM boundary to junction with BLM Roads 3034d and 3034e) | 3034 | 59 | 6 |
| North Parlin Flats (from CR76 to FS/BLM boundary) | 3103 | 60 | 7 |
| North Pole Creek (from CR 31 to County line) | 3054 | 61 | 8 |
| Houston Gulch (from CR 62 to BLM Road 3076, South Parlin Flats) | 3077 | 62 | 9 |
| Gateview (Lake Fork Canyon, from CR 25 to BLM/NPS boundary) | 3012 | 64 | 10 |
| Big Blue Ridge (from BLM/FS boundary to end of road) | 3006 | 65 | 11 |
| High Mesa (from CR 864 to end of road at BLM/FS boundary) | 3001 | 864A | 16 |
| [1] *Roads not in 1982 Road Maintenance Agreement* | | | |
| **BLM Roads on 1982 RMA that will not be included on updated RMA** | | | |
| Cox's Park (Big Blue Segment A, from Alpine Plateau Road to private/BLM boundary) | 3005 | 66 | 12 |
| Baldy (Big Blue Segment B, from Alpine Plateau Road to end of road) | 3007 | 67 | 13 |
| Big Blue Segment C (from Alpine Plateau Road to private/BLM boundary at the south line of sec. 36) | 3008 | 68 | 14 |

| County Roads | | | |
|---|---|---|---|
| **Road Name** | **BLM Road No.** | **Gunnison County Road No.** | **1982 RMA Sheet #** |
| Miller Lane | N/A | 7 | |
| Walker Lane (Cranor Hill) | 3109 | 10 | |
| Blue Mesa Cutoff | 3009 | 25 | |
| Cebolla Creek/Powderhorn | 3036 | 27 | |
| Vulcan | 3043 | 31 | 2 |
| McCabe Lane (from Hwy 50 to private/ BLM boundary) | 3054 | 32 | 3 |
| Gold Basin | 3065 | 38 | |
| Steuben Creek (to current gate at Robbins') | 3041 | 20 | |
| Beaver Creek (to SWA boundary) | 3089 | 726 | |
| Antelope (into subdivision, not through Mapes' up Antelope Creek) | N/A | 17 | |
| Quartz Creek | 3101 | 76 | |
| Quartz Creek Cutoff (there is a FLPMA ROW for the reroute section, COC-53317) | 3100 | 44 | |
| Hot Springs Creek (to FS boundary past Waunita Hot Springs) | 3095 | 887 | |
| Razor Creek (from Doyleville Cutoff, CR 45, to private/BLM boundary on Houston Gulch) | 3077 | 62 | |
| Doyleville Cutoff | 3090 | 45 | |
| Irby Lane (from CR 45 to Irby's) | 3091 | 46 | |
| Needle Creek Reservoir (from CR 46 to County line) | 3092 | 47 | |
| Sixmile Lane (from the private/BLM boundary at the south end of Hollenbeck's property to the County line) | 3072 (Long Gulch) | 42 | |
| South Parlin Cutoff (from Hwy 50 to private /BLM boundary) | N/A | 43 | 4 |
| Blue Mesa (from CR 25 to Alpine Plateau Road) **NOTE**: The County would not be committed to any maintenance of this road; it would only be noted as a public road. | 3011 | 68 | |

# ROAD MAINTENANCE AGREEMENT

Between

The United States Department of the Interior,
Bureau of Land Management,
Gunnison Field Office

And

Gunnison County, Colorado
by and through its
Board of County Commissioners

THIS ROAD MAINTENANCE AGREEMENT (Agreement) is entered into this ___ day of _____, 2013 by and between the United States Department of the Interior, Bureau of Land Management, Gunnison Field Office, hereinafter referred to as the "BLM," and the Board of County Commissioners, Gunnison County, Colorado, hereinafter referred to as the "County."

WHEREAS, pursuant to the Federal Land Policy and Management Act, 43 U.S.C. § 1701 et seq. (FLPMA), the BLM is responsible for the orderly administration, management, and protection of certain federal public lands and natural resources, including federal public lands and natural resources within the County; and

WHEREAS, pursuant to state law, the County is responsible for, among other things, promoting the health, safety, and welfare of its inhabitants, providing for economic development, and sustaining the state's agricultural and other industries; and

WHEREAS, pursuant to Section 307 of FLPMA, 43 U.S.C. §1737, the BLM may enter into cooperative agreements involving the management and protection of the public lands, and pursuant to C.R.S. 29-20-105 and C.R.S. 29-1-203, the County may enter into cooperative agreements with other governmental entities; and

WHEREAS, in April 1997, the County developed its map titled "Roads Maintained Summer/Winter by Gunnison County Public Works Department" (which was then updated in January 2001) identifying those roads in the County, including certain roads crossing public land administered by the BLM, that constitute the County's transportation system, and which the County believes it is primarily responsible for maintaining or improving as appropriate in discharging its above-referenced responsibilities; and

WHEREAS, it is in the best interests of each of the parties to reach agreement governing the routine maintenance of the roads addressed herein without affecting any determination that may have been previously made regarding the existence of any R.S. 2477 rights-of-way, and without prejudicing the right of the County to subsequently assert R.S. 2477 rights-of-way and all rights attendant to such right-of-way ownership or the right of the BLM to assess or defend against any such assertions;

NOW, THEREFORE, for the mutual promises set forth herein, the BLM and the County hereby agree as follows:

1. Roads Covered by this Agreement.

   (a) Attached to this Agreement is Exhibit "A" and Map 1 which list and show those roads in the County's map titled "Roads Maintained Summer/Winter by Gunnison County Public Works Department" that the BLM and the County have agreed shall be covered by this Agreement. Exhibit "A" provides the following information about each road: (i) a BLM and County road number; (ii) length; (iii) width (if variable, list the range of widths); and (iv) any other relevant information about the physical characteristics of the road or the terrain it crosses.

   (b) In the event either party believes that any road listed on Exhibit "A" should no longer be covered by this Agreement, the party (first party) shall provide written notice to the other party (second party) indicating why it believes the road should be excluded from coverage, and requesting that the parties meet to discuss the matter. The parties shall then meet within 20 days (or within any agreed-upon reasonable timeframe if it is not possible to meet within 20 days) to discuss the matter. In the event the second party refuses to meet or, following the requested meeting, the first party continues to believe that the road should no longer be covered by this Agreement, the first party shall provide written notice to the second party of its decision and an amended Exhibit "A." Such amended Exhibit "A" shall be effective 48 hours after its receipt by the second party. In the event that the BLM discovers sensitive resources (i.e., listed species, cultural resources, etc.) that may be subject to unnecessary or undue degradation by reason of the routine maintenance provided for in Section 2 herein, the BLM shall promptly notify the County of such discovery, and the County will suspend any routine maintenance on the relevant portion of the road for the period of time necessary for the BLM and the County to meet and determine how best to protect the resource while allowing routine maintenance of the road. Section 10 herein shall not apply to such amendments to Exhibit "A".

   (c) The parties agree that the County may perform routine maintenance, as discussed in Section 2 herein and summarized in Exhibit "B," on each road covered by this

Agreement to preserve the existing road. The BLM also may perform such routine maintenance subject to the requirements of Paragraphs 2(a)-(c).

(d) Neither the inclusion in nor the omission from Exhibit "A" of a road shall create any presumption with respect to or affect in any manner the legal status of the road or the right of any person to assert or contest rights under R.S. 2477 in connection with the road.

2. Routine Maintenance under the Agreement.

(a) The routine maintenance that either the County or the BLM may perform on each road covered by this Agreement includes work reasonably necessary to preserve the existing road, including the physical upkeep or repair of wear or damage whether from natural or other causes, replacement of unsafe structures, including those damaged by natural and other events, maintaining the shape of the road, grading it, making sure that the shape of the road permits drainage, and keeping drainage features open and operable-essentially preserving the status quo.

(b) Each party shall maintain records of the routine maintenance it undertakes pursuant to this Agreement and provide the other party with copies of such records upon request or at the annual meeting provided for in Section 4 herein.

(c) Where practicable, the County shall provide the BLM with forty-eight (48) hours advance notice of the County's intent to undertake routine maintenance on a road covered by this Agreement. The purpose of the notice is not to make the routine maintenance subject to approval or disapproval by the BLM, as that would undermine a basic purpose of this Agreement. Rather, the purpose of the notice is to maintain open communication and cooperation between the parties and to allow the BLM to apprise the County of any circumstances or conditions that the County should be aware of in scheduling and undertaking such maintenance, as well as allowing the BLM to respond to inquiries from the public about such road work. In the event it is not practicable for the County to provide 48 hours advance notice to the BLM, the County shall provide notice to the BLM in as timely a fashion as is appropriate under the circumstances. The provisions of this section 2(c) also shall apply to any routine maintenance the BLM intends to undertake on the covered roads.

(d) The County shall not undertake any road work beyond routine maintenance without completing the consultation process with the BLM, as briefly discussed in Section 3 herein or, in the absence of completing such process, an order from a court of competent jurisdiction or a FLPMA Title V right-of-way grant authorizing such road work.

3. Consultation.

   (a) In the event the County wishes to perform road work beyond routine maintenance on one or more of the roads covered by this Agreement that the County asserts it holds as an R.S. 2477 right-of-way, the County and the BLM shall complete the consultation process provided for in Southern Utah Wilderness Alliance v. Norton, 425 F.3d 735 (10th Cir. 2005), and set forth in BLM Instruction Memoranda WO-IM-2008-175 ("Consultation on Proposed Improvements to R.S. 2477 Rights-of-Way") and WO-2010-016 ("Clarification of the Acting Director's February 20, 2009 Memorandum on R.S. 2477 Claims") with respect to the relevant road(s) before the County may undertake such improvements.

   (b) In the event the parties are unable to resolve any disagreements arising during the consultation process, the proposed improvement(s) shall not be undertaken in the absence of an order from a court of competent jurisdiction or a FLPMA Title V right-of-way grant authorizing such road work.

4. Annual Meeting. The BLM and the County shall meet at least annually to:

   (a) Discuss and provide records of the routine maintenance undertaken on the roads covered by this Agreement during the previous year or since the last meeting;

   (b) Discuss the possible addition to or deletion of roads from this Agreement;

   (c) Discuss how this Agreement is or is not working for the parties and any ways to improve the Agreement and the processes it sets forth for undertaking routine maintenance; and

   (d) Discuss road improvement projects that the County proposes or may wish to propose undertaking.

5. Responding to Emergencies. Should an emergency situation arise where public health and safety is at risk and road work is immediately required, if at all practicable the County shall notify BLM of the situation and the County and BLM shall coordinate concerning the necessary road work; following which the County may immediately undertake the appropriate road work necessary to respond to the emergency. If it is not practicable for the County to provide such prior notice to the BLM, the County shall notify the BLM of the emergency situation and the County response as soon as possible afterward.

6. Effective Date of Agreement. This Agreement shall be effective as of the date shown in the first paragraph of this document.

7. Term. This Agreement shall be in effect for a period of twenty (20) years and may be renewed for an additional twenty (20) years with the mutual consent of the parties.

8. Termination. In the event of a material breach, this Agreement may be immediately terminated by the non-breaching party. Otherwise, either party may terminate this Agreement following one year's written notice to the other party.

9. Entire Agreement. This Agreement constitutes the entire agreement between the parties and supersedes any prior road maintenance agreement, understanding, or representation of the parties regarding the subject matter hereof.

10. Amendment. This Agreement may be amended by mutual agreement. Such amendment shall be in writing and shall be effective when signed by both parties.

11. Remedies. The parties shall have all rights and remedies provided under law for a breach or threatened breach of this Agreement.

12. Notice. Any notice or request authorized or required by this Agreement shall be made in writing and made first class, postage prepaid, to the following:

| | |
|---|---|
| Field Manager | Chairperson |
| Gunnison Field Office | Gunnison County Board of County Commissioners |
| 650 South 11th Street | 200 E Virginia Avenue |
| Gunnison, CO 81230 | Gunnison, CO 81230 |
| Telephone: (970) 642-4940 | Telephone: (970) 641-0248 |
| Facsimile: (970) 642-4990 | Facsimile: (970) 641-3061 |

The designation of the respective addressee, address, telephone and/or facsimile number may be changed by written notice given in the same manner as provided herein.

13. No Precedent. Nothing in this Agreement establishes precedent regarding the BLM's future management or administration of the public lands under its jurisdiction or the County's or State of Colorado's management or administration of transportation systems under their jurisdictions, and nothing herein shall preclude or be construed as waiving or limiting any authority, rights, or obligations of the BLM, the County, or the State of Colorado under applicable law.

14. No Waiver. This Agreement does not constitute abandonment, waiver, or other termination or modification of any rights under R.S. 2477 with respect to the roads covered by this

Agreement, nor does the Agreement constitute acceptance or recognition of any rights under R.S. 2477, or a waiver by the BLM of any defenses to an assertion of such rights or prejudice in any way the BLM's right to contest any assertion of such rights. The parties also recognize that the BLM retains its duty and authority to prevent unnecessary or undue degradation of the surrounding and underlying Federal public lands through reasonable regulation of the use of the covered roads.

15. Interpretation. This Agreement was produced as a result of negotiations between the parties and shall not be construed against either party as the drafter of this Agreement.

IN WITNESS WHEREOF, the parties have executed this Road Maintenance Agreement in duplicate originals as of the day and year above written.

| GUNNISON COUNTY COMMISSION | BUREAU OF LAND MANAGEMENT<br>Gunnison Field Office |
|---|---|
| By_____<br>Paula Swenson, Chairperson | By_____<br>Brian St. George, Field Manager |

Attachments: (3)
Exhibit A: Listing of Roads
Exhibit B: Scope of Routine Road Maintenance
Map 1

**Exhibit A**
**Road Maintenance Agreement**
**List of Roads**

| BLM Roads | | | | |
|---|---|---|---|---|
| **BLM Road No.** | **Gunnison County Road No.** | **Road Name** (with description of segment subject to the agreement) | **Average Traveled Width (ft)** | **Road Length (miles)** [1] |
| 3500 | N/A | McCabe Lane to Cottonwood | TBD | 2.06 |
| 3505 | N/A | Kill Hill (from base area to BLM Rd 3500) | TBD | 1.53 |
| 3076 | 43 | South Parlin Flats Cutoff (from end of CR at private/BLM boundary to Hwy 114) | 16 | 4.87 |
| 3033 | 58 | Indian Creek (from Hwy 149 to end of road) | 12 | 10.35 |
| 3034 | 59 | Ten Mile Springs (from private/BLM boundary to junction with BLM Roads 3034d and 3034e) | 12 | 1.97 |
| 3103 | 60 | North Parlin Flats (from CR76 to FS/BLM boundary) | 16 | 5.44 |
| 3054 | 61 | North Pole Creek (from CR 31 to County line) | 14 | 4.11 |
| 3077 | 62 | Houston Gulch (from CR 62 to BLM Road 3076, South Parlin Flats) | 12 | 4.50 |
| 3012 | 64 | Gateview (Lake Fork Canyon, from CR 25 to BLM/NPS boundary) | 12 | 4.71 |
| 3006 | 65 | Big Blue Ridge (from BLM/FS boundary to turnaround at end of road) | 16 | 2.92 |
| 3001 | 864A | High Mesa (from CR 864 to end of road at BLM/FS boundary) | TBD | 12.11 |

[1] Road lengths determined from BLM GIS data

| County Roads | | | | |
|---|---|---|---|---|
| **BLM Road No.** | **Gunnison County Road No.** | **Road Name** (with description of segment subject to the agreement) | **Average Traveled Width (ft)** | **Road Length (miles)** [1] |
| N/A | 7 | Miller Lane | TBD | 2.24 |
| 3009 | 25 | Blue Mesa Cutoff | TBD | 16.79 |
| 3036 | 27 | Cebolla Creek/Powderhorn | TBD | 11.75 |
| 3043 | 31 | Vulcan | TBD | 11.15 |
| 3054 | 32 | McCabe Lane (from Hwy 50 to private/ BLM boundary) | TBD | 3.49 |
| 3065 | 38 | Gold Basin (from private/BLM boundary south of powerline to County | TBD | 4.49 |

| | | | | |
|---|---|---|---|---|
| | | line) | | |
| 3041 | 20 | Steuben Creek (to current gate at Robbins') | TBD | 2.65 |
| 3089 | 726 | Beaver Creek (to SWA boundary) | TBD | 0.47 |
| 3100 | 44 | Quartz Creek/Woods Gulch Cutoff (there is a FLPMA ROW for the rerouted segment, COC-53317) | TBD | 4.12 |
| 3077 | 62 | Razor Creek (from Doyleville Cutoff, CR 45, to private/BLM boundary on Houston Gulch) | TBD | 4.20 |
| 3090 | 45 | Doyleville Cutoff (to County line) | TBD | 2.11 |
| 3091 | 46 | Irby Lane (from CR 45 to Irby's) | TBD | 3.54 |
| 3092 | 47 | Needle Creek Reservoir (from CR 46 to County line) | TBD | 0.41 |
| 3072 | 42 | Sixmile Lane (from the private/BLM boundary at the south end of Hollenbeck's property to County line | TBD | 5.79 |
| N/A | 43 | South Parlin Cutoff (from Hwy 50 to private /BLM boundary) *NOTE: This road does not cross any BLM.* | TBD | 0.70 |
| 3011 | 68 | Blue Mesa/Little Willow Cutoff (from CR 25 to private/FS boundary) ***NOTE**: The County would not be committed to any maintenance of this road; it would only be noted as a public road.* | TBD | 7.96 |
| **Major County Paved or Gravel Roads** | | | | |
| 3109 | 10 | Walker Lane (Cranor Hill) | TBD | 4.63 |
| N/A | 17 | Antelope (into subdivision, not through Mapes' up Antelope Creek) | TBD | 3.98 |
| 3101 | 76 | Quartz Creek | TBD | |
| 3095 | 887 | Hot Springs Creek (to FS boundary past Waunita Hot Springs) | TBD | 10.30 |

[1] Road lengths determined from BLM GIS data

**Exhibit B**
**Road Maintenance Agreement**
**Scope of Routine Maintenance and Maintenance Guidelines**

1. Scope of Routine Maintenance

The term "routine maintenance" used in this Agreement, is governed by the decision in Southern Utah Wilderness Alliance v. Bureau of Land Management, 425 F.3d 735 (10th Cir. 2005). Under the decision, "routine maintenance" preserves the existing road, including the physical upkeep or repair of wear or damage whether from natural or other causes, maintaining the shape of the road, grading it, making sure that the shape of the road permits drainage, and keeping drainage features open and operable—essentially preserving the status quo. "Construction or improvement" requires advance consultation with the Bureau, and includes the widening of the road, the horizontal or vertical realignment of the road, the installation (as distinguished from cleaning, repair, or replacement in kind) of bridges, culverts, and other drainage structures, as well as any significant change in the surface composition of the road (e.g., going from dirt to gravel, from gravel to chipseal, roto-mill or tar sands, or from chipseal, roto-mill, or tar sands to asphalt, etc.), or any "improvement," "betterment," or any other change in the nature of the road that may significantly impact public lands, resources, or values.

2. General Road Maintenance Guidelines

Road maintenance shall be conducted to provide a reasonable level of riding comfort at prudent speeds for the route conditions and intended use (BLM Handbook 9113-Roads). Drainage structures will be maintained as needed to ensure all drainage features, such as water bars, culverts, rolling dips, or fords are functioning properly to accommodate high flows and associated debris and sediment. Additional water bars and rolling dips can be constructed as needed following BLM Archeological clearances. See attachments A, B, and C for water bar specifications and spacing. Brushing is conducted as needed to improve sight distance when appropriate for management uses. During routine maintenance and roadway inspection, remove all obstacles within the right-of-way that are potentially hazardous to roadway users. Such obstacles include fallen trees and posts, rocks, brush, trash, dead animals, unauthorized signs, etc. If any vegetation or debris needs to be stored on site, ensure such material is not stored in water ways, road side ditches, water diversion ditches, wetlands, or in riparian areas.

3. Native American Human Remains

Pursuant to 43 CFR 10.4(g), the operator must notify the authorized officer, by telephone, with written confirmation, immediately upon the discovery of human remains, funerary items, sacred objects, or objects of cultural patrimony on federal land. Further, pursuant to 43 CFR 10.4 (c) and (d), the operator must stop activities in the vicinity of the discovery that could adversely affect the discovery. The operator shall make a reasonable effort to protect the human remains, funerary items, sacred objects, or objects of cultural patrimony for a period of thirty days after

written notice is provided to the authorized officer, or until the authorized officer has issued a written notice to proceed, whichever occurs first.

4. Cultural Resources

If subsurface cultural values are uncovered during operations, all work in the vicinity of the resource will cease and the Authorized Officer with the BLM notified immediately. The operator shall take any additional measures requested by the BLM to protect discoveries until they can be adequately evaluated by the permitted archaeologist. Within 48 hours of the discovery, the SHPO and consulting parties will be notified of the discovery and consultation will begin to determine an appropriate mitigation measure. BLM in cooperation with the operator will ensure that the discovery is protected from further disturbance until mitigation is completed. Operations may resume at the discovery site upon receipt of written instructions and authorization by the authorized officer.

5. Cadastral/Survey Status

As directed in 43 CFR 3809.420 - Surface Management - (b) (9) Protection of survey monuments. To the extent practicable, all operators shall protect all survey monuments, witness corners, reference monuments, bearing trees and line trees against unnecessary or undue destruction, obliteration or damage. If, in the course of operations, any monuments, corners, or accessories are destroyed, obliterated, or damaged by such operations, the operator shall immediately report the matter to the authorized officer. The authorized officer shall prescribe, in writing, the requirements for the restoration or reestablishment of monuments, corners, bearing and line trees.

The Public Land Survey conditions in some of these areas are categorized as High Risk according to the latest GCDB inventory. Official records indicate GCDB (and thus GIS) reliabilities to be over 100 ft. When planning the decommissioning of specific closed or unauthorized routes, the following items related to the protection of the Public Land Survey System will be evaluated by the BLM Cadastral Surveyor in coordination with the project manager:

1. An effort should be made by a qualified individual to locate, and protect any original monuments that may exist in the project area.

2. Local research should be conducted to identify private survey records that apply to this area. Any private monuments found as a result should be protected.

3. Closure of roads within the project area near private lands should be determined prior to road closure to avoid closing roads on private land not part of the project.

## 6. Integrated Weed Management Guidance from the Candidate Conservation Agreement

The following information has been taken directly from the Candidate Conservation Agreement for the Gunnison sage-grouse, *Centrocercus minimus,* Gunnison Basin Population (CCA) and is repeated here as part of the Road Maintenance Agreement.

**APPENDIX A. Integrated Weed Management: Preventing the Spread of Invasive Plants**

**A. Background**

Weeds are identified as a "moderate+" threat to GUSG by the USFWS, with the likelihood of "indefinite increases due to increased human presence and climate change." And much research indicates that ground disturbance caused by construction and maintenance activities, as well as unclean equipment, contributes heavily to the spread of invasives.

Recognizing that many weed prevention and management efforts are underway in the region, and many BMPs are already incorporated into standard operating procedures, nonetheless, the participants to early discussion – listed above – identified room for improvement across the agencies and counties. Participants recognize that integrated weed prevention and management measures not only contribute to grouse habitat conservation, but contribute to better resource management in general.

**B. Best Management Practices: Road Maintenance & Ground Disturbance Operations**

In order for a signatory to receive coverage under the CCA and conference opinion, the signatory will apply these best management practices to the extent feasible for work within Gunnison sage-grouse habitat on and through federal lands, including signatories' contractors and right-of-way, easement, and permit holders.

Including but not limited to crown or slope reconstruction; clearing ditches, culverts and catchments; replacement of road surface, roadside mowing operations, and dust abatement.

***SCHEDULE & TIMING***

1. Plan work from non-infested areas to infested areas, as practicable. Plan work with Basin Weed Coordinator or Agency Weed Specialist, using existing weed inventories along planned route.
2. If heavily infested areas are known along planned routes for grading or mowing, work with Basin Weed Coordinator/Agency Weed Specialist to identify sections where it may be appropriate and practical to lift grader's blade or mower deck.
3. Minimize operations of equipment during conditions when mud can accumulate on equipment. Generally, these types of conditions exist when damage to the road resource can occur.
4. When scheduling allows, schedule activity when seeds or propagules are least likely to be viable and to be spread or when grading/blading/mowing could reduce the vigor of the weed infestation.
    - Contact Basin Weed Coordinator or Agency Weed Specialist and refer to Gunnison Basin Weed Inventory GIS database (to be developed).

- Generally grade roads early in the spring before grasses develop seed heads or late in the season after grasses have set seed and become dormant.

***MOBILIZING EQUIPMENT: EQUIPMENT CLEANING***

1. Clean all heavy equipment and mobilizing equipment[1] before entering Gunnison County and West Saguache County.
2. Power-washing is the most effective method of cleaning.
3. Equipment shall be considered free of soil, seeds, vegetation, and other such debris when a visual inspection by operator or staff does not disclose such material on the undercarriage, cross members, frame, skid plates, belly pans, wheels, treads, tracks, suspension, bumpers, wheel wells, radiator grills, and the ledges on the inside of rear and front bumpers. *Disassembly of equipment components or specialized inspection tools is not required.*

***BETWEEN-SITE OPERATIONS: EQUIPMENT CLEANING***

1. Clean all heavy equipment <u>before entering each project</u> area if:
   - Equipment is covered with mud, plants, or other foreign materials and/or
   - Previous operation site was infested with invasive plant species.
2. Power-washing is the most effective method of cleaning, when available. Mechanical removal via "brooming" may be appropriate when in the field.
   - *Ideally, equipment should be washed between each route within Gunnison sage-grouse habitat and/or in between infested areas and non-infested areas.*
   - *Yet the infrastructure – portable power-washing stations—is not yet available in the region.*
   - *Cleaning equipment arriving from outside of the Basin is a good step but not sufficient.*
   - *A practical compromise is that equipment should be cleaned via following methods:*
     - *Commercially washed whenever movement between sites takes operators through towns with commercial facilities;*
     - *Hose-washing in staging area/area with drain may suffice;*
     - *In the field: mechanical removal may be appropriate in the field.*
3. Equipment shall be considered free of soil, seeds, vegetation, and other such debris when a visual inspection by operator or staff does not disclose such material on the undercarriage, cross members, frame, skid plates, belly pans, wheels, treads, tracks, suspension, bumpers, wheel wells, radiator grills, and the ledges on the inside of rear and front bumpers. *Disassembly of equipment components or specialized inspection tools is not required.*

***ON-SITE OPERATIONS & OPERATOR EDUCATION***

1. Locate and use weed-free project staging areas.
2. Avoid acquiring water for road dust abatement where access to the water is through weed-infested sites.

---

[1] earth-moving equipment; does not include pickup trucks and personal vehicles.

3. Only use gravel, chip seal, soil, sand or other types of imported road/fill materials from sites that have no weed infestations.
    - For agency/County work, these sites should be identified or inspected by the Gunnison Basin Weed Coordinator or Agency Weed Specialist prior to mobilization.
    - For contracted work, a list of agency or County-recommended sources will be provided and recommended to contractor.
    - In the future, should a state or local weed-free certification program for road/fill materials be initiated, participating entities in the CCA will adopt the certification standards and require use of certified weed-free road/fill materials for their own and contracted work.
4. Only grade the road or mow the shoulder when necessary for resource protection, safety, or function.
5. As practicable, keep the grader's blade 1 to 2 inches above the road surface when the primary goal is to remove rocks that have fallen onto the road.
6. Annually, train operations and maintenance staff in the identification of invasive plant species and relevant weed BMPs.

***RESEEDING & RECLAMATION***

1. During the same growing season that the ground disturbance takes place/within 30 days following completion of construction, revegetated the newly disturbed sites with approved seed mixes.
    - Identify party responsible for revegetation work if work is contracted.
    - If ground disturbance occurs after late August/average date of first frost, generally delay reseeding until October 1/average date of consistent frost to ensure seedlings remain dormant and viable until following growing season (NRCS guidance, Scott pers comm). *Date may vary depending upon elevation.*
    - Consult Agency Weed Specialist, Botanist, or Ecologist for approved seed mixes. The agencies and/or the Weed Commission will work together to provide suitable seed mixes.
    - For surfaces that are annually graded and cleaned, including the road prism[2] and water bars, revegetation would not be appropriate.
    - Culvert installation and lead-out ditch construction should be revegetated.
    - Seeding shall be repeated if a satisfactory stand is not obtained as determined by the agency representative upon evaluation after the second growing season.
2. Use only weed-free (certified when available) erosion control devices, such as coir logs, erosion control blankets, straw, topsoil, and soil amendments. Wattles, jute mats, and rice straw are examples of weed- free products.
3. Following ground-disturbing activities, treat infested areas with herbicides, hand pulling, or biological controls as deemed necessary by Basin Weed Coordinator or Agency Weed Specialist.

---

[2] Road prism is area from the top of the cut to the bottom of the fill.

- Unless otherwise agreed, surfaces that are annually graded and cleaned, including the road prism and water bars, do not require treatments.
- Culvert installation and lead-out ditch construction areas should be treated.

***INVENTORY & MONITOR***

1. Agencies and Counties should inventory areas for invasive plants prior to their own/contracted road maintenance activities and ground-disturbing construction and flag these areas for avoidance or post-project treatment *(see Treatments section, above)*. Inventories should include the following information:
    - Road number and mile markers
    - UTM's
    - Infestation type, i.e. existing infestations
    - Infestation size
    - Cover class
    - Type(s) of species observed
2. Update Gunnison Basin Weed Inventory GIS database at minimum once a year.
    - Gunnison Basin Weed Coordinator will annually coordinate with agencies to collect, compile, and make available most updated weed inventory information.
3. Monitor sites between two and three years following all treatments, as practicable. Prioritize monitoring in priority grouse habitat.
    - Unless the Weed Commission can absorb the work load, the agency will be responsible for monitoring.

**C. Terms and Conditions for Contractors, Rights-of-Way & Easement Holders**

In order for a federal signatory to receive coverage under the CCA and conference opinion, federal signatories will incorporate these terms and conditions into new and renewed individual right-of-way authorizations, easements and permits on federal lands within GUSG habitat.

In order for non-federal and federal signatories to receive coverage under the CCA and conference opinion, signatories will apply these terms and conditions to both internal and contracted work to maintain and construct infrastructure within Gunnison sage-grouse habitat on federal lands.

Unless otherwise agreed, to prevent the introduction of the seeds of noxious and invasive weeds onto lands within occupied Gunnison sage-grouse habitat on federal lands:

***CLEANING***

Contractor, utility, or individual operator shall ensure all heavy equipment moved onto lands is free of soil, seeds, vegetative matter, or other debris that could contain or hold seeds.

1. Equipment shall be considered free of soil, seeds, vegetation, and other such debris when a visual inspection by operator or staff does not disclose any such material on the undercarriage, cross members, frame, skid plates, belly pans, wheels, treads, tracks, suspension, bumpers, wheel wells, radiator grills, and the ledges on the inside of rear and front bumpers.

2. For equipment arriving from outside Gunnison County and West Saguache County, operator shall clean all heavy equipment and mobilizing equipment[3] before entering Gunnison County and West Saguache County.
3. Although power-washing is the most effective method, prior to moving between sites *in the field*, operator shall employ **whatever cleaning methods necessary** to ensure compliance with the terms of this provision.
4. Movement between field sites that *requires travel through or return to Gunnison/urban center* shall be accompanied by power-washing at a commercial washing station, **if one is available**.
5. Disassembly of equipment components or specialized inspection tools is not required.

***NOTIFICATION***

Contractor, utility, or individual operator shall notify agency representative prior to moving each piece of heavy equipment onto such agency-administered lands, unless otherwise agreed.

1. If the agency representative requests an inspection, arrangements will be made to inspect equipment prior to it being moved onto agency lands.
2. Use of contractors by individual private ROW/easement holder would require agency notification, with the following exceptions:
    - Private land access ROWs/easement holders operating own equipment are excepted from this measure, unless otherwise agreed.
    - Does not apply to snow removal equipment.

***SOURCING/STAGING***

When the agency/County specifically provides the necessary information, contractor/utility/individual operator shall:

1. Use identified/mapped weed-free project staging areas.
2. Use identified/mapped access routes and water sources for road dust abatement.
3. Use only gravel, chip seal, soil, or other types of imported road materials from agency-approved or inspected sources.
4. Use identified/mapped turn-around locations.

[3] earth-moving equipment; does not include pickup trucks and personal vehicles.

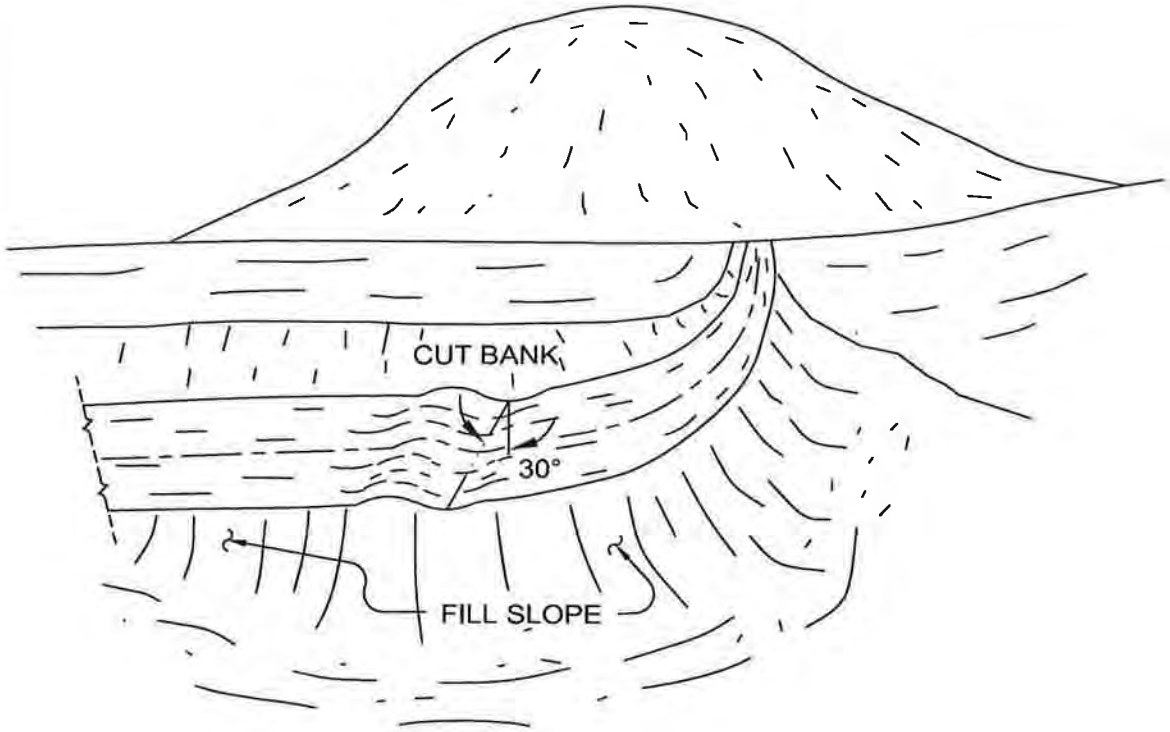


## SCHEMATIC VIEW WATER BAR

The dimension "X" varies from 20' on slopes under 8% to a minimum of 10' for steeper slopes.

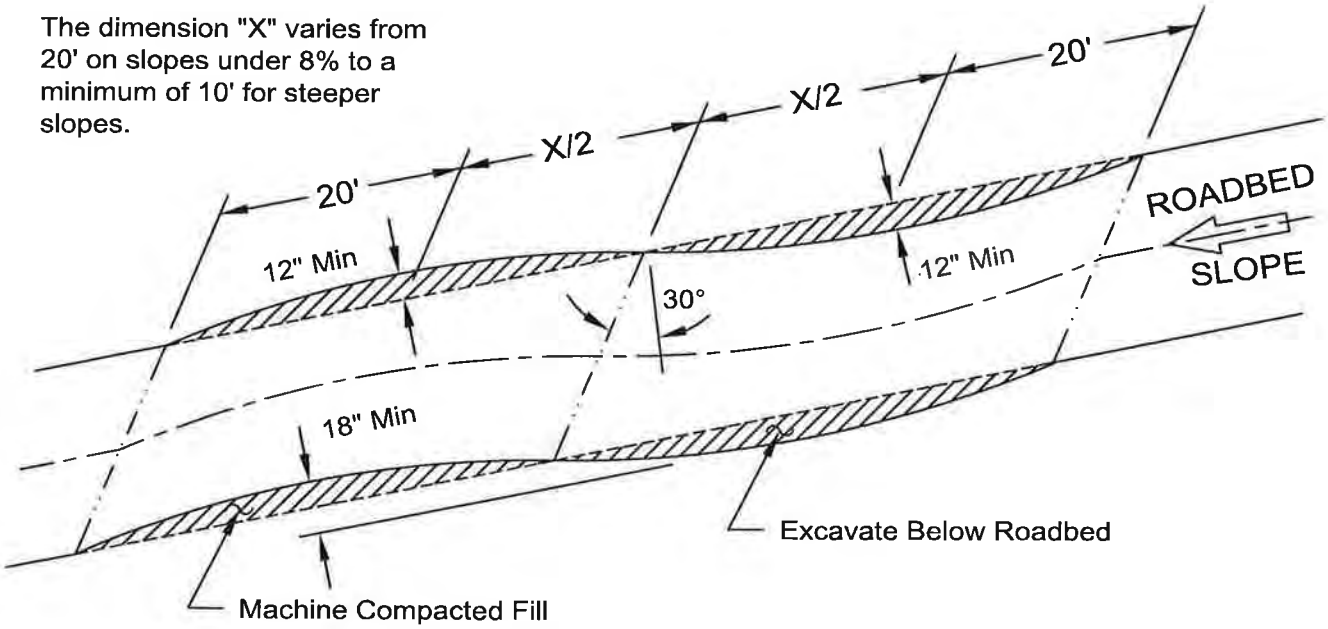


## TYPICAL WATER BAR

NOTES:

Slope of ditch across road to be 2% greater than slope of road.

The drawings titled "TYPICAL" are general and the dimensions of each structure will be determined by the Contracting Officer to fit the existing conditions.

ALWAYS THINK SAFETY

UNITED STATES DEPARTMENT OF THE INTERIOR
BUREAU OF LAND MANAGEMENT
ENGINEERING FIELD OFFICE

TYPICAL WATERBAR

DESIGNED by others
REVIEWED Larry Gebhart
APPROVED Mike Mitrison

| | |
|---|---|
| DRAWN Vecchia | SCALE As Shown |
| DATE 4/91 | SHEET 35 OF 35 |
| DRAWING NO. CO-940-2 | |

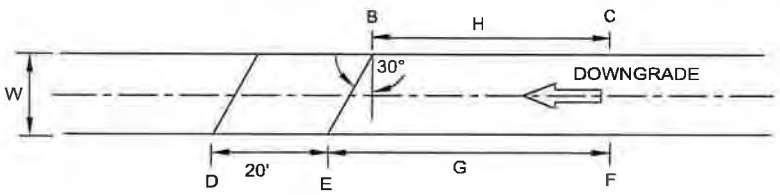


## PLAN

NO SCALE

| ROAD GRADE IN % | 30° ROLLING DIP W 23' | | | |
|---|---|---|---|---|
| | LENGTH | | DEPTH | |
| | G | H | I | J |
| < 6 | 64 | 50 | 1.30 | 0.30 |
| ≥ 6 | 69 | 55 | 1.35 | 0.30 |

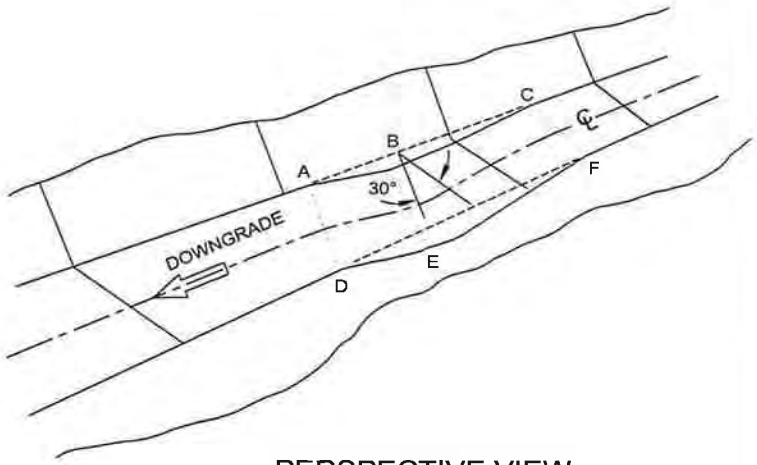


## PERSPECTIVE VIEW

NO SCALE

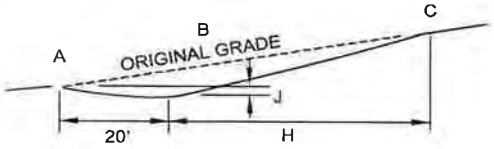


## PROFILE A-B-C

NO SCALE

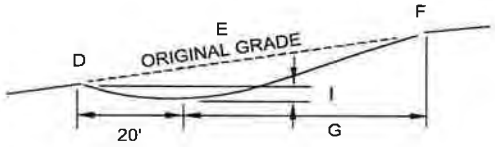


## PROFILE D-E-F

NO SCALE

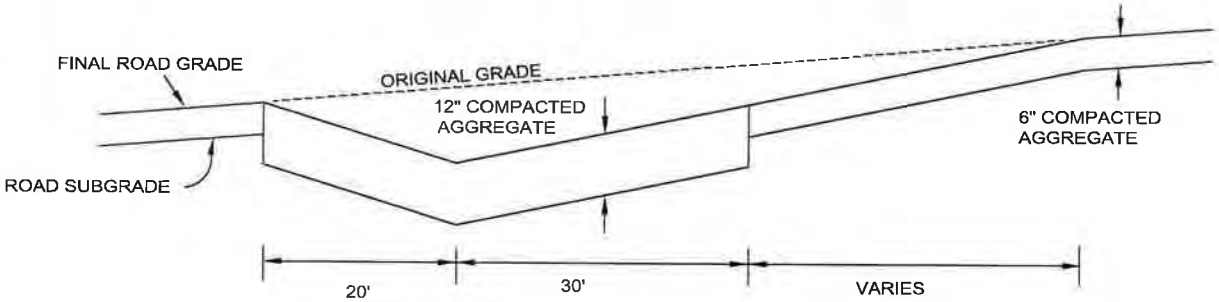


## SURFACED ROLLING WATER DIP PROFILE

NO SCALE

NOTES:

1. DETAILS SHOWN ARE FOR A ROADBED WITHOUT A DITCH. DIPS WILL BE CONSTRUCTED IN A DITCHED SECTION BY TRANSITIONING THE DITCH INVERT FROM NORMAL DITCH DEPTH TO DIMENSION "J" BETWEEN POINTS "B" AND "C". RESUME DITCH CONSTRUCTION 20' DOWNGRADE FROM POINT "A".
2. DIP OUTLETS WILL BE CONSTRUCTED TO DRAIN FREELY AWAY FROM ROAD. OUTLET DITCHING MAY BE REQUIRED TO ACCOMPLISH THIS.
3. MATERIAL EXCAVATED FROM ROLLING WATER DIPS AND WATER DIP CONSTRUCTION WILL BE WASTED AT DESIGNATED LOCATIONS.
4. SEE STANDARD DETAIL SHEET FOR AGGREGATE GRADATION. PLASTICITY AND COMPACTION REQUIREMENTS.

# ROLLING WATER DIP

ALWAYS THINK SAFETY

U. S. DEPARTMENT OF THE INTERIOR
BUREAU OF LAND MANAGEMENT
ENGINEERING FIELD OFFICE – COLORADO

ROLLING WATER DIP
project ???

| | |
|---|---|
| DESIGNED By Others | |
| REVIEWED | |
| APPROVED | |
| DRAWN By Others | SCALE As Shown |
| DATE 12/21/93 | SHEET 1 OF 1 |
| DRAWING NO. CO-940-Section | |

| Recommended Spacing for Lateral Drainage Culverts in Various Soil Types* | | | | | | | | | | |
|---|---|---|---|---|---|---|---|---|---|---|
| | Erosion Index | | | | | | | | | |
| Soil Types | 10 | 20 | 30 | 40 | 50 | 60 | 70 | 80 | 90 | 100 |
| Silty sands, sand-silt mixtures, inorganic silts and very fine sands, silty or clayey fine sands | | | | | | | | | | |
| Inorganic silts, micaceous or diatomaceous fine sandy or silty soils, elastic silts, organic silts or organic silty clays or low plasticity, inorganic clays of low to medium plasticity, gravelly clays, sandy clays, silty clays, lean clays | | | | | | | | | | |
| Organic clays of medium to high plasticity, organic silts, inorganic clays of high plasticity, fat clays, clayey sands, sand-clay mixtures, silty-gravels, gravel-sand-silt mixtures | | | | | | | | | | |
| Clayey gravels, gravel-sand-clay mixtures | | | | | | | | | | |
| Clean sands or clean gravelly sands | | | | | | | | | | |
| Clean gravels or sand-gravel mixtures | | | | | | | | | | |

* Unified Soil Classification

| Recommended Spacing (ft) | | | | | | | | | | |
|---|---|---|---|---|---|---|---|---|---|---|
| | Erosion Index | | | | | | | | | |
| Gradient (%) | 10 | 20 | 30 | 40 | 50 | 60 | 70 | 80 | 90 | 100 |
| 2 | 900 | 1225 | | | | | | | | |
| 3 | 600 | 815 | 1070 | 1205 | | | | | | |
| 4 | 450 | 610 | 800 | 905 | 1015 | | | | | |
| 5 | 360 | 490 | 640 | 725 | 810 | 865 | 1000 | | | |
| 6 | 300 | 410 | 535 | 605 | 675 | 720 | 835 | 1010 | | |
| 7 | 255 | 350 | 455 | 515 | 580 | 620 | 715 | 865 | 1030 | 1210 |
| 8 | 225 | 305 | 400 | 450 | 505 | 540 | 625 | 755 | 900 | 1055 |
| 9 | 200 | 270 | 355 | 400 | 450 | 480 | 555 | 670 | 800 | 940 |
| 10 | 180 | 245 | 320 | 360 | 405 | 435 | 500 | 605 | 720 | 845 |
| 11 | 165 | 220 | 290 | 330 | 370 | 395 | 455 | 550 | 655 | 770 |
| 12 | 150 | 205 | 265 | 305 | 340 | 360 | 415 | 505 | 600 | 705 |
| 13 | 140 | 190 | 245 | 280 | 310 | 335 | 385 | 465 | 555 | 650 |
| 14 | 130 | 175 | 230 | 260 | 290 | 310 | 355 | 430 | 515 | 605 |
| 15 | 120 | 165 | 215 | 240 | 270 | 300 | 335 | 405 | 480 | 565 |
| 16 | 115 | 20 | 200 | 225 | 255 | 280 | 310 | 380 | 450 | 530 |

Note: This table is based on rainfall intensities of 1 to 2 inches per hour following a 15 minute period with an expected interval reoccurance of 25 years. For areas having intensities other than 1 to 2 inches per hour, divide values in the table as follows:

| Rainfall Intensity | Divisor |
|---|---|
| 2-3 inches per hour | 1.50 |
| 3-4 inches per hour | 1.75 |
| 4-5 inches per hour | 2.00 |
| Less than 1 inch per hour | Whatever the intensity (.75, .85, etc.) |

Derived from AASHTO "A Policy on Geometric Design of Highways and Streets, 2004."

ILLUSTRATION 10 – SPACING FOR DRAINAGE LATERALS