AGENDA ITEM or FINAL CONTRACT REVIEW SUBMITTAL FORM

AgendaTitle:
Riverland Industrial Park Fire Protection

Action Requested: Discussion

Parties to the Agreement:

Term Begins: **Term Ends:** **Grant Contract #:**

Summary:
Update on the status of fire protection improvements within Riverland and to discuss next steps, if any.

Fiscal Impact:

Submitted by: Crystal Lambert **Submitter's Email Address:** clambert@gmail.com

Finance Review: ○ Required ◉ Not Required

Comments:

Reviewed by: Discharge Date:

County Attorney Review: ◉ Required ○ Not Required

Comments:

Reviewed by: GUNCOUNTY1\atrezise Discharge Date: 1/15/2015 Certificate of Insurance Required

Yes ○ No ◉

County Manager Review:

Comments:

Reviewed by: GUNCOUNTY1\khaase Discharge Date: 1/16/2015

○ Consent Agenda ○ Regular Agenda ◉ Worksession Time Allotted:

Agenda Date: 1/20/2015 Follow Up Agenda Date:

Revised April 2013

Gunnison County Community
Development Department
Offices of Planning, Building and Environmental Health
221 N. Wisconsin St., Ste. D
Gunnison, CO 81230
Phone: (970) 641-0360 Fax: (970)641-8585

TO: **Board of County Commissioners**
Matthew Birnie, County Manager
David Baumgarten, County Attorney
Russ Forrest, Community Development Director

FROM: **Crystal Lambert, Building Official**

Date: **January 20, 2015**

SUBJECT: **Discussion of Riverland and Fire Protection Options**

A. PURPOSE AND SUMMARY OF ISSUES:

The purpose of this item is to provide an update on the status of fire protection improvements within the Riverland Industrial Park and to discuss next steps, if any. On March 18th, 2014, the Board of County Commissioners directed staff to work with the Crested Butte Fire Protection District (CBFPD) to find a solution to the fire/life safety risk present at the Riverland Industrial Park.

A report by Shaner Life Safety (Attachment A), provided an assessment of the fire/life safety risk associated with the Riverland Industrial Park and future development. Ms. Shaner recommended both long and short term solutions to improve life safety overall. The long term solution is based on achieving the following four design criteria:

1. A minimum of 35,000 gallons of fire protection water storage.
2. Distribution of the water at 500 gpm
3. Distribution system pressurized at a minimum of 20 psi
4. A minimum of 3 fire hydrants installed spaced to provide water distribution throughout the subdivision.

Riverland chose Norman Whitehead, a professional engineer with NCW & Associates, Inc. to provide a fire protection improvements plan (Attachment B) based on the design criteria provided by Ms. Shaner's report. Initially Mr. Whitehead believed that the distribution of water could achieve 750 gpm. This figure was based on assumptions about the size and material type of the existing water distribution lines. Excavation work, conducted later in the summer, revealed that the existing water lines were different than what was initially assumed and would not be able to support a 750 gpm distribution without damage to the water service and fixtures. Mr. Whitehead has calculated that the system pressures need to be kept around 110 psi, which brings the water distribution down to 500 gpm.

On May 13th, 2014, the Crested Butte Fire Protection District passed resolution 2014-3 (Attachment C), which acknowledges the unique characteristics of Riverland and the impractical cost of retrofitting the water lines and which provides Riverland with a modification to the fire code regulations. The new requirements for Riverland became the content of Ms. Shaners report with the following adjustments to the design criteria:

1. A minimum of 35,000 gallons of fire protection water storage guaranteed for fire flows at all times.
2. Distribution of the water at 750 gpm to all fire hydrants.
3. Distribution system pressurized at a minimum of 20 psi residual pressure.
4. Fire hydrants shall be spaced every 500 feet throughout the subdivision.

This resolution was passed is the spring of 2014, a time when it was believed, by all parties, that a 750 gpm distribution of water could be achieved without significant replacement of infrastructure.

For comparison, the Riverland Fire Protection Improvement Plan provided by Mr. Whitehead achieves the following design criteria:

1. Use 2 tanks to provide 35,000 gallons of fire protection water storage with system controls that will turn off domestic water pumps at each tank if minimum fire storage levels are reached.
2. Distribution of the water at 500 gpm.
3. Distribution system pressurized at a minimum of 20 psi.
4. Fire hydrants spaced at a maximum of 500 feet.

Ms. Shaner has reviewed Mr. Whitehead's plan and believes that is does accomplish the goals and design criteria that was outlined in her report. Unfortunately, the distribution of water falls short of the Crested Butte Fire Protection Districts requirement of 750 gpm and when contacted for a discussion of the issue the District asserted that no further concessions would be made.

At this time Riverland has moved forward with the construction of a 35,000 gallon tank and completed, as staff understands, the placement of the five hydrants.

B. OPTIONS FOR CONSIDERATION:

The Crested Butte Fire Protection District has indicated to staff that it has made its position clear with its Resolution on May 13, 2014. This again creates an in-pass between Riverland and the District. To address this in-pass staff provides the following options for consideration:

Option 1: Take no further action. Riverland Industrial Park is currently installing the fire protection improvements designed by NCW & Associates, Inc. and the 33 existing developed lots will have improved life safety. However, the 6 undeveloped and future additions to the 33 developed lots will need to provide additional fire flows and possibly sprinkling before future development can occur. The Crested Butte Fire Protection District has modified the Fire Code within Riverland recognizing that it is a unique situation and Riverland will need to meet the requirements of the agreement before development can proceed.

Option 2: County code/appeal process and CBFPD administration. Gunnison County could adopt the 2003 IFC and the current CBFPD Guidelines, Standards and Fees and amendments thereto within the unincorporated areas of Gunnison County within the CBFPD. An agreement between Gunnison County and the CBFPD to administer the IFC could be made. The appeal process would take place with the County. The technical expertise of a fire safety professional could be utilized to review performance based design proposals.

This option creates a governance issue as the CBFPD receives public funding to administer the code and is responsible for that code, including the interpretation of the code, evaluation of alternative materials and methods, and the appeal process. An applicant could be required to pay the cost for a review from a fire safety professional.

Option 3: Eliminate the 2003 IFC and the current CBFPD Guidelines, Standards and Fees and amendments thereto within the unincorporated areas of Gunnison County within the CBFPD. The Board can repeal the fire code. Builders and project developers would utilize the County's adopted building codes. The International Fire Code is not adopted for the unincorporated area of Gunnison County not in the CBFPD. The County coordinates with the Gunnison Fire Prevention District on every commercial building permit and other technical code questions related to life safety/fire protection. Fire safety professionals are also utilized to review complex and potentially hazardous structures and uses.

Option 4: Utilize Shaner recommendations versus prescriptive requirements of the IFC. The Riverland Industrial Park has unique historical circumstances that support a special area designation. The Park was initially developed outside the boundaries of the CBFPD and before the adoptions of the 2003 IFC and the current CBFPD Guidelines, Standards and Fees and amendments thereto. The Riverland Industrial Park is the only mixed-use development within the Fire District, containing residential, commercial and industrial occupancies. The existing Park infrastructure cannot support prescriptive compliance with the Fire Code or the adjusted design criteria established in the CBFPD Resolution 2014-3. There would be an additional cost burden associated with upgrading the existing water lines.

A special area designation would be supported by the Shaner study and the requirements of the recommendations in the study would become a requirement for future development versus prescriptive utilization of the Fire Code. In addition, potentially hazardous proposed uses could be individually reviewed by a fire safety engineer, along with comments provided by the CBFPD, prior to permitting.

Staff's recommendation is dependent on the final outcome desired by the Board of County Commissioners. If a surgical solution to address the Riverland impasse is desired, then staff would recommend Option 4. The Shaner Life/Safety Fire Protection Study assessed the life safety risk existing within the Riverland Industrial Park and provided solutions to achieve compliance with the CBFPD standards and provide an effective level of life safety for the occupants of the subdivision. Riverland has already begun implementing the recommendations of the Shaner study, recognizing that they can achieve the design criteria established in the study. Although the Fire District generally agrees with the Shaner study, they have set design criteria above what is established in the study and above what Riverland can feasibly implement at this time.

Attachments

Attachment A: Shaner Life Safety/Fire Protection Report
Attachment B: NCW & Associates, Inc. Riverland Industrial Park Fire Protection Improvements
Attachment C: CBFPD Resolution 2014-3 & General Outline of Agreement

Riverland Industrial Park
Life Safety/Fire Protection Report

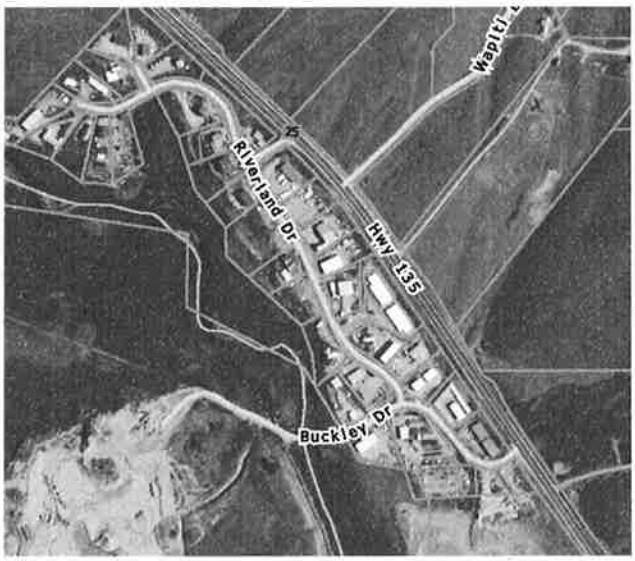

Prepared by:
Deborah Shaner, P.E.
Fire Protection Engineer

Shaner Life Safety

February 14th, 2014
(REVISION #1)

Objective

The objective of this report is to address the following questions as presented by the Gunnison County Board of County Commissioners.

1. Is there an unacceptable fire/life safety risk associated with the Riverland Industrial development?
2. If there is an unacceptable risk at Riverland, what are the short term solutions, if any, to facilitate development on the final six undeveloped lots and improve life safety for the development?
3. What are long term solutions to provide a more permanent solution for life safety for the Riverland Industrial development?

The primary focus of this report is on the water supply available for fire protection purposes at the Riverland Industrial Park. Other fire protection factors and systems have been evaluated, considered and included in formulation of solutions as applicable.

Statement of Problem

Based on site observations, review of documentation and discussions with interested parties, the general statement of the problem at hand is as follows:

Riverland Industrial Park was developed prior to the International Fire Code being adopted within the Crested Butte Fire Prevention District. There was not a conflict between Riverland development and applicable Fire District regulations until 2008 when Gunnison County authorized the CBFPD to adopt the 2003 International Fire Code with amendments. Although a lack of fire flows to the projects had been documented by the CBFPD over the years, it was not until 2008 when the IFC went into effect for the District did new requirements come into play for construction in Riverland. The effect of this regulation has been that the six undeveloped lots and other new structures on the property require either a fire suppression system to be installed or must provide adequate fire flows to new structures. This to date has been cost prohibitive since the project as a whole lacks adequate water storage, water lines, and hydrants for fire suppression. This issue came to a head when a building permit was requested for a new building on the site and was not approved by the Fire District.

Existing conditions and infrastructure do not readily allow for quick improvements to be made to resolve the issue. Existing conditions must be acknowledged and accepted while entering into any solution agreements between interested parties. A solution must be cost effective to allow for actual implementation while meeting the intent of applicable codes to the extent possible.

Site Description

The Riverland Industrial Park is located approximately 3 miles south of the Town of Crested Butte and consists of 38 lots. Filing #1 (Lots 1-15) contains Heavy Industrial uses and Filing #2 (Lots 16-38) consists of Light Industrial uses. There are approximately one dozen residential units located throughout the site. Most buildings are constructed with metal materials, Type 5B construction, with square footages ranging from 1,500 – 10,000 square feet. The average size per building is approximately 4500 square feet.

Refer to Attachment #1, Riverland Lot Overview spreadsheet for a summary of building usage, size and construction throughout the industrial park.

In the event of a fire, the park is served by Crested Butte Fire Protection district, with station #1 located approximately 3.5 miles away. The fire department is capable of responding with an engine, pump truck, water tender truck and various EMS response vehicles. This fire department is primarily volunteer, so a successful response is dependent on the availability of necessary crew members.

Filing #1 has a maximum building size of 10,000 square feet and a height of 24' for flat lots. Filing #2 has a maximum building size of 4500 square feet at a 24' height for flat lots and 36' for sloped lots per the published covenants. There are no zoning restrictions in place for the industrial park.

There is a Pumphouse which serves the domestic water needs of the entire industrial park located at the corner of Riverland Drive and Buckley Drive. A storage tank providing approximately 20,000 gallons of water is installed underground at the Pumphouse location. The capacity of the tank is 30,000 gallons, but currently water levels are maintained at 20,000 gallons. This water is distributed throughout the development through underground water lines, which generally follows the path of Riverland and Buckley Drives. Water lines are sized at 2", 4" and 6", varying throughout the complex.

Code Basis

Gunnison County's Resolution 08-47 authorizes the Crested Butte Fire Protection District (CBFPD) to adopt the 2003 International Fire Code with amendments within their jurisdictional area. This adoption includes implementation of the Crested Butte Fire Protection District's "Standards and Guidelines Policy" dated December 14, 2010.

In evaluating the fire protection and life safety conditions at the Riverland Industrial Park, the goal of meeting the intent of CBFPD codes and standards has been considered. Of course, there are existing conditions in place which must be acknowledged and included in any solutions, but compliance with at least the intent of fire department codes should be a general goal. This removes any concern for undesirable precedents to be set, minimizes the request for waivers and shows good faith for future development.

Applicable sections of CBFPD Standards are noted below. These code sections are applicable to proposed solutions outlined later in this report.

Access

In general, Riverland Industrial Park has good fire department access to all lots in the complex. In accordance with CBFPD Standards Section 201C, two points of access into the development are provided. Most buildings are well marked with addresses and driveways are clear and provide for fire department and emergency vehicle access.

Water Supply

Per Section 301A, CBFPD Standards, "A central water supply is required when the subdivision density is greater than one dwelling unit per two acres." Because there are residential units in the park, a central water supply is required. The definition of a central water supply is "a water distribution system capable

of delivering the required fire flow as determined by Appendix B of the 2003 International Fire Code." If the 2003 International Fire Code (IFC) requirements are imposed on the complex, a *minimum* fire flow of 1500 gpm would be required. The Riverland site does not have adequate water storage and distribution in place to meet the requirements of the 2003 IFC. In fact, the water supply was not designed to provide fire protection water, only to meet domestic demands.

The presence of residential units creates the need for a central water supply throughout the subdivision. Any new development, regardless of whether the building contains residential units, would trigger the requirement for central water supply. In other words, this is a subdivision requirement, not a single lot or building requirement.

Crested Butte Fire Protection District standards do offer alternatives for water supply for subdivisions that do not have the infrastructure in place to meet IFC requirements. Section 303, CBFPD standards states "In subdivisions, P.U.D.s or any other buildable parcel of land within the Crested Butte Fire Protection District without a central water supply, an alternate water source approved by the Fire Chief shall be established to provide the required storage. NFPA 1142 Standard on Water Supplies for Suburban and Rural Fire Fighting, current edition, shall be used as a guide in establishing requirements."

An NFPA 1142 analysis is included later in this report.

Fire Sprinkler Systems

When water supply deficiencies exist, CBFPD Standards require fire sprinkler systems as follows:

Section 402, "New subdivisions and PUD's. An automatic fire suppression system shall be installed in all structures in all new subdivisions or PUD's where there is not installed a central water supply capable of providing the required fire flows per the IFC 2003 edition appendix B.

1. All structures shall have installed a fire suppression system in accordance with NFPA 13 Standard for the Installation of Sprinkler Systems, 13D Standard for the Installation of Sprinklers Systems in One- and Two-Family Dwellings and Manufactured Homes or 13R Standard for the Installation of Sprinklers Systems in Residential Occupancies up to and Including Four Stories in Height, current edition, by covenant and,
2. Installed fire protection systems shall be monitored and supervised by an approved central station fire alarm company and,
3. The size of the storage tank shall be double the required amount per the applicable NFPA standard or based on 30 gallons per minute response time, at posted speed limits, measured from the nearest fire station, whichever is greater.

The International Fire Code (IFC) and International Building Code (IBC) provide guidance for sprinkler requirements for buildings as well regardless of the available water supply. For the purpose of this report, it is important to note requirements for mixed use buildings with residential uses. Section 903.2.7, IFC states "An automatic sprinkler system...shall be provided throughout all buildings with a Group R fire area." A Group R fire area refers to Residential uses as defined by the building code. Basically, any building which houses a residential use must be sprinklered under the 2003 IFC. This includes mixed use buildings with only partial residential use.

Sprinkler requirements for non-residential buildings are determined through an allowable area analysis dependent on construction type, use, square footage and site conditions. Future buildings constructed at Riverland are subjected to this analysis and should be sprinklered accordingly as required.

Assessment of Risk

Several factors contribute to the level of risk present at Riverland. First and foremost, the presence of residential units has the most impact on the requirements for fire protection, water supply and general life safety at the complex. Model codes including the International Building Code and International Fire Code contain extensive provisions for fire and life safety requirements when residential occupancies are present.

In the event of a fire, the number one concern is occupant safety – getting people out of a building to safety is the most important goal in the design of fire protection systems and features. When persons are sleeping within a building, the added factor of waking them up, orienting them to their surroundings and notifying them of an emergency must be considered. There are multiple fire hazards associated with residential occupancy, namely cooking, candles, heating appliances and smoking. These activities are in the top ten causes of fire as reported by the National Fire Protection Association.

Another factor for establishing the level of risk at Riverland is the variety of occupancies present there. Additionally, the potential for new businesses and construction could bring additional hazards. Currently, there are businesses which house paint storage, tire storage, automobile repair and mini public storage. None of these businesses appear to house quantities of hazardous materials which would exceed that allowed for a non-hazardous occupancy (as defined by the Building Code).

There are conditions which exist at Riverland that reduce the risk associated with fire. Exterior housekeeping is generally good. Most buildings are constructed of metal and buildings are generally small. Adequate separation between buildings is present to reduce fire spread and trees and foliage are at a minimum.

The Riverland Industrial Park covenants limit the size and number of buildings allowed on each lot. This minimizes fire hazard and is an important factor in establishing a limited level of risk. Fire load and fire spread will be limited due to the restrictions written into the covenants.

Property owners in Riverland enter into possession with limited expectations for fire protection. The covenants acknowledge the absence of fire protection water. In the Declaration of Protective Covenants for Riverland Industrial Park, Section 4, Item P, sub item 1 states "This project is being developed in an essentially rural environment without the necessary water supply system to provide firefighting protection at urban levels. The owner or occupant of each site within the project must accept a rural level of fire protection. The primary responsibility for fire protection rests with such owner or occupant of a site within a project."

Due to several industrial uses present at Riverland, there is a risk of carbon monoxide poisoning to occupants, especially those sleeping in residential units. The short term solution outlines recommendations for mitigating this risk.

The Crested Butte Fire Protection District is primarily a volunteer fire department. The department is well equipped and can respond with a variety of trucks and tools for conducting firefighting operations. There is concern for available personnel, particularly with Fire Stations #2 & #3. Any long term solutions to be implemented at Riverland will be costly. Consideration must be given to the available budget, the cost for improvement to a prescriptive level of compliance and the cost-benefit associated with these improvements. In other words, improvements which will not be utilized or will not substantially improve life safety should not be executed.

Provided the short term solution as outlined below is implemented, with consideration of the existing conditions, it is reasonable to accept the level of risk at Riverland. The recommended immediate improvements are outlined in the "Short Term Solution" section below. Acceptance of this risk is contingent upon Riverland continuing to work towards a long term goal of compliance with Crested Butte Fire Protection District water supply requirements.

Short Term Solution

Assuming property owners, the Riverland HOA and governing authorities are willing to accept the level of risk in place due to existing conditions and past development, there are several improvements that could immediately be implemented to minimize this existing level of risk. As a long term solution will likely take time to fund, design and implement, this short term solution is proposed to allow for construction to proceed in the park. It is recommended that acceptance of this short term solution is dependent on a written plan for a long term solution being presented.

Note that if Riverland decides to move directly into implementation of the long term solution, the short term solution is not necessary or mandatory. This is simply here to provide an optional alternative to immediate implementation of the long term solution.

Recommendations for a short term solution are as follows:

1. *Install monitored fire alarm systems in all buildings housing residential units:* Per the IBC & IFC, residential units are required to have smoke detectors and carbon monoxide detectors installed. However, these detectors are not required to be monitored. Monitored fire alarm systems consist of a control panel with a dialer or other communicator to provide an automatic call to the responding fire department in the event of a fire alarm. These are common in several jurisdictions in Colorado and are a cost effective alternative to other required systems such as fire sprinklers in some cases. In Riverland, this item can provide for achieving the main goal of protecting sleeping occupants in the event of a fire. A monitored system would include supervised smoke detectors and carbon monoxide detectors in each residence. Additional devices could be installed in the commercial portions of the buildings. A separate system would be provided for each building.

2. *Evaluate egress for residential units:* Readily available, clear, well-marked egress is key in tending to the life safety of residential occupants. Each residential unit should have an egress analysis to ensure proper, safe exiting is available.

3. *Ensure covenant limitations are enforced:* One of the main factors which contribute to a lower level of risk at Riverland is the limitation of the size and height of buildings. Lower density is

equal to lower fire risk. Develop a plan with the building department to ensure building permit applications are within the limitations of the covenant.

4. *Prohibit Group H occupancies from moving into Riverland:* This is basically an unwritten rule due to covenants and building codes. However, rather than open Riverland up to increasing its existing level of risk, no Group H occupancies should be allowed. This will limit the quantity and use of flammable and combustible liquids, eliminate dangerous industrial processes which promote ignition of fire and keep control of hazardous materials present.

5. *Conduct walk throughs of each lot with the fire department to evaluate and improve housekeeping:* These site visits are intended to improve housekeeping on each lot and reduce the potential for a fire. The scope of these site visits needs to be carefully outlined prior to their start. They are not intended to evaluate sprinkler coverage or building construction issues. The walks would be intended to find immediate, low cost improvements to be made to the site. Results would be recommendations only. For example, issues which could be identified include presence of trash or debris which is combustible, blocked egress, poor ventilation of heating appliances, open or poorly stored hazardous materials, etc. Annual inspections by Crested Butte Fire Protection District are also recommended.

Long Term Solution

The recommended long term solution is compliance with CBFPD standards, specifically Section 303 for Alternative Water Supplies. This involves making site improvements to achieve a minimum water supply storage and distribution as recommended by NFPA 1142, *Standard on Water Supplies for Suburban and Rural Fire Fighting.*

An NFPA 1142 analysis is included as Appendix #2 of this report. The analysis suggests approximately 33,375 (round up to 35,000 for design purposes) gallons of water is necessary on site to satisfy the recommendations of this standard. This is based on analyzing Lot 12, Waste Management Building, which is the most demanding building with respect to site fire flow. In addition to the detailed analysis for Lot 12, the NFPA 1142 formula was applied to each lot to approximate the volume of water needed. These results can be found as part of the Appendix 1, Riverland Lot Overview. Water storage requirements range from 2000 gallons to 33,375 gallons.

In addition to water storage, the rate of delivery must be established. Table 4.6.1, NFPA 1142 provides recommended water flow rates in gpm depending on the volume of water storage required. As noted in the Appendix 1 spreadsheet, the volume of delivery recommended varies from 250 gpm to 1000 gpm throughout the various lots at Riverland. The recommended flowrates are quantified as follows:

1 lot = 250 gpm
18 lots = 500 gpm
7 lots = 750 gpm
3 lots = 1000 gpm
Average demand = 600 gpm

Based on Riverland's existing pipe infrastructure, a reasonable improvement plan can be developed in order to provide 500 gpm distributed throughout the subdivision. Based on the numbers above, most lots in the subdivision are assigned a demand of 500 gpm. An economically achievable solution rests at

500 gpm. Considering that the existing water distribution capability throughout the Riverland subdivision is currently 0 gpm, achieving 500 gpm is a vast improvement, one that is beneficial to all parties involved.

Section 4.1.4, NFPA 1142 states " The AHJ shall be permitted to specify how the water supplies required in this document are provided, giving consideration to local conditions and need.". CBFPD could likely provide addition gallons per minute using water tender trucks in the event more than 500 gpm is needed for firefighting efforts.

In order to comply with the recommendations of NFPA 1142, and thus, meet the intent for Alternative Water Supply as allowed by Section 303, CBFPD standards, the following design criteria is proposed:

1. A minimum of 35,000 gallons of fire protection water storage in the Riverland subdivision
2. Distribution of the water at 500 gpm
3. Distribution system is pressurized at a minimum of 20 psi
4. A minimum of 3 fire hydrants are installed spaced to provide water distribution throughout the subdivision. Placement is subject to review by CBFPB.

The above design criteria may be achieved in a variety of ways. Suggested improvements include upsizing the existing water pump, expanding the existing water tank, upsizing any existing 2" lines to 4" or 6". Details of the design to achieve this long term solution will be developed by Riverland and presented for approval to Gunnison County and Crested Butte Fire Protection District.

Note that the proposed improvements would also greatly enhance the domestic water distribution in the park.

Future Development

The overall direction of the Riverland Industrial Park infrastructure should consider potential for development on adjacent parcels of land, specifically to the North. Adjacent development could facilitate extension of the Crested Butte municipal water supply into the Riverland Park. Should that opportunity present itself, Riverland infrastructure should be improved to a point in which the complex could receive this water. This would likely require a minimum 8" line to be run through the complex. The path of the existing water distribution is a good one. Recommendations for long term future improvement would be to replace and upsize the existing 2", 4" and 6" lines to 8" lines as opportunities arise.

Statement of Solution

In summary, this report offers a recommended approach to facilitate reinstatement of the issuance of building permits for the Riverland subdivision. Implementation consists of both a short term solution, to be completed prior to allowing the issuance of building permits and a long term solution, to be incorporated into a development agreement between Riverland and the Crested Butte Fire Protection District. Successful completion of these solutions will achieve compliance with the CBFPD standards and provide an effective level of life safety for the occupants of the subdivision.

If the Riverland HOA opts for immediate implementation of the long term solution as described in this report, the short term solution may be omitted from the improvement plan. The short term solution is

not mandatory if the long term solution is implemented and was crafted simply to provide an interim alternative while funding for the long term solution was determined. The short term solution was offered as a bargaining tool to allow for construction to continue while the long term solution was in development. Achievement of the long term solution would bring Riverland into compliance with current codes and standards related to central water supply.

Appendix #1: Riverland Industrial Park Lot Overview

Lot #	Address	Business Name/Description	Building Use	Size	Building Material	Approx Height (ft)	Volume (cu ft)	Occup Class #	Const Class #	Water Volume (gallons)	Flow Rate (gpm)
1	337 Buckley Drive	Premier Painting	Paint Shop	2500	Metal	15	37500	4	0.5	4688	500
2,3	305 Buckley	Residential Unit	Residential	1512	Metal	10	40320	5	0.5	4032	500
		Rocky Mountain Trees	Workshop	2520	Metal						
4		Undeveloped									
5	337 Buckley Drive, Unit 1		Workshop	1164	Metal/Stucco	10	92690	5	0.5	9269	500
	337 Buckley Drive, Unit 2		Workshop	1135	Metal/Stucco						
	337 Buckley Drive, Unit 3	Spellbound Furniture	Workshop	1130	Metal/Stucco						
	337 Buckley Drive, Unit 4	Peak Property Management	Workshop	1145	Metal/Stucco						
	337 Buckley Drive, Unit 5	Residential Unit	Residential	1145	Metal/Stucco						
	337 Buckley Drive, Unit 6		Workshop	1200	Metal/Stucco						
	337 Buckley Drive, Unit 7		Workshop	1200	Metal/Stucco						
	337 Buckley Drive, Unit 8		Workshop	1150	Metal/Stucco						
6	244/246 Buckley	Residential Unit	Residential	1000	Metal/Stucco	10	166740	4	0.5	20843	1000
		Altitude Auto	Workshop	6200	Metal						
		Buckley Valley Storage	Mini Storage	9474	Metal						
7	296 Buckley	Residential Unit	Residential	1600	Metal	10	64500	5	0.5	6450	500

Lot #	Address	Business Name/Description	Building Use	Size	Building Material	Approx Height (ft)	Volume (cu ft)	Occup Class #	Const Class #	Water Volume (gallons)	Flow Rate (gpm)
			Workshop	2450	Metal						
			Storage	2400	Metal						
8	396 Riverland	Colorado Paint Supply	Tire Storage/ Paint Supply	6200	Metal	18	111600	3	0.5	18600	750
9	398 Riverland	Residential Unit	Residential	1480	Wood	12	157440	3	0.5	26240	1000
			Paint Shop	1800	Metal						
		JCI	Workshop	9840	Metal						
10,11	444 Riverland		Warehouse	9510	Metal	10	196350	5	0.5	19635	750
			Mini Storage	10125	Metal						
12	467 Riverland	Waste Management	Warehouse	8200	Metal	30	267000	4	0.5	33375	1000
			Office	700	Metal						
13	336/366 Buckley	Residential Unit	Residential	1930	Stucco	10	48600	5	0.5	4860	500
		CB Ironworks	Workshop	1000	Metal						
		Oh Be Dogful	Kennels	1930	Stucco						
14	357 Riverland	Gears Inc	Office/Workshop	4823	Metal	10	48230	7	0.5	3445	500
15	455 Riverland, Unit #1	Parker Dirtworks	Garage	2286	Wood	18	69948	6	1.5	17487	750
	455 Riverland, Unit #2	Residential Unit	Residential	1600	Wood						
16	469 Riverland	Undeveloped									

Lot #	Address	Business Name/Description	Building Use	Size	Building Material	Approx Height (ft)	Volume (cu ft)	Occup Class #	Const Class #	Water Volume (gallons)	Flow Rate (gpm)
17	475 Riverland	Residential Unit	Residential	2240	Concrete/Wood	15	81585	7	1	11655	750
		Concrete Shop	Workshop	3199	Concrete/Wood						
18,19	497 Riverland	Undeveloped									
20	515 Riverland, Units 201/202/203	Blind Faith, etc.	Office/Workshop	3500	Metal w/Wood Framing	10	35000	7	1	5000	500
21	523 Riverland	Various	Office/Workshop	4000	Metal w/Wood Framing	10	40000	7	1	5714	500
22	539 Riverland		Workshop	3072	Wood	10	30720	7	1.5	6583	500
23	571 Riverland	CB Rental Center		3500	Metal w/Wood Framing	10	35000	7	1	5000	500
24		Crested Butte RV Resort	RV Sites								
25		Crested Butte RV Resort	Office								
26	733 Riverland	Residential Unit	Residential	1512	Metal	10	43920	7	0.5	3137	500
			Workshop	2880	Metal						
27	744 Riverland	European Auto Interests	Auto Storage	8000	Metal	12	96000	6	0.5	8000	750
28	738 Riverland	Colorado Barnwood	Office	963	Metal	12	50556	6	0.5	4213	500
		Auto Storage	Garage	3250	Metal						
29	736 Riverland	Residential Unit	Residential	1500	Stucco	12	62640	5	0.5	6264	500
		Beckwith Brickworks	Workshop	3720	Stucco						
30	110 Andreas Circle	Wheatstone/Paradise Computer		2500	Metal	12	30000	5	0.5	3000	500

Lot #	Address	Business Name/Description	Building Use	Size	Building Material	Approx Height (ft)	Volume (cu ft)	Occup Class #	Const Class #	Water Volume (gallons)	Flow Rate (gpm)
31	122 Andreas Circle	Crawfords		2500	Metal	15	37500	5	0.5	3750	500
32	2 Andreas Circle	Timberline/Zimmerman		6500	Metal	15	97500	5	0.5	9750	500
33	Andreas Circle, Unit 622		Garage	552	Metal	12	50160	4	0.5	6270	500
	Andreas Circle, Unit 624		Garage	552	Metal						
	Andreas Circle, Unit 626		Garage	552	Metal						
	Andreas Circle, Unit 628		Garage	552	Metal						
	Andreas Circle, Unit 630A	Residential Unit	Residential	986	Metal						
	Andreas Circle, Unit 630B	Residential Unit	Residential	986	Metal						
34	544 Riverland	Thurston Kitchen & Bath	Workshop	2370	Stucco	12	28440	7	0.5	2031	250
35	510 Riverland	Alpine Express	Auto Storage	8000	Metal	20	160000	6	0.5	13333	750
36	496 Riverland	Undeveloped									
37	482 Riverland	CB Motorsports		9308	Metal	15	139620	6	0.5	11635	750
38	470 Riverland	Omnicom Public Storage	Storage	6000	Metal	12	72000	5	0.5	7200	500

Appendix #2: NFPA 1142 Analysis

Crested Butte Fire Protection District Standards, Section 402 allows for Alternative Water Supplies developed in accordance with NFPA 1142 Standards. To determine the proper design criteria for Riverland Industrial Park's alternative water supply, the following analysis and calculation is presented.

NFPA 1142, *Standard for Water Supplies for Suburban and Rural Fire Fighting* provides a method for calculating the minimum water supply required for a rural facility. The standards states that on a multiple building site, only the most restrictive building's water supply as calculated is required. In other words, the water supply is not sized assuming all buildings are in a fire condition. Rather, it is sized assuming the most demanding building is in a fire condition. Based on site observations, the Waste Management Building on Lot 12 is the most demanding.

The Waste Management building is approximately 8,900 square feet with an average building height of 30'.

NFPA 1142's formula for determining minimum recommended water supply is as follows:

> Minimum Water Supply = (Total Volume of Structure)/(Occupancy Hazard Classification Number) x Construction Classification Number

The Occupancy Classification numbers are assigned by Section 5.2 NFPA 1142 and are based on the specific use of the building. The Waste Management building has been assigned an Occupancy Classification of 4 which includes General Storage and Warehouses.

The Construction Classification number is assigned by Section 6.2 and is based on the materials of building construction. Because this building is metal and of non-combustible construction, a Construction Classification of Type I is assigned, which carries a .5 Classification Number.

> Occupancy Hazard Classification Number = 4
> Construction Classification Number = .5
> Approximate Building Volume = 267,000 cubic feet
>
> **Minimum Water Supply** = 267,000 cu.ft./4 x .5 = **33,375 gallons**

RIVERLAND INDUSTRIAL PARK SITE PLAN

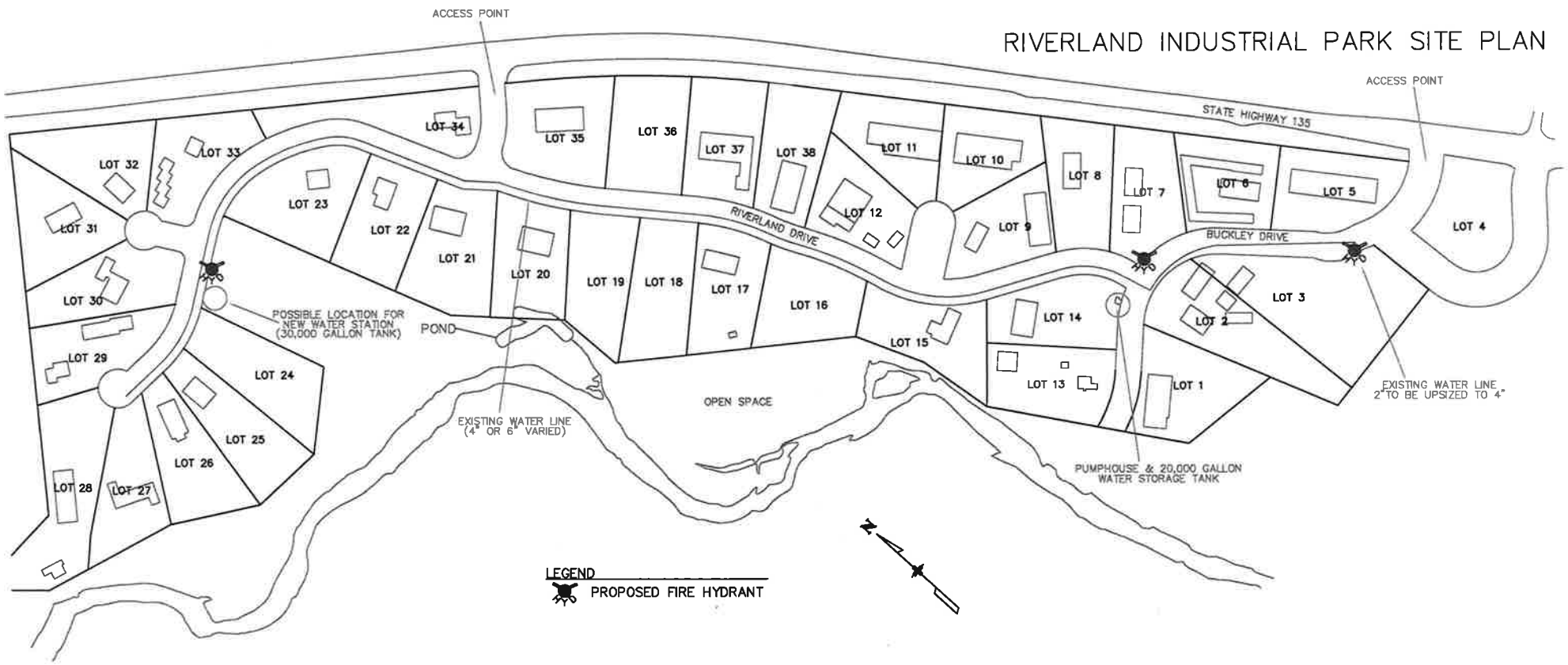

RIVERLAND INDUSTRIAL PARK
FIRE PROTECTION IMPROVEMENTS

Prepared By:
Norman Whitehead, P.E.-P.L.S.
NCW & Associates, Inc.
Crested Butte, Colorado

November 10, 2014

The proposed project will improve fire fighting water supply and supply access from a 30,000 gallon domestic water tank with an attached dry hydrant to 35,000 gallons of dedicated fire storage and six fire hydrants located along Riverland Drive. Using the existing 4 inch water main, the six fire hydrants will be placed no more than 500 feet apart.

Existing System

The existing system that provides fire fighting water consists of a dry hydrant attached to a 30,000 gallon tank that is also used for domestic water supply storage. The existing tank and dry hydrant are located west of the intersection of Riverland Drive and Buckley Drive. At this point, an undetermined amount of water is available for fire fighting due to the domestic water uses and the capacity of the existing well to fill the tank.

The existing water distribution system consists of 2 and 4 inch water mains pressurized by a 10 horsepower pump (pump curve provided in the Appendix). The 4 inch main runs along Riverland Dr. from the intersection of Riverland Dr. and Buckley Dr. to a point near Lot 25. The 2 inch mains run from the northerly end of the 4 inch main to the end of Riverland Dr and from the southerly end of the 4 inch main along Buckley Dr. to the northwesterly corner of Lot 4. There is a 2 inch hydrant located at the end of the 2 inch line at the northwest corner of lot 4.

I appears that the 4 inch main consists of Class 200 PVC (200psi working pressure) from the existing pump house to approximately the middle of Lot 15 and the remaining 4 inch main is indicated to be ductile iron (300 psi working pressure).

The pumps located in the existing pump house are approximately 14.5 feet above the bottom of the existing 30,000 gallon tank. As a result, the Net Positive Suction Head (NPSH) is reduced to a point that limits the capacity of the pumps. The existing tank has a foot valve wuth its intake approximately 1.0 feet above the bottom of the tank. It is assume that the water level will need to be 1.0' above the foot valve to prevent air from being pulled into the system. It is estimated that the existing 10 hp pump can provide approximate 190 gpm when the tank level is at 2.0 feet. The 2.0 foot level is used as the base point for the fire flow calculations. The 2.0 feet will be added to the minimum fire volume depth to obtain the domestic storage. As an example, if the required fire flow storage depth is 3.5', then the domestic pump(s) will be shut off at a tank level of 2.0 + 3.5 = 5.5 feet.

At this point in time, businesses and residential units do not have pressure reducing valves. To prevent damage to the water services and fixtures, the system pressures are kept around 110 psi.

Proposed System Improvements

1. Water Storage - A 40,000 gallon tank is proposed to be located adjacent to Riverland Dr. just east of Lot 24. Due to the limited capacity of the existing 4 inch main, both tanks will need to provide fire fighting storage capacity. This will be accomplished by determining the fire flows that the exiting distribution system can reasonably provide, determining the flow from each tank and reserving the volume in each tank that will total a minimum of 35,000 gallons. The proposed system controls will turn off domestic water pumps at each tank when the water

levels reach the minimum fire storage levels. When there is a fire demand, a switch located at each pump house will enable the fire flow pumps to use the reserve water supply and raise the allowable system pressure to 120 psi.

2. Fire Flow Pumps – Two fire flow pumps will be provided at the new tank location (pump curves are provided in the Appendix). During fire fighting, the existing 10 horsepower pump and the 2 new pumps will provide fire flow at a rate that will balance the flow from each tank, thus making the fire storage more predictable.

   At this point in time, the fire flow pumps will run once they are enabled until they are disabled manually or by a low tank level shut-off control.

   Manual overrides will be provided at each pump house so that the system can be run in case of controller failure.

   The proposed 15 hp pumps will provide a churning pressure of 168 psi. Caution will need to be taken when shutting down fire fighting equipment. The pumps will be provided with variable speed drives but the reaction time may not be quick enough to prevent the system from over pressurizing.

   The static head for the Berkeley 6T 225 pumps id 113psi for the 10 hp, 168 psi for the 15 hp and 223 psi for the 20hp. The system should be kept below 90 psi until such time the all of the services are equipped with a pressure reducing valve or can demonstrate that they can handle 168 psi. It should be noted that some system components may not be able to withstand the higher pressures of the proposed improvements.

3. Domestic Flow Pumps- These pumps will provide domestic water from storage that is in excess of the minimum fire storage. The system pressure at the new pump house will be set around 70 psi.

4. Fire Hydrants- Fire hydrants will be located along the 4 inch main at a maximum spacing of 500 feet.

5. Sprinkler Systems- Flow detectors and a form of communication compatible with the system controls may need to be provided to trigger the fire flow pumps and reserves. If the demand is high enough, the fire system will be triggered by system low pressure.

6. System Controls- The controls will provide the following:

   - Activate fire flow pumps
   - Maintain minimum fire storage volumes
   - Fire flow control
   - Tank fill
   - System working pressures
   - Low tank level shut-off
   - Well control

- Communication between tanks to provide fire flow activation, tank levels and pump flows.

A systems control worksheet is provided in the Appendix. This sheet is the base for control programming. After system start-up and tuning, a copy of the settings will be provided and kept in the new pump house.

Attachments

1. Site Map- This map shows Riverland Industrial Park, the location of the existing water tank, pump house and dry hydrant and the proposed tank, pump house and fire hydrant locations.

2. Proposed Water Tank- This shows the layout of the proposed tank and pump house.

3. System Capacity Calculation- This shows the system pressure losses, pressure require at each pump house with a residual pressure of 20 psi in the system and the fire demand at each fire hydrant.

4. Pump Curves- These show the capacities of the existing and proposed pumps as they relate to system pressures.

5. Control Worksheet- This shows the base control requirements for the system controls.

6. A print out of the EPAnet program at fire hydrants 1 and 6. This is used to check the results of the system capacity calculation sheet.

7. A print out of EPAnet that shows the fire flow supply through a 4.5 inch hose at Lot 4.

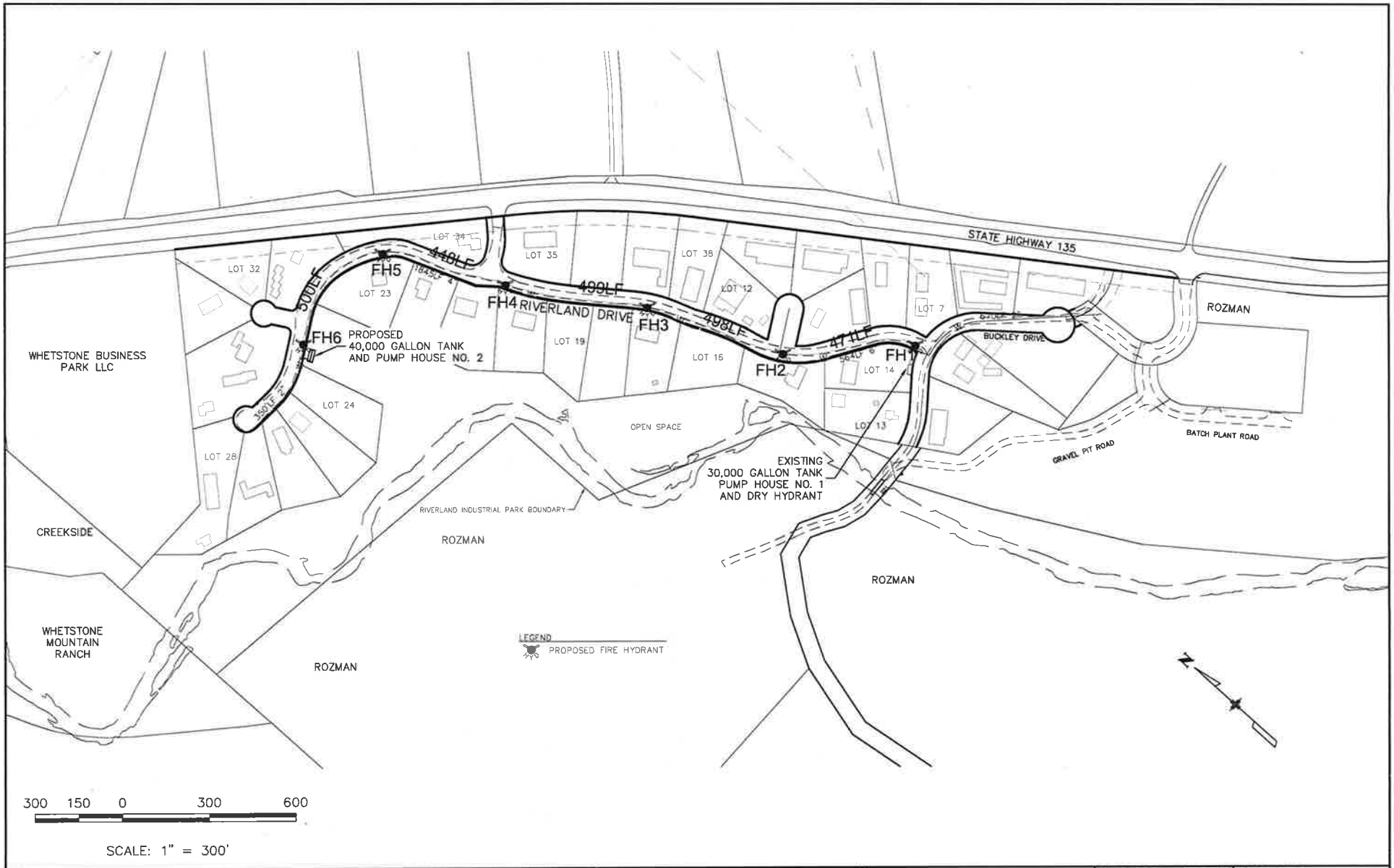

Prepared By: NCW & Associates, Inc.	P.O. Box 3688 (970) 349-6384	Crested Butte Colorado 81224		RIVERLAND FIRE SUPPLY	HYDRANT LOCATION	PROJECT: 12114.00 DATE: 10/7/14	DWG.: FIRE SHEET 1 OF 1

Riverland Fire Flows

System Fire Flow at 558 gpm

9-Nov-14

	Pump		hp	Speed rpm	Static Pressure	
Existing	1 Berkeley	B2ZPLS	10	3450	91	psi
New	4 Berkeley	6T 225	15	3450	168	psi

Pump To Tank Bottom -14.5 ft

# of Pumps Tank 1 1

# of Pumps Tank 2 2

Tank Volume Ratios	Area sf	Volune/ft gal	Fire Storage ft
Tank No. 1	411.84	3081	3.84
Tank No. 2	730.33	5463	4.27
Ratio			0.901
Tank No 1. Water Level			2.0
Tank No. 1 Fire Storage Depth			5.8
Tank No. 1 Storage below Fire Storage			6161.1

Tank No. 1 level drops 0.901 faster than Tank No. 2

Storage 35,000 gal

Minimum 20 PSI 46.2 FT

Demand Pump House No. 1 188 gpm Allowable 188 gpm

System Demand 558

Storage Time 63.0 min.

Lower Tank	Upper Tank	Fire Total	Storage Total	Domestic
11,844	23,310	35,154	76049	34,734

Length ft	Flow gpm	C	Diameter in	Pipe Loss ft	Elev. Dif. ft	System Total Head ft	Pump head ft	Pump		Dif. In Head ft	use after 63min gal	Flow Time min	Remaining Time min	Volume gal	Pump Speed rpm
Pump House Number 1 (existing)					8844										
	188	130	4	1							11844				
	188			1	2	49	49	1	OK	0		63			1968
45							(21psi)								57%
hydrant 1	558				8846										
	370	130		40							23310	63			
	185			205	20	271	271	4	OK	0					3445
							(118psi)								100%
471			4								35154		0 min	@ 370gpm	
	188	130		11							11844				
	188			12	8	67	67	1	OK	0		63			2289
							(29psi)								66%
hydrant 2	558				8852										
	370	130		42							23310	63			
	185			165	26	237	237	4	OK	0					3223
							(103psi)								93%
498			4								35154				
	188	130		12							11844	63			
	188			25	12	83	83	1	OK	0					2550
							(36psi)								74%
hydrant 3	558				8856										
	370	130		42							23310	63			
	185			123	30	199	199	4	OK	0					2952
							(86psi)								86%
499			4								35154				
	188	130		12							11844	63			
	188			37	16	99	99	1	OK	0					2787
							(43psi)								81%
hydrant 4	558				8860										
	370	130		38							23310	63			
	185			81	34	161	161	4	OK	0					2653
							(70psi)								77%
448			4								35154				
	188	130		11							11844	63			
	188			47	8	102	102	1	OK	0					2827
							(44psi)								82%
hydrant 5	558				8852										
	370	130		42							23310	63			
	185			43	26	115.	115	4	OK	0					2242
							(50psi)								65%
500			4								35154		0 min	@ 188gpm	
	188	130		12							11844	63			
	188			60	-15	91	91	1	OK	0					2671
							(39psi)								77%
hydrant 6	558				8829										
	370	130		0							23310	63		0	
	185			0	3	50	50	4	OK	0	35154				1472
30			6				(21psi)								43%
Pump House No. 2					8826										

This worksheet has the existing 10 hp pump in pump house no. 1 is running at 188gpm.

Pump No. 1 will cavitate at tank level around 2' (full Tank = 10.0')

2000

19390

Riverland Fire Flows 9-Nov-14

System Fire Flow at 483 gpm

	Pump		hp	Speed rpm	Static Pressure	
Existing	1 Berkeley	B2ZPLS	10	3450	91	psi
New	3 Berkeley	6T 225	10	3450	113	psi

Pump To Tank Bottom -14.5 ft

# of Pumps Tank 1 1

# of Pumps Tank 2 2

Tank Volume Ratios	Area sf	Volume/ft gal	Fire Storage ft
Tank No. 1	411.84	3081	4.46
Tank No. 2	730.33	5463	3.94
Ratio			1.130
Tank No 1. Water Level			2.0
Tank No. 1 Fire Storage Depth			6.5
Tank No. 1 Storage below Fire Storage			6161.1

Tank No. 1 level drops 1.13 faster than Tank No. 2

Storage 35,000 gal

Minimum 20 PSI 46.2 FT

Demand Pump House No. 1 188 gpm Allowable 188 gpm

System Demand 483

Storage Time 73.0 min.

Lower Tank	Upper Tank	Fire Total	Storage Total	Domestic
13,724	21,535	35,259	76049	34,629

Length ft	Flow gpm	C	Diameter in	Pipe Loss ft	Elev. Dif. ft	System Total Head ft	Pump head ft	Pump		Dif. In Head ft	use after 73min gal	Flow Time min	Remaining Time min	Volume gal	Pump Speed rpm
Pump House Number 1 (existing)					8844										
	188	130	4	1							13724				
	188			1	2	49	49	1	OK	0		73			1968
45							(21psi)								57%
hydrant 1	483				8846										
	295	130		26							21535	73			
	148			135	20	201	201	3	OK	0					3446
							(87psi)								100%
471			4								35259		0 min	@ 295gpm	
	188	130		11							13724				
	188			12	8	67	67	1	OK	0		73			2289
							(29psi)								66%
hydrant 2	483				8852										
	295	130		28							21535	73			
	148			109	26	181	181	3	OK	0					3268
							(78psi)								95%
498			4								35259				
	188	130		12							13724	73			
	188			25	12	83	83	1	OK	0					2550
							(36psi)								74%
hydrant 3	483				8856										
	295	130		28							21535	73			
	148			81	30	157	157	3	OK	0					3046
							(68psi)								88%
499			4								35259				
	188	130		12							13724	73			
	188			37	16	99	99	1	OK	0					2787
							(43psi)								81%
hydrant 4	483				8860										
	295	130		25							21535	73			
	148			53	34	133	133	3	OK	0					2805
							(58psi)								81%
448			4								35259				
	188	130		11							13724	73			
	188			47	8	102	102	1	OK	0					2827
							(44psi)								82%
hydrant 5	483				8852										
	295	130		28							21535	73			
	148			28	26	100	100	3	OK	0					2434
							(43psi)								71%
500			4								35259		0 min	@ 188gpm	
	188	130		12							13724	73			
	188			60	-15	91	91	1	OK	0					2671
							(39psi)								77%
hydrant 6	483				8829										
	295	130		0							21535	73		0	
	148			0	3	49	49	3	OK	0	35259				1708
30			6				(21psi)								50%
Pump House No. 2					8826										

This worksheet has the existing 10 hp pump in pump house no. 1 is running at 188gpm. 2000

Pump No. 1 will cavitate at tank level around 2' (full Tank = 10.0') 15226

Riverland Fire Flows

System Fire Flow at 607 gpm

9-Nov-14

	Pump			hp	Speed rpm	Static Pressure	
Existing	1	Berkeley	B2ZPLS	10	3450	91	psi
New	5	Berkeley	6T 225	20	3450	223	psi

Pump To Tank Bottom -14.5 ft

# of Pumps Tank 1 1

# of Pumps Tank 2 2

Tank Volume Ratios	Area sf	Volune/ft gal	Fire Storage ft
Tank No. 1	411.84	3081	3.54
Tank No. 2	730.33	5463	4.45
Ratio			0.796
Tank No 1. Water Level			2.0
Tank No. 1 Fire Storage Depth			5.5
Tank No. 1 Storage below Fire Storage			6161.1

Tank No. 1 level drops 0.796 faster than Tank No. 2

Storage 35,000 gal

Minimum 20 PSI 46.2 FT

Demand Pump House No. 1 188 gpm Allowable 188 gpm

System Demand 607

Storage Time 58.0 min.

Lower Tank	Upper Tank	Fire Total	Storage Total	Domestic
10,904	24,302	35,206	76049	34,682

Length ft	Flow gpm	C	Diameter in	Pipe Loss ft	Elev. Dif. ft	System Total Head ft	Pump head ft	Pump		Dif. In Head ft	use after 58min gal	Flow Time min	Remaining Time min	Volume gal	Pump Speed rpm
Pump House Number 1 (existing)					8844										
	188	130	4	1							10904				
	188			1	2	49	49	1	OK	0		58			1968
45							(21psi)								57%
hydrant 1	607				8846										
	419	130		50							24302	58			
	210			258	20	325	325	5	OK	0					3444
							(141psi)								100%
471			4								35206		0 min	@ 419gpm	
	188	130		11							10904				
	188			12	8	67	67	1	OK	0		58			2289
							(29psi)								66%
hydrant 2	607				8852										
	419	130		53							24302	58			
	210			208	26	280	280	5	OK	0					3201
							(121psi)								93%
498			4								35206				
	188	130		12							10904	58			
	188			25	12	83	83	1	OK	0					2550
							(36psi)								74%
hydrant 3	607				8856										
	419	130		53							24302	58			
	210			155	30	231	231	5	OK	0					2906
							(100psi)								84%
499			4								35206				
	188	130		12							10904	58			
	188			37	16	99	99	1	OK	0					2787
							(43psi)								81%
hydrant 4	607				8860										
	419	130		48							24302	58			
	210			102	34	182	182	5	OK	0					2578
							(79psi)								75%
448			4								35206				
	188	130		11							10904	58			
	188			47	8	102	102	1	OK	0					2827
							(44psi)								82%
hydrant 5	607				8852										
	419	130		53							24302	58			
	210			54	26	126	126	5	OK	0					2146
							(55psi)								62%
500			4								35206		0 min	@ 188gpm	
	188	130		12							10904	58			
	188			60	-15	91	91	1	OK	0					2671
							(39psi)								77%
hydrant 6	607				8829										
	419	130		0							24302	58		0	
	210			0	3	50	50	5	OK	0	35206				1346
30			6				(21psi)								39%
Pump House No. 2					8826										

This worksheet has the existing 10 hp pump in pump house no. 1 is running at 188gpm.

Pump No. 1 will cavitate at tank level around 2' (full Tank = 10.0')

2000

22768

BERKELEY® 6T-225
Submersible Turbine

Nominal RPM: 3450
Based on Fresh Water @ 68 F.
Maximum Working Pressure: 580 PSI

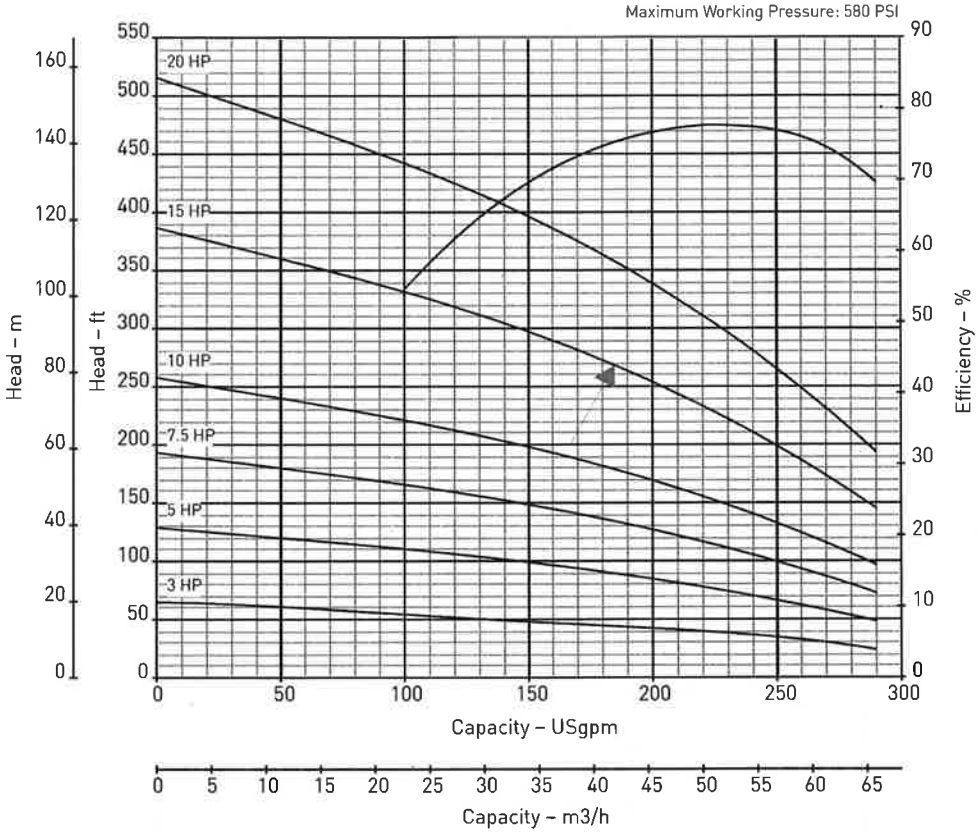

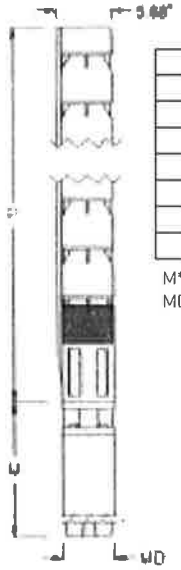

Outline Dimensions / Weights

HP	Stages	Motor Size	P Length	M* Length	MD* Diameter	Motor Weight	Pump Weight
3	1	4"	15.61	23.62	3.75	53	54
5	2	6"	23.98	27.00	5.51	95	75
7.5	3	6"	28.98	27.60	5.51	114	94
10	4	6"	33.98	29.80	5.51	127	114
15	6	6"	43.98	30.40	5.51	130	152
20	8	6"	53.98	35.50	5.51	160	191
Note: Dimensions=Inches; Weight=U.S. Lbs.							

M*-Maximum Length (Pentair Motor)
MD*-Motor Diameter (Pentair Motor)

Specifications

Minimum Well I.D.	6.0 Inches
Minimum Submergence @ BEP (above inlet)	10.0 Feet
Capacity Range	100 - 300 GPM
Discharge	4" F NPT
See manufacturer's data for motor cooling requirements	

PENTAIR

Pump Size: 2 x 2-1/2 x 9 L

Model: B2Z_L

Curve No. 8553

Type	CCMD	FM CPLG	FM BELT	SAE	Hydraulic	AC Engine
Model	B2ZPL	B2ZRL				B2ZQLS-18 (7.88" Diameter Impeller)

Nominal RPM: **3500**
Based on Fresh Water @ 68°F (20°C)
Maximum Working Pressure: 250 PSI (17 BAR)

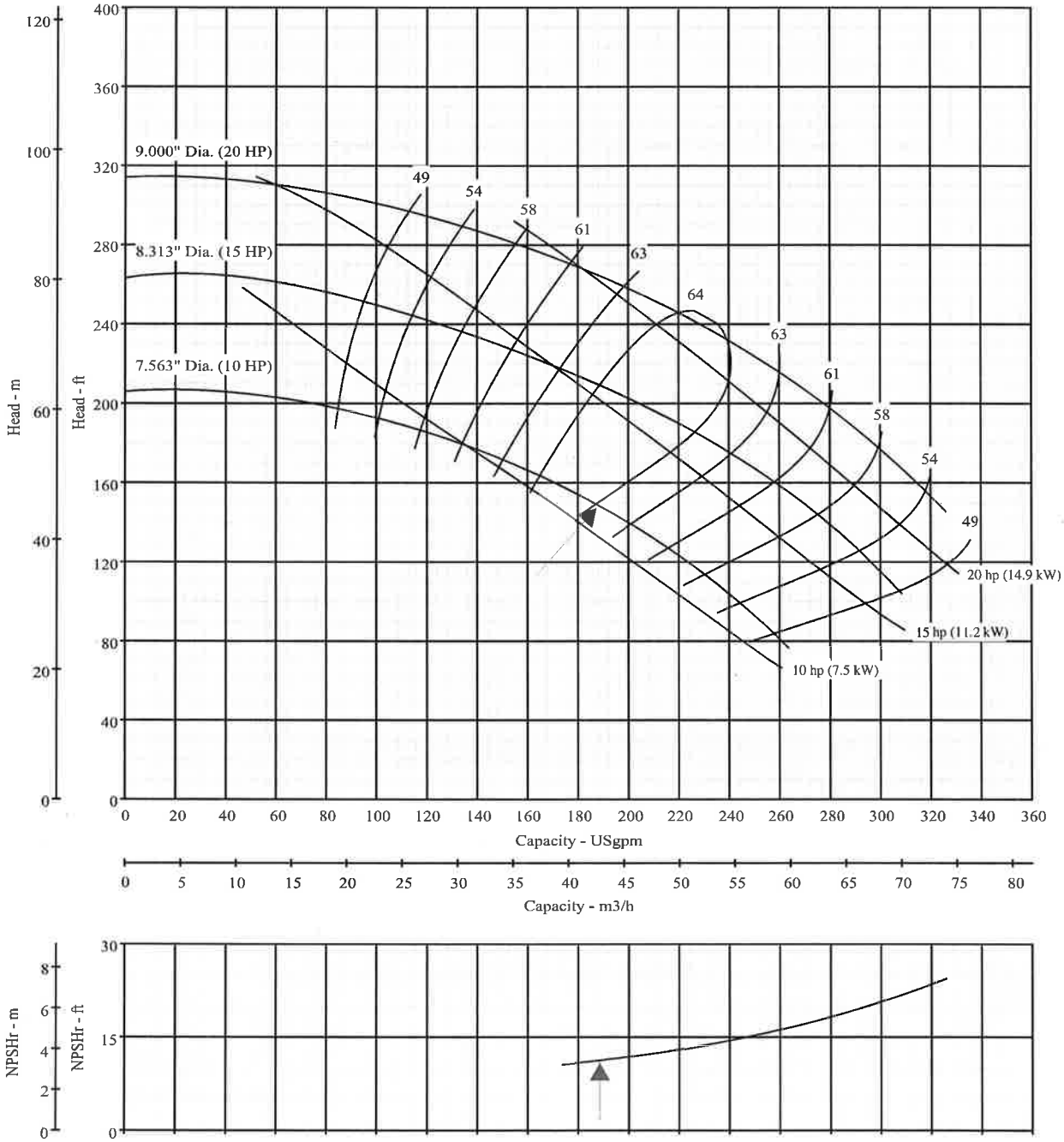

Riverland- 558 gpm @ Fire Hydrant No. 1


```
**********************************************************************
*                              E P A N E T                           *
*                     Hydraulic and Water Quality                    *
*                     Analysis for Pipe Networks                     *
*                            Version 2.0                             *
**********************************************************************
```

Input File: fire4inch4pumps.net

Link - Node Table:

Link ID	Start Node	End Node	Length ft	Diameter in	
20	4	20	662.56	2	
6	4	6	492.70	4	
8	6	8	496.62	4	
10	10	8	489.19	4	
14	12	14	501.26	4	
18	16	18	284.00	2	
4	2	4	37.44	4	
12	10	12	452.75	4	
9	1	4	44.03	4	
16	16	14	30.49	6	
50	4	50	670.81	4	
101	1	2	#N/A	#N/A	Pump
202	3	16	#N/A	#N/A	Pump
102	1	2	#N/A	#N/A	Pump
203	3	16	#N/A	#N/A	Pump
201	3	16	#N/A	#N/A	Pump

Energy Usage:

Pump	Usage Factor	Avg. Effic.	Kw-hr /Mgal	Avg. Kw	Peak Kw	Cost /day
101	100.00	75.00	174.05	1.88	1.88	0.00
202	100.00	75.00	1121.13	12.65	12.65	0.00
102	0.00	0.00	0.00	0.00	0.00	0.00
203	100.00	75.00	1121.13	12.65	12.65	0.00
201	0.00	0.00	0.00	0.00	0.00	0.00

Demand Charge: 0.00
Total Cost: 0.00

Node Results:

Node ID	Demand GPM	Head ft	Pressure psi	Quality	
4	556.00	8894.72	21.11	0.00	
20	0.00	8894.72	16.34	0.00	
6	0.00	8937.77	37.60	0.00	
8	0.00	8981.17	55.10	0.00	
10	0.00	9023.91	71.02	0.00	
12	0.00	9063.47	91.63	0.00	
16	0.00	9107.65	121.17	0.00	
18	0.00	9107.65	119.87	0.00	
2	0.00	8895.55	23.20	0.00	
14	0.00	9107.28	119.71	0.00	
50	0.00	8894.72	16.34	0.00	
1	-179.91	8854.00	4.33	0.00	Tank
3	-376.11	8840.00	4.33	0.00	Tank

Link Results:

Link ID	Flow GPM	Velocity fps	Unit Headloss ft/Kft	Status	
20	0.00	0.00	0.00	Open	
6	-376.10	9.60	87.38	Open	
8	-376.10	9.60	87.38	Open	
10	376.10	9.60	87.38	Open	
14	-376.10	9.60	87.38	Open	
18	0.01	0.00	0.00	Open	
4	179.91	4.59	22.30	Open	
12	-376.10	9.60	87.38	Open	
9	0.00	0.00	0.00	Closed	
16	376.10	4.27	12.14	Open	
50	0.00	0.00	0.00	Open	
101	179.91	0.00	-41.55	Open	Pump
202	188.05	0.00	-267.65	Open	Pump
102	0.00	0.00	0.00	Closed	Pump
203	188.05	0.00	-267.65	Open	Pump
201	0.00	0.00	0.00	Closed	Pump

Riverland, 558 gpm @ Fire Hydrant No.6


```
**********************************************************************
*                          E P A N E T                               *
*                  Hydraulic and Water Quality                       *
*                  Analysis for Pipe Networks                        *
*                         Version 2.0                                *
**********************************************************************
```

Input File: fire4inch4pumps.net

Link - Node Table:

Link ID	Start Node	End Node	Length ft	Diameter in	
20	4	20	662.56	2	
6	4	6	492.70	4	
8	6	8	496.62	4	
10	10	8	489.19	4	
14	12	14	501.26	4	
18	16	18	284.00	2	
4	2	4	37.44	4	
12	10	12	452.75	4	
9	1	4	44.03	4	
16	16	14	30.49	6	
50	4	50	670.81	4	
101	1	2	#N/A	#N/A	Pump
202	3	16	#N/A	#N/A	Pump
102	1	2	#N/A	#N/A	Pump
203	3	16	#N/A	#N/A	Pump
201	3	16	#N/A	#N/A	Pump

Energy Usage:

Pump	Usage Factor	Avg. Effic.	Kw-hr /Mgal	Avg. Kw	Peak Kw	Cost /day
101	100.00	75.00	350.25	3.93	3.93	0.00
202	100.00	75.00	162.12	1.80	1.80	0.00
102	0.00	0.00	0.00	0.00	0.00	0.00
203	100.00	75.00	162.12	1.80	1.80	0.00
201	0.00	0.00	0.00	0.00	0.00	0.00

Demand Charge: 0.00
Total Cost: 0.00

Node Results:

Node ID	Demand GPM	Head ft	Pressure psi	Quality	
4	0.00	8936.72	39.31	0.00	
20	0.00	8936.72	34.54	0.00	
6	0.00	8924.89	32.02	0.00	
8	0.00	8912.97	25.55	0.00	
10	0.00	8901.24	17.87	0.00	
12	0.00	8890.37	16.63	0.00	
16	0.00	8878.70	21.97	0.00	
18	0.00	8878.70	20.67	0.00	
2	0.00	8937.61	41.43	0.00	
14	558.00	8878.34	20.51	0.00	
50	0.00	8936.72	34.54	0.00	
1	-187.19	8854.00	4.33	0.00	Tank
3	-370.82	8840.00	4.33	0.00	Tank

Link Results:

Link ID	Flow GPM	Velocity fps	Unit Headloss ft/Kft	Status	
20	0.00	0.00	0.00	Open	
6	187.17	4.78	24.00	Open	
8	187.17	4.78	24.00	Open	
10	-187.17	4.78	24.00	Open	
14	187.17	4.78	24.00	Open	
18	0.00	0.00	0.00	Open	
4	187.19	4.78	24.00	Open	
12	187.17	4.78	24.00	Open	
9	0.00	0.00	0.00	Closed	
16	370.83	4.21	11.79	Open	
50	0.00	0.00	0.00	Open	
101	187.19	0.00	-83.61	Open	Pump
202	185.41	0.00	-38.70	Open	Pump
102	0.00	0.00	0.00	Closed	Pump
203	185.41	0.00	-38.70	Open	Pump
201	0.00	0.00	0.00	Closed	Pump

Riverland, 535 gpm @ Lot 4, 4.5" Hose


```
**********************************************************************
*                          E P A N E T                               *
*                  Hydraulic and Water Quality                       *
*                  Analysis for Pipe Networks                        *
*                         Version 2.0                                *
**********************************************************************
```

Input File: fire4inch4pumps.net

Link - Node Table:

Link ID	Start Node	End Node	Length ft	Diameter in	
20	4	20	662.56	2	
6	4	6	492.70	4	
8	6	8	496.62	4	
10	10	8	489.19	4	
14	12	14	501.26	4	
18	16	18	284.00	2	
4	2	4	37.44	4	
12	10	12	452.75	4	
9	1	4	44.03	4	
16	16	14	30.49	6	
50	4	50	670.81	4.5	
101	1	2	#N/A	#N/A	Pump
202	3	16	#N/A	#N/A	Pump
102	1	2	#N/A	#N/A	Pump
203	3	16	#N/A	#N/A	Pump
201	3	16	#N/A	#N/A	Pump

Energy Usage:

Pump	Usage Factor	Avg. Effic.	Kw-hr /Mgal	Avg. Kw	Peak Kw	Cost /day
101	100.00	75.00	516.22	6.63	6.63	0.00
202	100.00	75.00	1235.30	11.90	11.90	0.00
102	0.00	0.00	0.00	0.00	0.00	0.00
203	100.00	75.00	1235.30	11.90	11.90	0.00
201	0.00	0.00	0.00	0.00	0.00	0.00

Demand Charge: 0.00
Total Cost: 0.00

Node Results:

Node ID	Demand GPM	Head ft	Pressure psi	Quality	
4	0.00	8976.08	56.37	0.00	
20	0.00	8976.08	51.60	0.00	
6	0.00	9008.20	68.11	0.00	
8	0.00	9040.56	80.84	0.00	
10	0.00	9072.45	92.05	0.00	
12	0.00	9101.96	108.31	0.00	
16	0.00	9134.90	132.98	0.00	
18	0.00	9134.90	131.68	0.00	
2	0.00	8977.24	58.60	0.00	
14	0.00	9134.63	131.56	0.00	
50	535.00	8902.52	19.72	0.00	
1	-213.97	8854.00	4.33	0.00	Tank
3	-321.04	8840.00	4.33	0.00	Tank

Link Results:

Link ID	Flow GPM	Velocity fps	Unit Headloss ft/Kft	Status	
20	0.00	0.00	0.00	Open	
6	-321.03	8.20	65.17	Open	
8	-321.03	8.20	65.18	Open	
10	321.03	8.20	65.17	Open	
14	-321.03	8.20	65.18	Open	
18	0.01	0.00	0.00	Open	
4	213.97	5.46	30.75	Open	
12	-321.03	8.20	65.18	Open	
9	0.00	0.00	0.00	Closed	
16	321.03	3.64	9.03	Open	
50	535.00	10.79	109.67	Open	
101	213.97	0.00	-123.24	Open	Pump
202	160.52	0.00	-294.90	Open	Pump
102	0.00	0.00	0.00	Closed	Pump
203	160.52	0.00	-294.90	Open	Pump
201	0.00	0.00	0.00	Closed	Pump

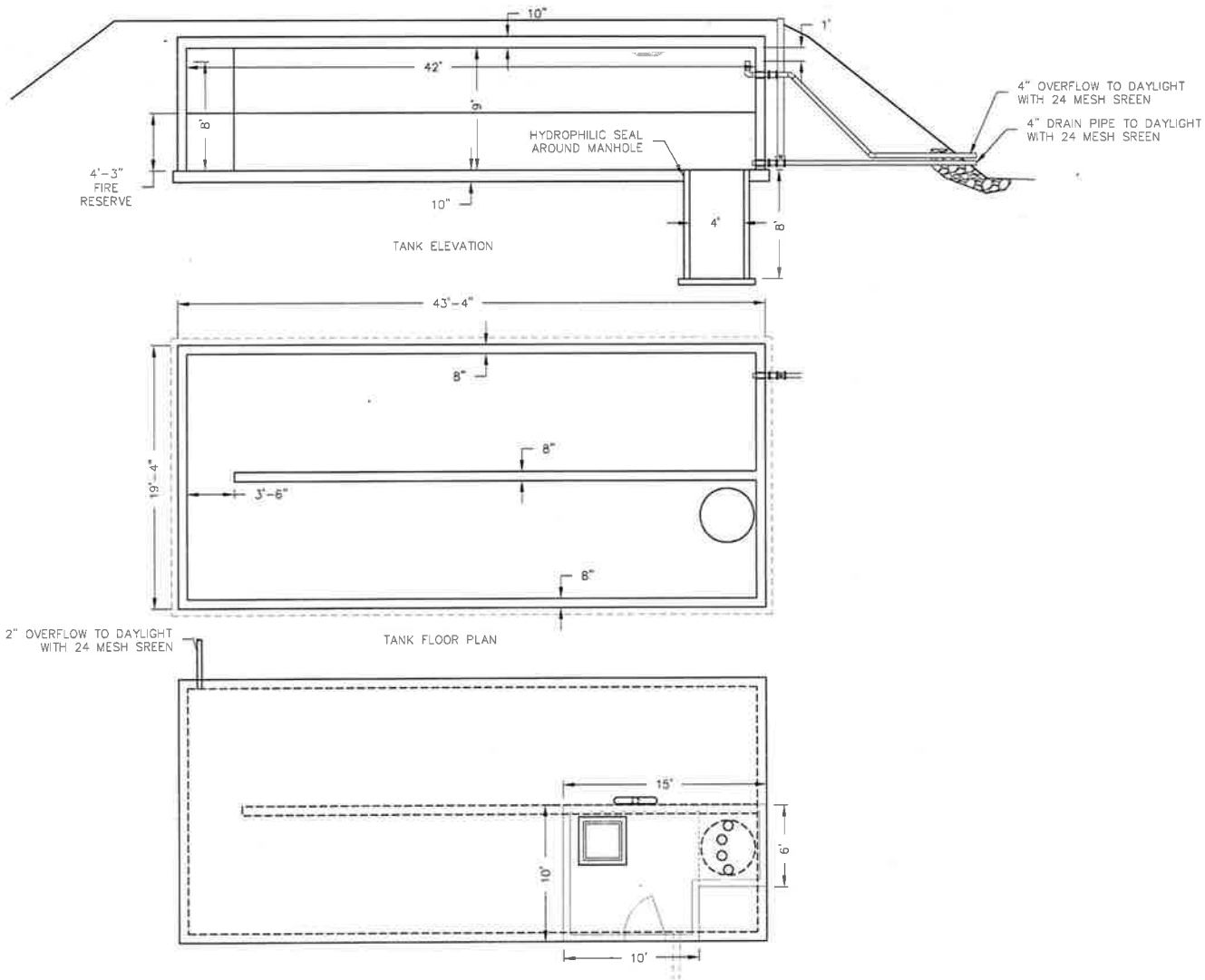

8 4 0 8 16

SCALE: 1/8"=1'

Prepared By:

NCW & Associates, Inc.

P.O. Box 3688 Crested Butte
(970) 349-6384 Colorado 81224

RIVERLAND WATER AND FIRE SYSTEM
GUNNISON COUNTY, COLORADO

NORTH WATER TANK DETAILS
TANK PLAN DETAIL

PROJECT: 12114.00	DWG.: PHNORTH2	DATE: 11/04/14	SHEET 1 OF 4

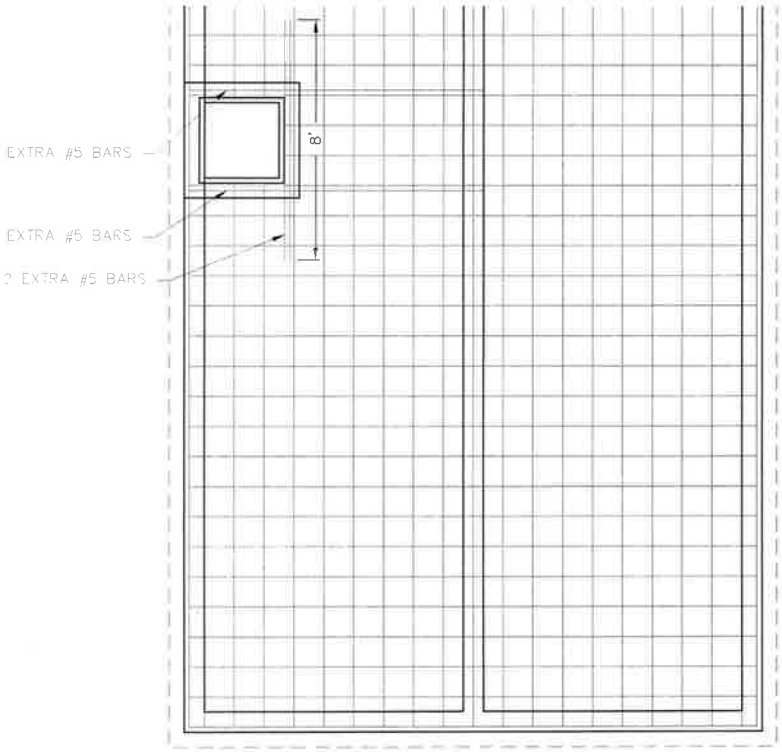

BOTTOM MAT OF LID

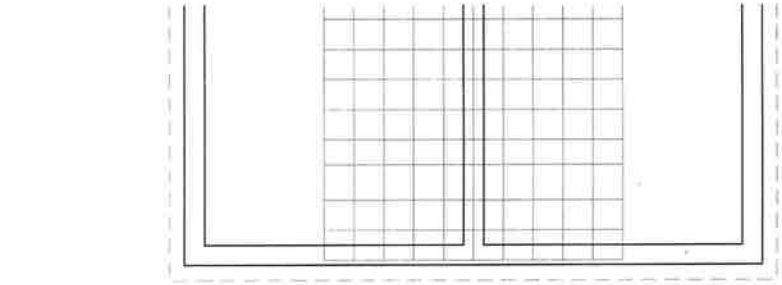

TOP MAT OF LID

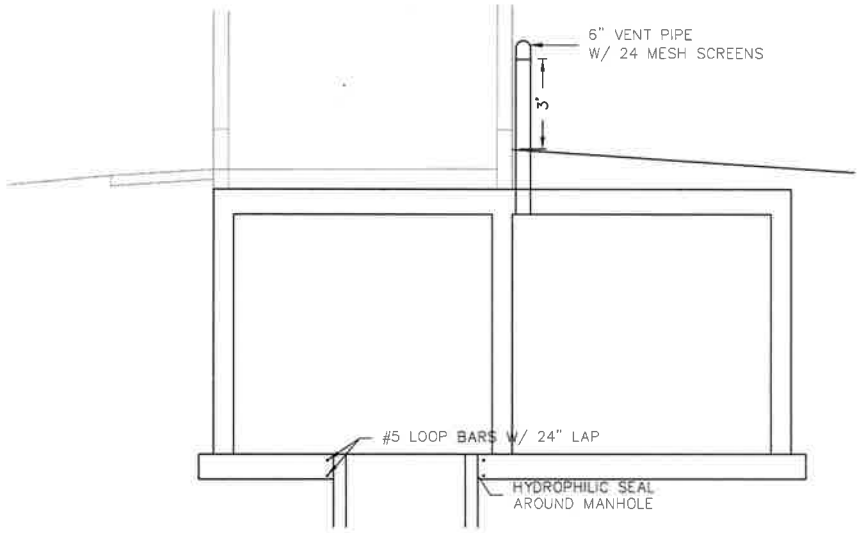

SECTION AT OUTLET AND HATCHES

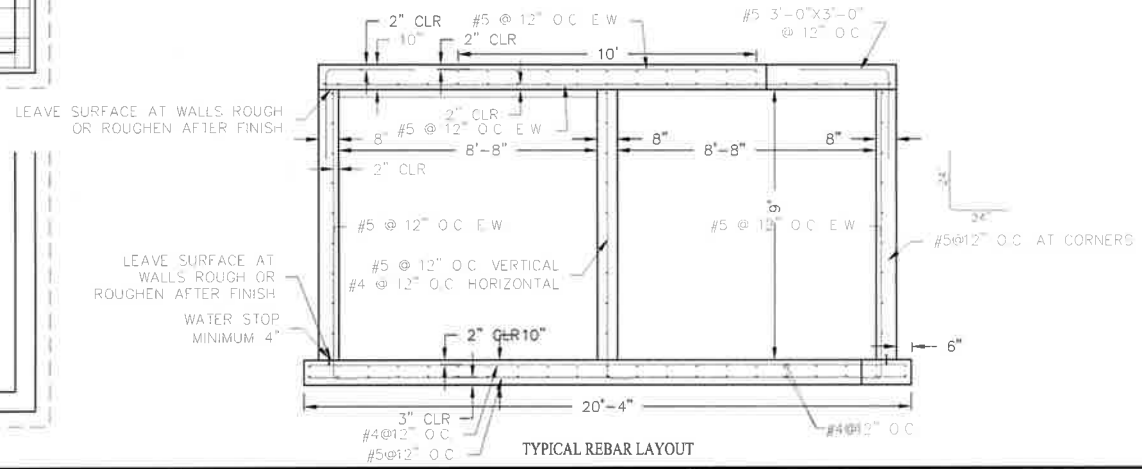

TYPICAL REBAR LAYOUT

4 2 0 4 8

SCALE: 1/4"=1'

Prepared By:

NCW & Associates, Inc.

P.O. Box 3688 Crested Butte
(970) 349-6384 Colorado 81224

RIVERLAND WATER AND FIRE SYSTEM
GUNNISON COUNTY, COLORADO

NORTH WATER TANK DETAILS
TANK REINFORCING DETAIL

PROJECT: 12114.00	DWG.: PHNORTH2	DATE: 11/04/14	SHEET 2 OF 4

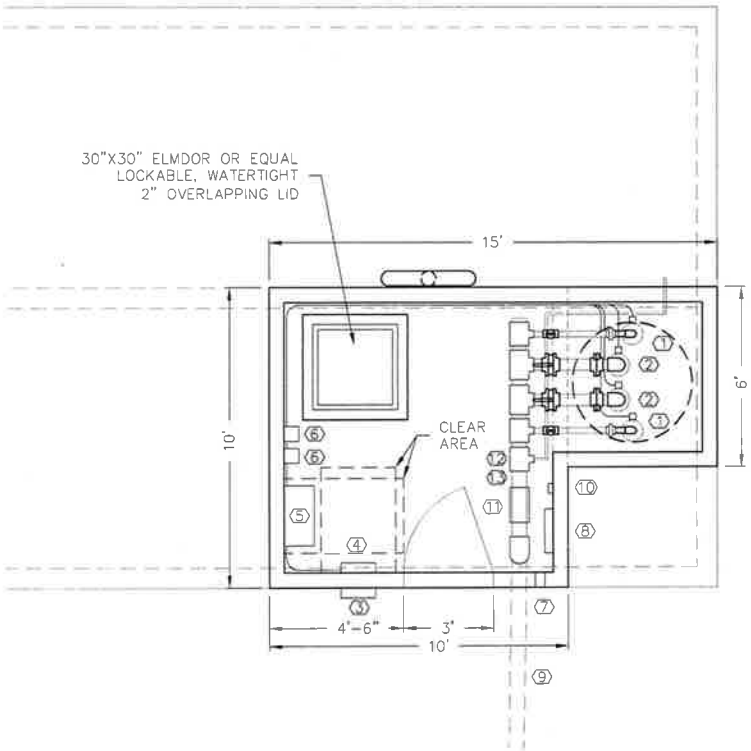

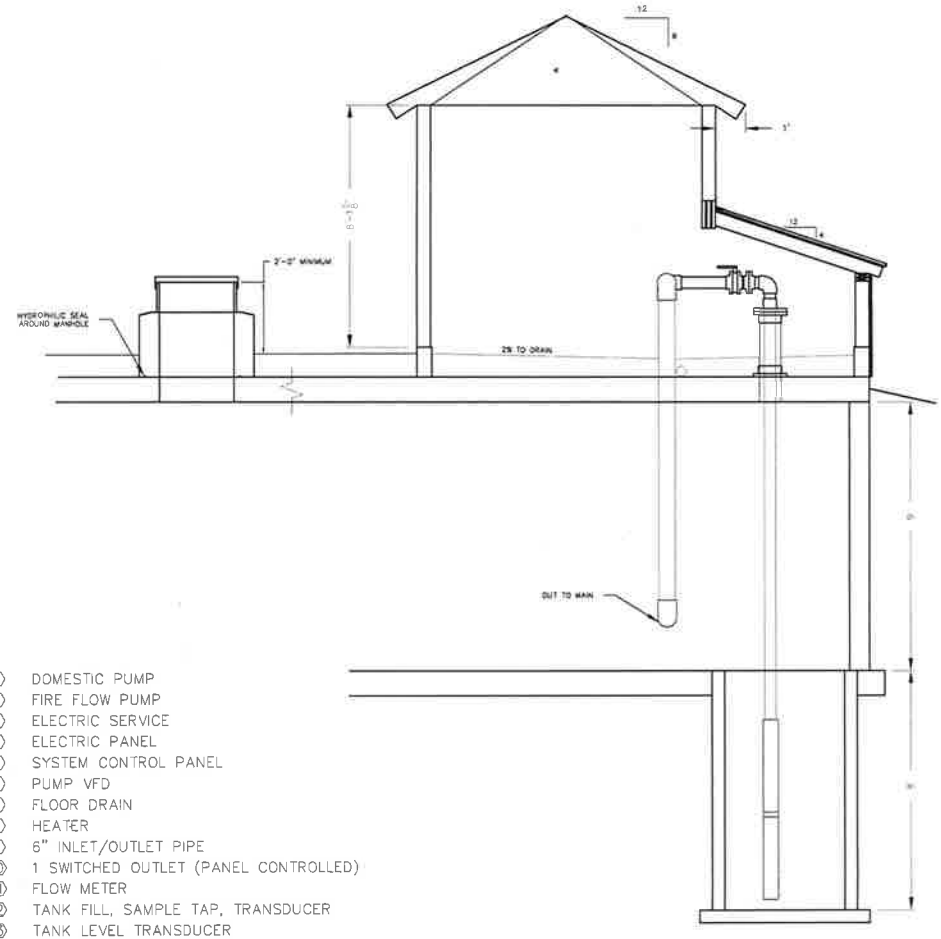

1. DOMESTIC PUMP
2. FIRE FLOW PUMP
3. ELECTRIC SERVICE
4. ELECTRIC PANEL
5. SYSTEM CONTROL PANEL
6. PUMP VFD
7. FLOOR DRAIN
8. HEATER
9. 6" INLET/OUTLET PIPE
10. 1 SWITCHED OUTLET (PANEL CONTROLLED)
11. FLOW METER
12. TANK FILL, SAMPLE TAP, TRANSDUCER
13. TANK LEVEL TRANSDUCER

4 2 0 4 8

SCALE: 1/4"=1'

Prepared By:

NCW & Associates, Inc.

P.O. Box 3688
(970) 349-6384

Crested Butte
Colorado 81224

RIVERLAND WATER AND FIRE SYSTEM
GUNNISON COUNTY, COLORADO

NORTH WATER TANK DETAILS
PUMP HOUSE DETAIL

PROJECT: 12114.00	DWG.: PHNORTH2	DATE: 11/04/14	SHEET 3 OF 4

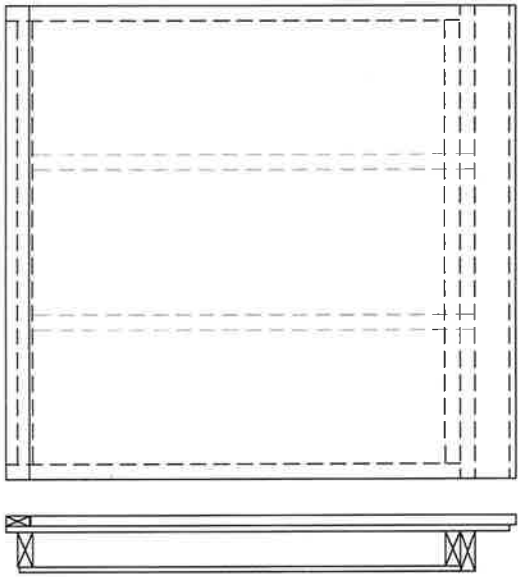

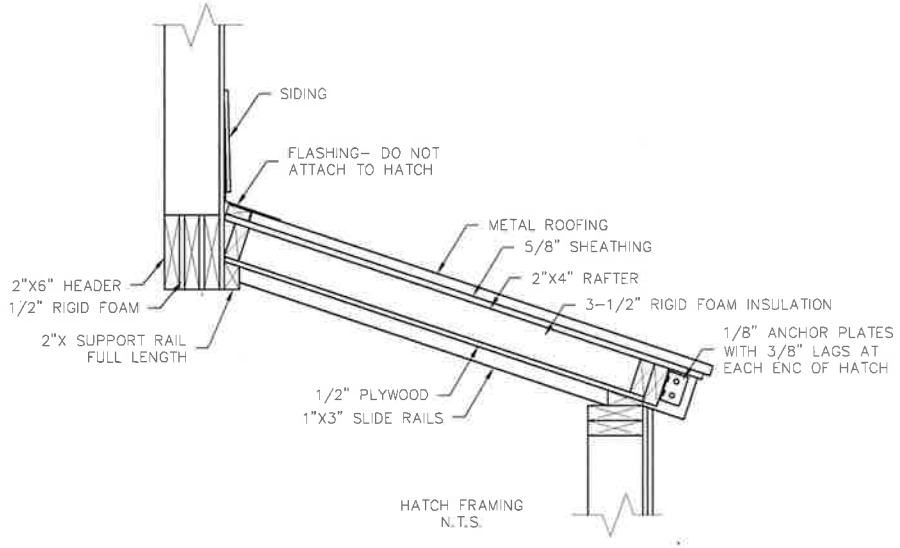

	Prepared By: NCW & Associates, Inc. P.O. Box 3688 Crested Butte (970) 349–6384 Colorado 81224	RIVERLAND WATER AND FIRE SYSTEM GUNNISON COUNTY, COLORADO		NORTH WATER TANK DETAILS REMOVABLE HATCH DETAIL
		PROJECT: 12114.00	DWG.: PHNORTH2	DATE: 11/04/14 SHEET 4 OF 4

S Dominguez Gunnison County, CO 587610
11/12/2008 03:13 PM Pg: 1 of 43
447 R: $0.00 D: $

BOARD OF COUNTY COMMISSIONERS
OF THE COUNTY OF GUNNISON, COLORADO
RESOLUTION NO: 08-47

A RESOLUTION ADOPTING THE 2003 INTERNATIONAL FIRE CODE WITH AMENDMENTS THERETO AND THE CRESTED BUTTE FIRE PROTECTION DISTRICT'S "GUIDELINES, STANDARDS AND FEES FOR THE REVIEW OF FIRE PROTECTION IN PROPOSED INCLUSIONS TO THE CRESTED BUTTE FIRE PROTECTION DISTRICT, AND NEW SUBDIVISIONS, P.U.D.S OR ANY OTHER BUILDABLE PARCEL OF LAND WITHIN THE CRESTED BUTTE FIRE PROTECTION DISTRICT" AND AMENDMENTS THERETO, WITHIN THE CRESTED BUTTE FIRE PROTECTION DISTRICT

WHEREAS, on August 9, 2005, the Crested Butte Fire Protection District (herein "CBFPD") adopted Resolution No: 1, Series 2005, "A Resolution Adopting and Amending the 2003 International Fire Code, Prescribing Regulations Governing Conditions Hazardous to Life and Property from Fire, Hazardous Uses or Explosion, Establishing a Department of Fire Prevention and Providing Officers Therefor and Defining their Powers and Duties" as identified in Appendix "A" attached hereto and incorporated herein; and

WHEREAS, CBFPD's adoption of the 2003 International Fire Code (herein "Fire Code") by Resolution No: 1, Series 2005 also amended the Fire Code with revisions to certain sections and on March 21, 2008, the CBFPD approved further amendments to the Fire Code as identified in Appendix "B" attached hereto and incorporated herein; and

WHEREAS, the CBFPD has also adopted "Guidelines, Standards And Fees For The Review of Fire Protection In Proposed Inclusions To The Crested Butte Fire Protection District, And New Subdivisions, P.U.D.s Or Any Other Buildable Parcel Of Land Within The Crested Butte Fire Protection District", revised August 9, 2005 (herein "Guidelines and Standards") as identified in Appendix "C" attached hereto and incorporated herein which was amended on March 21, 2008 as identified in Appendix "D" attached hereto and incorporated herein; and

WHEREAS, pursuant to C.R.S. §32-1-1002(1)(d), no code shall apply within any municipality or the unincorporated portion of any county unless the governing body of the municipality or county as the case may be, adopts a resolution stating that such code or specific portions shall be applicable within the fire protection district's boundaries; and

WHEREAS, the Gunnison County Planning Commission has reviewed and recommended to the Board of County Commissioners of the County of Gunnison, Colorado (herein the "Board") approval of the Fire Code as amended and with certain changes, amendments and substitutions, as set forth in the August 1, 2008 "Proposed Language for Automatic Fire Sprinkler System Requirements in CBFPD Guidelines & Standards", as identified in Appendix "E" attached hereto and incorporated herein, approval of the CBFPD's Guidelines and Standards; and

WHEREAS, the Gunnison County Public Works Department has also reviewed CBFPD's Guidelines & Standards and with certain changes, amendments and substitutions as identified in Appendix "F" attached hereto and incorporated herein, has recommended to the Board, approval of the CBFPD's Guidelines & Standards; and

WHEREAS, the Board has reviewed and determined that adoption of the Fire Code as amended and with certain changes, amendments and substitutions, adoption of CBFPD's Guidelines and Standards, would be in the best interests of the citizens of Gunnison County residing within the Crested Butte Fire Protection District; and

NOW THEREFORE, BE IT RESOLVED by the Board of County Commissioners of the County of Gunnison, Colorado pursuant to C.R.S. §32-1-1002(1)(d), that the "2003 International Fire Code" with the amendments identified in Appendix "A" and Appendix "B" attached hereto and incorporated herein and the "Guidelines, Standards And Fees For The Review of Fire Protection In Proposed Inclusions To The Crested Butte Fire Protection District, And New Subdivisions, P.U.D.s Or Any Other Buildable Parcel Of Land Within The Crested Butte Fire Protection District", revised August 9, 2005 as identified in Appendix "C" attached hereto and incorporated herein with amendments as identified in Appendix "D" attached hereto and incorporated herein and with the recommended changes, amendments and substitutions, as identified in Appendix "E" and Appendix "F" attached hereto and incorporated herein are hereby adopted for the area lying within the Crested Butte Fire Protection District.

FURTHERMORE, this resolution repeals and supersedes any and all other resolutions regarding prior adopted codes by the Crested Butte Fire Protection District.

INTRODUCED by Commissioner Starr, seconded by Commissioner Swenson, and adopted this 11th day of November, 2008.

BOARD OF COUNTY COMMISSIONERS
OF THE COUNTY OF GUNNISON, COLORADO

By _____
Hap Channell, Chairperson

By _____
Paula Swenson, Vice Chairperson

By _____
Jim Starr, Commissioner

ATTEST:

_____
Deputy County Clerk

GUNNISON COUNTY SEAL COLORADO

CRESTED BUTTE FIRE PROTECTION DISTRICT
Resolution 1
Series 2005

A RESOLUTION ADOPTING AND AMENDING THE 2003 INTERNATIONAL FIRE CODE, PRESCRIBING REGULATIONS GOVERNING CONDITIONS HAZARDOUS TO LIFE AND PROPERTY FROM FIRE, HAZARDOUS USES OR EXPLOSION, ESTABLISHING A DEPARTMENT OF FIRE PREVENTION AND PROVIDING OFFICERS THEREFOR AND DEFINING THEIR POWERS AND DUTIES.

WHEREAS, the Board of Directors (herein "Board") of the Crested Butte Fire Protection District (herein "District") deems it necessary to adopt the following code for the purpose of establishing rules of conduct and standards for the protection of life, health, property, security and welfare of the inhabitants of the District; and

WHEREAS, the Board has considered the effect of fire code enforcement within the boundaries of the District and has determined that enforcement of the proposed code would not cause undue hardship or suppression of economic growth within the District; and

WHEREAS, the Board has studied the necessity for realistic and reasonable level of fire protection to be provided by a rural fire protection district which also includes National Forest, BLM, Colorado State land, unincorporated Gunnison County land, municipalities, large expanses of agricultural land, remote outlying single family residences, some areas of medium to high density residential development, mineral and natural resources extraction, aviation facilities and including some industrial and commercial activities;

NOW, THEREFORE, BE IT RESOLVED THAT:

Section 1. That a certain document, three (3) copies of which are on file in the office of the District Manager of the District, being marked and designated as the ***International Fire Code***, 2003 edition, including Appendix Chapters B, C, D, E, F & G, as published by the International Code Council, be and is hereby adopted as the Fire Code of the District, in the State of Colorado regulating and governing the safeguarding of life and property from fire and explosion hazards arising from the storage, handling and use of hazardous substances, materials and devices, and from conditions hazardous to life or property in the occupancy of buildings and premises as herein provided; providing for the issuance of permits and collection of fees therefore; and each and all of the regulations, provisions, penalties, conditions and terms of said Fire Code on file in the office of the District are hereby referred to, adopted, and made a part hereof, as if fully set out in this resolution, with the additions, insertions, deletions and changes, if any, prescribed in Section 2 of this resolution. State and EPA regulations shall take precedence if there is a conflict with any International Fire Code regulations pertaining to the use, storage, handling of, manufacture of, or dispensing of flammable and combustible liquids, cryogenic materials, aerosols, compressed gases, corrosive materials, explosives and fire works, flammable gases and solids, highly toxic and toxic materials, liquefied petroleum gases, organic peroxides, oxidizers, pyrophoric materials, pyroxylin (cellulose nitrate) plastic, unstable (reactive) materials, water reactive solids and liquids, or any other material which may be characterized or become known as a Hazardous Material.

Section 2. That the followings sections are hereby revised:

SECTION 101 GENERAL

101.1 Title. Insert, [Crested Butte Fire Protection District]

SECTION 102 APPLICABILITY

APPENDIX A

102.6 Referenced Codes and Standards and **102.7 Subjects not regulated by this code**. Add, "The most current NFPA edition shall be utilized."

SECTION 106 INSPECTIONS

Add, "**106.4 Requests for inspections.** Requests for inspections shall be submitted at least five (5) working days prior to the date of the requested inspections."

SECTION 108 BOARD OF APPEALS

108.1 Add, "The Board of Directors of the District shall be considered as the Board of Appeals."

SECTION 109 VIOLATIONS

109.3 Violation penalties. Insert, "...shall be guilty of a [misdemeanor], punishable by a fine of not less than [50.00] dollars nor more than [1,000.00] dollars or by imprisonment not exceeding [1 year], or both such fine and imprisonment."

SECTION 111 STOP WORK ORDER

111.4 Failure to Comply. Insert, "...shall be liable to a fine of not less than [50.00] dollars or more than [1.000.00] Dollars."

SECTION 508 FIRE PROTECTION WATER SUPPLIES

Add, "**508.1.1 Inadequate Water Supply.** Where required fire flows cannot be provided, an approved fire suppression system complying with Section 9 of this code and the Guidelines & Standards of the District shall be installed throughout every occupancy and structure within the boundaries of the District."

508.5.4 Obstruction. Add, "Snow and/or snow removal operations shall not prevent fire hydrants from being immediately discernible or hinder gaining immediate access."

SECTION 603 FUEL-FIRED APPLIANCES

603.9 Gas Meters. Add, "Locations of gas meters, regulators and piping shall comply with this section and the Guidelines & Standards of the District."

SECTION 903 AUTOMATIC SPRINKLER SYSTEMS

903.2.1.2 Group A-2. Amend sentence, "...occupant load of 100 or more."

903.4 Sprinkler system monitoring and alarms. Add to existing sentence, "Automatic sprinkler systems protecting one, two or multiple family dwellings that are not required to be centrally monitored shall comply with the Guidelines & Standards of the District for Early Warning & Alerting Devices."

Exceptions: Delete #1.

SECTION 907 FIRE ALARM AND DETECTION SYSTEMS

907.2.1 Group A. Replace existing sentence with, "A manual and automatic fire alarm system shall be installed in accordance with NFPA 72 in group A occupancies having an occupant load of 100 or more. Portions of Group E occupancies occupied for assembly purposes shall be provided with a fire alarm as required for the Group E occupancy."

Exceptions: Delete.

907.2.2 Group B. Replace existing sentence with, "A manual fire alarm system shall be installed in Group B occupancies having an occupant load of 100 or more persons or more than 50 persons above or below the lowest level of exit discharge."

Exceptions: Delete.

907.2.7 Group M. Exceptions: Delete.

907.2.8.1 Manual fire alarm system. Exceptions: Delete.

907.2.8.2 Automatic fire alarm system. Replace existing sentence with, "An automatic fire alarm system shall be installed throughout all interior corridors serving guestrooms, all common areas, laundry rooms, and mechanical rooms."

907.4.1 Location. Exceptions: Delete.

SECTION 1026 MEANS OF EGRESS FOR EXISTING BUILDINGS

1026.5 Illumination emergency power. 2. Replace existing sentence with, "Group B buildings three or more stories in height or buildings with 100 or more total occupants."

SECTION 3301 GENERAL

3301.2.4 Financial responsibility. Replace the word "jurisdiction" with "District".

SECTION 3803 INSTALLATION OF EQUIPMENT

3803.3 Location of equipment and piping. Add 2nd sentence to read, "Locations of gas meters, regulators and piping shall comply with this section and the Guidelines & Standards of the District."

CHAPTER 45 REFERENCED STANDARDS

Add to 1st paragraph, "The most current NFPA edition shall be utilized." Add a bold subsection titled, "**CBFPD**-The most current edition of the *Guidelines, Standards And Fees For The Review Of Fire Protection In Proposed Inclusions To The Crested Butte Fire Protection District, And New Subdivisions, P.U.D.s Or Any Other Buildable Parcel Of Land Within The Crested Butte Fire Protection District.* (Herein 'Guidelines & Standards of the District')"

APPENDIX B, FIRE-FLOW REQUIREMENTS FOR BUILDINGS

B103 MODIFICATIONS

Add, "**B103.1.1 Inadequate Water Supply.** Where required fire flows cannot be provided, an approved fire suppression system complying with Section 9 of this code and the Guidelines & Standards of the District shall be installed throughout every occupancy and structure within the boundaries of the District."

APPENDIX D, FIRE APPARATUS ACCESS ROADS

D101 GENERAL

D101.1 Scope. Change to read, "Fire apparatus access roads shall be in accordance with this appendix, the Guidelines & Standards of the District and all other applicable requirements of the ***International Fire Code***."

D103 MINIMUM SPECIFICATIONS

D103.1 Delete and change to read, "Minimum specifications for fire apparatus access roads shall comply with the Guidelines & Standards of the District."

D103.2 Delete

D103.3 Delete

D103.4 Delete

D103.5 Delete

D103.6 Signs. Change to **D103.2.**

Section 3. That the geographic limits referred to in certain sections of the 2003 ***International Fire Code*** are hereby established as follows:

SECTION 3204 STORAGE

3204.3.1.1 Location. Replace second paragraph with, "Storage of flammable cryogenic fluids in stationary containers is prohibited within the boundaries of the District upon parcels with a population density of one living unit or greater per acre. In the event of a conflict with Colorado State or Federal EPA regulations the more stringent regulations shall apply."

Exception: Tanks legally in existence at the time of the adoption of this resolution, providing they do not pose undo fire or safety hazards."

SECTION 3404 STORAGE

3404.2.9.5.1 Locations where aboveground tanks are prohibited. Replace existing sentence with, "Storage of Class I and Class II liquids in aboveground tanks outside of buildings is prohibited within the boundaries of the District upon parcels with a population density of one living unit or greater per acre. In the event of a conflict with Colorado State or Federal EPA regulations the more stringent regulations shall apply.

Exception: Tanks legally in existence at the time of the adoption of this resolution, providing they do not pose undo fire or safety hazards."

SECTION 3406 SPECIAL OPERATIONS

3406.2.4.4 Locations where aboveground tanks are prohibited Replace existing sentence with, "Storage of Class I and Class II liquids in aboveground tanks is prohibited within the boundaries of the District upon parcels with a population density of one living unit or greater per

acre. In the event of a conflict with Colorado State or Federal EPA regulations the more stringent regulations shall apply.

Exception: Tanks legally in existence at the time of the adoption of this resolution, providing they do not pose undo fire or safety hazards."

SECTION 3804 LOCATION OF CONTAINERS

3804.2 Maximum capacity within established limits. Replace existing sentence with: "Within the boundaries of the District, restricting the storage of liquefied petroleum gas for the protection of heavily populated or congested areas, the aggregate capacity of any one installation shall not exceed a water capacity of 2,000 gallons."

Section 4. That Resolution No.1, Series 1995 of the District adopting the 1991 Uniform Fire Code, Resolution No.1, Series 2004 of the District adopting the 1997 Uniform Fire Code, and all other resolutions or parts of resolutions in conflict herewith are hereby repealed.

Section 5. That if any section, subsection, sentence, clause or phrase of this resolution is, for any reason, held to be unconstitutional; such decision shall not affect the validity of the remaining portions of this resolution. The District hereby declares that it would have passed this resolution, and each section, subsection, clause or phrase thereof, irrespective of the fact that any one or more sections, subsections, sentences, clauses and phrases be declared unconstitutional.

Section 6. That nothing in this resolution or in the Fire Code hereby adopted shall be construed to affect any suit or proceeding impending in any court, or any rights acquired, or liability incurred, or any cause or causes of action acquired or existing, under any act or resolution hereby repealed as cited in Sections 2 & 4 of this ordinance; nor shall any just or legal right or remedy of any character be lost, impaired or affected by this resolution.

Section 7. That the District Manager is hereby ordered and directed to cause this resolution to be published.

Section 8. That this resolution and the rules, regulations, provisions, requirements, orders and matters established and adopted hereby shall take effect and by in full force and effect on the date when the governing bodies of Gunnison County and/or the municipalities of Crested Butte and Mt Crested Butte pass this resolution from and after the date of its final passage and adoption.

Section 9: DATE OF EFFECT.

This resolution shall take effect and be enforced within incorporated municipalities and unincorporated portions of Gunnison County from and after its approval as set forth in section 32-1-1002(1)(d), C.R.S.

Adopted this 9th day of August, 2005

CRESTED BUTTE FIRE PROTECTION DISTRICT

By _____
Jeffery Neumann, President and Chairperson

ATTEST:

_____
Hank Smith, Secretary

S Dominguez Gunnison County, CO 587610
11/12/2008 03:13 PM Pg: 8 of 43
447 R: $0.00 D: $

APPROVED—3/21/08

AMENDMENT TO 2003 INTERNATIONAL FIRE CODE
CHAPTER 7
FIRE-RESISTANCE-RATED CONSTRUCTION

ADD:

NEW

SECTION 705
GARAGES AND CARPORTS

705.1 Area separation. In the one-hour occupancy separation between Group R, Division 3 and Group U Occupancies, the separation may be limited to the installation of materials approved for one-hour fire-resistive construction on the garage side and a self-closing, tightfitting, gasketed solid-wood door 1 3/8 inches in thickness, or a self-closing, tightfitting, gasketed door assembly having a fire-protection rating of not less than 20 minutes.

CHAPTER 10
MEANS OF EGRESS
SECTION 1006
MEANS OF EGRESS ILLUMINATION

ADD:

NEW

1006.5 Floor-level Exit Signs. Where the Building Code requires exit signs, additional approved low-level exit signs that are internally or externally illuminated, photo luminescent or self-luminous, shall be provided in all corridors serving guest rooms of hotels in Group R, Division 1 and Division 2 Occupancies. The bottom of such signs shall not be less than 6 inches (152 mm) nor more than 8 inches (203 mm) above the floor level and shall indicate the path of exit travel. For exit and exit-access doors, the sign shall be on the door or adjacent to the door with the closest edge of the sign within 4 inches (102 mm) of the doorframe.

S Dominguez Gunnison County, CO 587610
11/12/2008 03:13 PM Pg: 9 of 43
447 R: $0.00 D: $

APPROVED—3/21/08

AMENDMENT TO 2003 INTERNATIONAL FIRE CODE
APPENDIX B
FIRE-FLOW REQUIREMENTS FOR BUILDINGS
SECTION B103
MODIFICATIONS

ADD:

B103.4 Buildings without minimum fire-flow requirements. Any building not serviced by a water supply system capable of providing the minimum fire-flow requirements shall install an approved automatic sprinkler system.

Exceptions: Isolated rural buildings shall be exempt if any of the following conditions apply:

1. Emergency vehicle access to the property is seasonal.
2. The property is located beyond maintained roads.
3. The property is located beyond emergency vehicle access.
4. The property is not served with electricity by a public utility.

B103.4.1 New buildings. All new buildings regardless of floor area. For the purpose of this section, the floor area within the surrounding exterior walls shall be considered as one building. Area separation walls shall not be used in calculating allowable floor area for sprinkler requirements. In occupancies of a hazardous nature or where special hazards exist, reference 2003 IFC § 901.4.3.

Exceptions:

1. Detached carports and greenhouses
2. Sheds and auxiliary structures not used for human habitation. See definition for Habitable Space.
3. When expenditures are strictly related to repair or maintenance of an existing building.

B103.4.2 Existing buildings. Throughout existing and new sections of any existing building whenever total additions resulting in an increase of the original floor area by more than 50 percent, or whenever total additions result in an increase of more than 1,000 square feet in the total floor area, including mezzanines or additional stories, or whenever alterations to existing building exceed 50 percent of the replacement value, as determined by the building official. Alteration values and additional floor area shall be cumulative with each issuance of a building permit, regardless of any change in ownership.

Exceptions:

1. Detached carports and greenhouses
2. Sheds and auxiliary structures not used for human habitation. See definition for Habitable Space.
3. When expenditures are strictly related to repair or maintenance of an existing building.

B103.4.3 Change of occupancy. For all existing and new sections of an existing building for which there is an occupancy classification change.

S Dominguez Gunnison County, CO 587610
11/12/2008 03:13 PM Pg: 10 of 43
447 R: $0.00 D: $

Guidelines, Standards And Fees For The Review Of Fire Protection In Proposed Inclusions To The Crested Butte Fire Protection District, And New Subdivisions, P.U.D.s Or Any Other Buildable Parcel Of Land Within The Crested Butte Fire Protection District

Revised August 9, 2005

APPENDIX C

Table of Contents

		Page
SECTION 1	GENERAL REQUIREMENTS	4
101.	Inclusion of Property	4
102.	Plans Submittal	4
103.	Conflicting Provisions	4
SECTION 2	ACCESS REQUIREMENTS	4
201.	Access	4
202.	Road Grades	5
203.	Access Roads	5
204.	Cul-de-sacs and Turn-arounds	6
205.	Driveways	6
206.	Bridges and Low Water Crossings	8
SECTION 3	WATER SUPPLY REQUIREMENTS	8
301.	Central Water Supply	8
302.	Hydrants	8
303.	Water Sources	8
304.	Annual Certification	9
SECTION 4	FIRE SUPRESSION SYSTEM REQUIREMENTS	9
401.	Access Deficiencies	9
402.	Water Supply Deficiencies	9
SECTION 5	WILDLAND FIRE MITIGATION	10
501.	Compliance With Existing or Other Standards	10
SECTION 6	UTILITIES	10
601.	Review and Approval of Gas Service Location	10
602.	Excavation	11
603.	Early Warning And Alerting Devices	11
604.	Protection of Meters and Service Lines	11
SECTION 7	REVIEW AND APPROVAL BY THE FIRE CHIEF AND THE BOARD OF DIRECTORS	11
701.	Review	11
702.	Approval	12
703.	Waivers	12

SECTION 8 FEES 13

801. Plan Review Fee Schedule 13
802. Fire Suppression System Review Fee Schedule 14

SECTION 9 DEFINATIONS AND ABREVIATIONS 14

APPENDIX A SUMMARY OF ACCESS ROAD AND DRIVEWAY ELEMENTS 19
APPENDIX B STANDARD TURNAROUND OPTIONS 20
APPENDIX C TYPICAL TURNOUTS 21
APPENDIX D REVIEW FEES 22

SECTION 1. GENERAL REQUIREMENTS

101. Inclusion of Property

A. The owner or developer of proposed inclusion of property to the Crested Butte Fire Protection District shall conform to the requirements set forth in Section 32, part IV, INCLUSION OF TERRITORY, of the Colorado Revised Statutes.

102. Plans Submittal

A. The owner or developer of each inclusion, subdivision, P.U.D. or each buildable parcel of land, shall submit a fire protection plan to the Crested Butte Fire Protection District for review and approval. The Plan shall consist of plans, specifications, covenants, deed restrictions and contracts as deemed necessary by the Fire Chief to show compliance with Sections 2 through Section 8 of this resolution.

103. Conflicting Provisions

A. Where there is a conflict between a general requirement and a specific requirement, the specific requirement shall be applicable. Where there is a conflict between the Crested Butte Fire Protection District Guidelines and Standards, Colorado State or Federal EPA regulations, and any other applicable municipal or Gunnison County requirements, the more stringent requirement shall apply.

SECTION 2. ACCESS REQUIREMENTS

201. Access

A. All fire apparatus access roads shall comply with the Guidelines and Standards of the Crested Butte Fire Protection District and Appendix D of the 2003 International Fire Code, as amended.
B. Roads, streets and ways, whether public or private, shall provide for safe simultaneous access for emergency vehicles and civilian evacuation. The Crested Butte Fire Protection District shall be permitted to allow modification of access requirements where the structures being protected are provided with centrally monitored fire protection systems.
C. All developments are encouraged to provide two or more points of dedicated access on primary roads that permit adequately separated ingress/egress. The design of access routes shall consider traffic circulation and employ looped road networks. See Gunnison County LUR Section 5-307 B 1 and Appendix D of the 2003 International Fire Code.
D. All structures located within the boundaries of the Crested Butte Fire Protection District, shall have access roads with all weather driving surfaces capable of supporting the imposed loads of emergency apparatus.
E. Streets and roads shall be identified with approved signs. All road identification signs and supports located within the Urban-Wildland interface shall be of non-combustible materials. All road identification signs shall be visible from both directions of travel. Temporary signs shall be installed at each street intersection when construction of new roadways allows passage by vehicles. Temporary signs shall be of an approved size, weather resistant and be maintained until replaced by permanent signs. All required road signs and traffic control

devices shall be installed in accordance with the Manual of Uniform Traffic Control Devices, current edition. No road names or numbers shall be used which will duplicate, or be confused with, the names of any existing street or road in the Crested Butte Fire Protection District. If the road name or number is for a road that has not been accepted by Gunnison County for maintenance, the applicant, homeowner's association, or the developer of the affected road is responsible for the road name or number sign(s).

F. New and existing buildings shall have approved address numbers, building numbers, or approved building identification placed in a position to be plainly legible and visible from the street or road fronting the property. If the identification on a building cannot be plainly seen from the street or road fronting the property, then redundant identification shall be provided at the entrance to the driveway or access road. Identification of buildings shall contrast with their background. Address identification shall be Arabic numerals or alphabet letters. Numbers and/or letters shall be a minimum of 4 inches high with a minimum stroke width of 0.5 inch.

G. Where multiple addresses are required at a single driveway, they shall be mounted on a single post, and additional signs shall be posted at locations where driveways divide.

202. Road Grades

A. Normal road grades shall not exceed 11 percent.
B. Sections not exceeding 300 feet may be allowed a maximum grade of 12 percent, if approved by the Fire Chief.
C. Sections exceeding 11 percent shall not be within 500 feet of each other.
D. Curves with centerline radius of less than 250 feet shall not exceed 8 percent grade.
E. In flat or rolling terrain, all grades shall flatten to 4 percent for at least 100 feet approaching intersections, and for at least 50 feet entering and leaving turn-arounds or cul-de-sacs. In mountainous terrain, all grades shall flatten to 6 percent or less for at least 50 feet approaching intersections and entering switchbacks or cul-de-sacs. Note: Flat or rolling terrain is defined as 15 % average cross slope, mountainous terrain is defined as greater than 15% average cross slope.

203. Access Roads

A. Shall meet the requirements of Section 2.
B. All access roads shall receive a functional classification as determined by the appropriate municipal public works or planning department official or the Director of Gunnison County Public Works Department.
C. All access roads with an ADT of 200 or more shall have a driving surface of 24 feet. Access roads with an ADT of 91-199 shall have a driving surface of 22 feet. Access roads with an ADT of 21-90 shall have a driving surface of 16 feet. See Appendix A.
D. All access roads shall be constructed to meet all municipal guidelines and standards for road and bridge construction and/or Gunnison County Standards and Specifications For Road and Bridge Construction.
E. All access roads shall have a minimum inside turning radius of 40 feet.
F. The required width of primary access roadways shall not be obstructed in any manner, including the parking of vehicles. **"NO PARKING"** signs and/or other appropriate notices prohibiting obstructions may be required and shall be maintained.
G. The access roadway shall be extended to within 150 feet of all portions of the exterior walls of the first story of any building.

Exception: Distance may be extended to 225 feet if the building has an approved fire suppression system and the Fire Department Connection is readily accessible.

H. All access roads in excess of 600 feet in length shall be required to have standard inter-visible turnouts. The location and spacing of inter-visible turnouts shall be determined on a case-by-case basis. See also "Inter-visible Turnout" and Appendix C.

I. All access roads in excess of 150 feet in length that do not connect or intersect with other roads shall have a cul-de-sac, loop design, a "Y" or a "T" turn-around at the end of the access road segment. See Appendix B.

J. All access roads shall have a minimum vertical clearance of 13 feet-6 inches.

K. An access road approach that is gated shall be designed so that the longest vehicle using it can completely clear the traveled way when the gate is closed. In no event shall such distance be less than 35 feet. All gates shall open inward or upward. The clear opening through the gate shall be 2 feet wider than the traveled way. A siren activated opening device shall be installed to enable responding emergency units immediate passage through the gate. The Crested Butte Fire Protection District may be provided with an approved key or access code in lieu of a siren activated gate with the approval of the Fire Chief. All gates shall be installed with a "breakaway" construction feature in a manner that allows emergency vehicle access.

204. Cul-de-sacs and Turn-arounds

A. All cul-de-sacs and turn-arounds shall be constructed to meet all municipal guidelines and standards for road and bridge construction and/or Gunnison County Standards and Specifications For Road and Bridge Construction. See Appendix B.

B. A cul-de-sac or turn-around, which may be vacated in the future, shall be improved to the functional classification standard of the road for which it serves if access is provided to dwellings or other structures.

C. Cul-de-sacs, "T" and "Y" turn-arounds shall be a minimum of 20 feet and a maximum of 60 feet from any flammable structure and shall be approved on a case-by-case basis at the plan review phase.

D. Shall provide shoulders for drainage and snow storage. See Gunnison County Standards and Specifications For Road and Bridge Construction, Section 4.8 or the appropriate municipal guidelines.

205. Driveways

A. Access to all buildings must allow a fire apparatus to stage within 150 feet of all portions of the exterior walls of the first story of any building. This distance may be increased to 225 feet if the structure is protected by an approved fire suppression system. Access to any building must be obtained from within it's own building lot. In the event that a residential building lot is of a size and configuration that the staging requirement can be met from the access roadway, section 205 Driveways, B-W, shall not apply.

B. All driveways shall serve no more than 1 lot. See also definitions for "Access", "Driveway" and reference Gunnison County LUR Section 2-102, definition of "driveway".

C. All residential access driveways shall serve no more than 2 dwelling units. See also definitions for "Access", "Driveway", "Dwelling" and "Dwelling Unit".

D. All residential access driveways serving multifamily residences shall be reviewed to determine if a higher functional classification is appropriate. See Appendix A.

E. All driveways serving occupancies other than residences shall be reviewed on a case-by-case basis at the plan review stage.
F. All driveways shall have a minimum driving surface width of 16 feet.
G. All driveways shall be constructed in accordance with both an approved driveway permit and all applicable sections of these Guidelines, Standards and Fees. Access to a Gunnison County road or right-of-way must be obtained as described in Section 7.4 of the Gunnison County Standards and Specifications for Road and Bridge Construction. Access to a municipal road or right-of-way must be obtained from the appropriate municipal planning department.
H. All driveways shall be constructed to meet all municipal or Gunnison County Standards and Specifications for Road and Bridge Construction from the edge of the municipal, Gunnison County, public or private road under municipal or Gunnison County jurisdiction, to the building footprint.
I. All driveways shall be constructed of a hard all-weather driving surface, capable of supporting the weight of emergency vehicles.
J. All driveways shall have a maximum grade of 11 percent.
K. Driveways shall not exceed a grade of 4 percent for a minimum of 30 feet before the intersection with the edge of the road.
L. All residential access driveways that access a municipal or Gunnison County road or right-of-way, shall have a minimum surface width of 18 feet at the edge of the pavement or road surface, and taper to a minimum surface width of 16 feet at a distance of 6 feet from the edge of the road, and maintain this surface width to the edge of the building footprint.
M. All driveways shall be constructed with a minimum inside turning radius of 40 feet.
N. All driveways and approaches shall be constructed so that they shall not interfere with the drainage system of the roadway.
O. The horizontal axis of an approach to the roadway shall normally be at right angle to the centerline of the roadway and extend a minimum of 40 feet beyond the edge of the traveled way. An angle between 90 and 60 degrees shall be permitted if it can be shown that physical constraints exist that requires a new approach angle of less than 90 degrees. An angle of less than 60 degrees is not permitted.
P. All driveways in excess of 600 feet in length shall be required to have standard inter-visible turnouts. The location and spacing of inter-visible turnouts shall be determined on a case-by-case basis. See also "Inter-visible Turnout" and Appendix C.
Q. All driveways in excess of 150 feet in length shall have a loop design or approved turn around adequate to accommodate emergency service vehicles. Cul-de-sacs, "T" and "Y" turn-arounds shall be a minimum of 20 feet and a maximum of 60 feet from any flammable structure and shall be approved on a case-by-case basis at the plan check phase. See Appendix B.
R. All turn around areas shall be kept open and clear at all times and shall have sufficient area for snow storage outside of the road prism. It shall be the owner's responsibility to keep the area clear of snow in the winter. See Appendix B.
S. Any proposed driveway that is over 250 feet in length and has the potential to be used for a road for future development shall be referred to the appropriate municipal or Gunnison County planning department for proper review.
T. Vertical clearance for any overhead entry structures shall be at least 13 feet-6 inches high, measured from the road surface, and shall be maintained to the edge of the building footprint.
U. Adequate vehicle parking must be provided on the private parcel. No parking along the road, in turnouts or turn-arounds will be permitted.

V. Driveways located near an intersection shall be constructed so that the side nearest the intersection is no less than 100 feet from the centerline of the intersecting road for commercial/industrial access and 50 feet for residential access.
W. A driveway that is gated shall be designed in accordance with section 203 K.

206. Bridges and Low Water Crossings

A. Where a bridge or a low water crossing is required to be used as access, it shall be constructed and maintained in accordance with nationally recognized standards, the standards of the appropriate municipality, or Gunnison County Standards And Specifications For Road And Bridge Construction.
B. Bridges and low water crossings shall maintain a minimum clear roadway width equal to width of the approach road.
C. All bridges shall be designed for a live load sufficient to carry the imposed loads of emergency vehicles.
D. Bridges shall have their legal load limits plainly displayed at both entrances.

SECTION 3. WATER SUP PLY REQUIREMENTS

301. Central Water Supply

A. A central water supply is required when the subdivision density is greater than one dwelling unit per two acres.
B. The system shall supply the required fire flow as determined by the Fire Chief in accordance with computations using the currently adopted Fire Code appendix, as amended.
C. The minimum pipe size serving fire hydrants and domestic systems shall be 8 inches in diameter, unless an engineered study can provide certification that a looped 6-inch system will deliver adequate fire flows.
D. The system shall be approved, installed and tested prior to the issuing of any building permits.

302. Hydrants

A. Fire hydrants shall be located as required by the Fire Chief in accordance with the currently adopted Fire Code appendix, as amended.
B. The Fire Chief shall approve the location of all fire hydrants.
C. All fire hydrants on a central water supply shall be of the same manufacturer and have two 2 1/2 inch NST outlets with caps and one 4 1/2 inch NST outlet with cap. Each hydrant shall be supplied with an approved snow cover marker and shall be installed so that the outlets are no closer than 3 feet above finished grade.
D. All fire hydrants shall be installed with "Snow Country Risers".

303. Alternate Water Sources

A. In subdivisions, P.U.D.s or any other buildable parcel of land within the Crested Butte Fire Protection District without a central water supply, an alternate water source approved by the Fire Chief shall be established to provide the required storage. NFPA 1142 *Standard On Water Supplies For Suburban And Rural Fire Fighting,* current edition, shall be used as a guide in establishing requirements.

304. Annual Certifications

A. For all water sources other than an approved central water system, an annual certification shall be provided to the Fire Chief to ensure a viable year-round water supply.

SECTION 4. FIRE SU PRESSION SYSTEM REQUIREMENTS

401. Access Deficiencies

A. Where the design criteria of sections 201-206 cannot be met, or any one of the following conditions exist:
   1. The fire department apparatus access roadways are obstructed by any of the following items:
      a. Low water crossings or,
      b. Security gates or,
      c. Speed bumps or,
   2. The building is located in a sub-division having a single fire apparatus access point or, Exception: developments of 30 or less total dwelling units that are compliant with all other sections of this Guidelines and Standards Policy.
   3. The access road is equal to or greater than a 12 percent grade or,
   4. The building site is more than 5 miles from the nearest fire station on an approved route as measured by the Fire Chief or,
   5. A fire hydrant capable of supplying the required fire flow is more than 500 feet from the building site or,
   6. When a variance has been granted by the Crested Butte Fire Protection District Board of Directors in areas of non-compliance,

   the following shall be provided as required by the Fire Chief:
   1. All structures shall have installed a fire suppression system in accordance with NFPA 13 *Standard for the Installation of Sprinkler Systems*, 13D *Standard for the Installation of Sprinklers Systems in One- and Two-Family Dwellings and Manufactured Homes* or 13R *Standard for the Installation of Sprinklers Systems in Residential Occupancies up to and Including Four Stories in Height,* current edition, by covenant and,
   2. Installed fire protection systems shall be monitored and supervised by an approved central station fire alarm company and,
   3. The size of the storage tank shall be double the required amount per the applicable NFPA standard or based on 30 gallons per minute response time, at posted speed limits, measured from the nearest fire station, whichever is greater.

402. Water Supply Deficiencies

A. Where the design criteria of sections 301-302 cannot be met, the following shall be provided as required by the Fire Chief:
   1. All structures shall have installed a fire suppression system in accordance with NFPA 13 *Standard for the Installation of Sprinkler Systems*, 13D *Standard for the Installation of Sprinklers Systems in One- and Two-Family Dwellings and Manufactured Homes* or 13R *Standard for the Installation of Sprinklers Systems in Residential Occupancies up to and Including Four Stories in Height,* current edition, by covenant and,

2. Installed fire protection systems shall be monitored and supervised by an approved central station fire alarm company and,
3. The size of the storage tank shall be double the required amount per the applicable NFPA standard or based on 30 gallons per minute response time, at posted speed limits, measured from the nearest fire station, whichever is greater.

SECTION 5. WILDLAND FIRE MITIGATION

501. Compliance With Existing or Other Standards

A. Subdivisions, P.U.D.s or any other buildable parcel of land in forested or other areas subject to wildland fires, shall comply with NFPA 1144 *Standard for Protection of Life and Property from Wildfire* current edition, NFPA 1141 *Standard for Fire Protection in Planned Building Groups* current edition and all Colorado State Forest Service recommendations.

SECTION 6. UTILITIE S

601. Review And Approval Of Gas Service Location

A. The Crested Butte Fire Protection District, the appropriate municipal or Gunnison County building department and the appropriate natural gas company representative shall approve all natural gas meter locations prior to installation.
B. The following requirements shall be used in determining the best location for gas meters:
    1. All gas meters shall be installed per the manufactures design specifications and all applicable codes and standards and,
    2. Shall be installed on a gable end and,
    3. Shall be installed 3-5 feet above finish grade and,
    4. Shall be permanently attached to a structure and,
    5. Shall not have any exposed horizontal runs and,
    6. Shall maintain 36 inches clearance from the gas meter and pressure relief valve to any electric meters, cable and telephone junction boxes, other ignition sources, operable windows and doors, exhaust vents or other penetrations.
C. The Crested Butte Fire Protection District, the appropriate municipal or Gunnison County building department and the appropriate propane vendor shall review and approve the location of all propane tanks prior to installation.
D. Underground propane tanks shall be installed below the level of the lowest gas-fired appliance in any given structure.
E. The Crested Butte Fire Protection District, the appropriate municipal or Gunnison County building department and the appropriate propane vendor shall approve the location of all propane service lines and pressure relief valves prior to installation. The same criteria for natural gas meter locations shall be used determine the best location for propane gas service lines and pressure relief valves.
F. All installations shall have on file at the Crested Butte Fire Protection District offices a signed agreement prior to the installation of any natural or propane gas service.

602. Excavation

A. All excavators shall contact the Utility Notification Center of Colorado and obtain the necessary utility locates **prior** to breaking ground.
B. The excavation contractor or operator shall be responsible for contacting and locating any utilities not notified by the Utility Notification Center of Colorado.
C. Excavation contractors shall comply with the "no dig" dates established by municipalities, Gunnison County and/or the appropriate utility company.
D. The ground shall be thawed before excavating.

603. Early Warning And Alerting Devices

A. The Fire Chief shall approve the location of all early warning and alerting (audio and visual) devices.
B. All occupancies shall have an approved CO-1 (carbon monoxide) gas detector installed. Said CO-1 gas detector may be interconnected with smoke detection devices.
C. All occupancies provided with propane gas service shall have an approved LEL (lower explosive level) gas detector installed at the lowest point in the crawl space, basement or lowest floor of the structure.
D. All occupancies provided with an approved LEL gas detector(s) shall be monitored and supervised by an approved central station monitoring company and/or a distinctly sounding horn. Exception: The LEL detector may be interlinked with the smoke detectors.
E. All occupancies provided with an automatic fire suppression system shall have a water flow alarm monitored and supervised by an approved central station monitoring company and shall have installed an exterior horn and strobe and an interior horn.

604. Protection of Meters And Service Lines

A. All gas meters and service lines shall be adequately protected from vehicular traffic, snow and ice damage. See section 601.

SECTION 7. REVIEW AND A PPROVAL BY THE FIRE CHIEF AND THE BOARD OF DIRECTORS

701. Review

A. Upon receipt of the fire protection plan submitted by proponents of any inclusion, subdivision, PUD or any other buildable parcel of land, the Fire Chief shall review the plan using the standards and guidelines contained herein, the appropriate edition of the Uniform Fire Code or International Fire Code, as amended and adopted by a municipality or Gunnison County, and any other recognized standards.
B. The Fire Chief shall prepare a written memo addressing the areas of compliance or variance from the standards and include a recommendation for the Board of Directors.
C. The Board shall review the fire protection plan for any inclusion, subdivision, PUD or any other buildable parcel of land, during a public meeting. Statute requires a public hearing for any inclusion; the board may request a public hearing for review of subdivisions or P.U.D.s.

702. Approval

A. The Board shall approve or deny the fire protection plan for any inclusion. The Board may require proponents to provide cash, land, equipment, buildings, or such other contributions as deemed necessary to insure that the Crested Butte Fire Protection District has sufficient equipment, resources, and manpower to serve the development without imposing an excessive burden on existing Crested Butte Fire Protection District taxpayers.
B. For subdivisions, P.U.D.s or any other buildable parcel of land, within the boundaries of the Crested Butte Fire Protection District, the Board shall direct the Fire Chief to prepare a written comment of the Crested Butte Fire Protection District's recommendation for the fire protection plan for the appropriate municipal or Gunnison County planning department. The Crested Butte Fire Protection District may request cash, land, equipment, buildings, or such other contributions necessary to mitigate the impacts upon existing equipment, resources, and manpower without imposing an excessive burden on existing Crested Butte Fire Protection District taxpayers.

703. Waivers

A. No waiver of these Guidelines and Standards shall be valid unless approved by the Board in writing as set forth in this section.
B. Only the Board may approve a waiver of these Guidelines and Standards except that the Fire Chief has the limited authority to waive these Guidelines and Standards only for a driveway or for an insignificant extension of an existing road; the Fire Chief may refer such waivers to the Board. The Board, or if applicable, the Fire Chief, may place special conditions on the approval of a waiver. Such conditions may relate to the following:
    1. Access and,
    2. Water Supply and,
    3. Seasonal use and,
    4. Number of structures and,
    5. Size of structures and,
    6. Location of structures and,
    7. Defendable space and,
    8. Type of use and,
    9. Existence of public utilities and,
    10. No increased risk to emergency services personnel, without limitation.
C. A waiver shall be project specific and shall not establish a precedent for any other proposed waiver.
D. No waiver shall be granted unless and until all applicable review fees have been paid to the Crested Butte Fire Protection District.
E. A request for a waiver must be made in writing and identify the following:
    1. The name, address and telephone number of the applicant and,
    2. Identification of the subject property and road and,
    3. A specific description of the requested waiver (including relevant, proposed construction plans) and,
    4. A detailed explanation of why the proposed waiver is warranted by site specific conditions that make compliance with these Guidelines and Standards technically unfeasible and,
    5. A detailed explanation of why the proposed waiver:

a. Would not adversely affect the safe, efficient and orderly movement of motorized and non-motorized traffic and,
b. Would not adversely affect health or safety and,
c. Would not cause substantial injury to the owner or occupant of adjacent land(s) and,
d. The waiver will not cause an increased risk to emergency services personnel, without limitation and,
e. Would not cause substantial injury to the environment and,
f. Would provide the functional equivalent of these Guidelines and Standards and,

6. Any other information required by the Board or Fire Chief (e.g. survey or technical opinion and report).

E. No public hearing is required for a determination of a waiver by the Fire Chief.

F. Within fourteen days of receipt by the Board of a complete petition for waiver, to be determined by the Board, the Board shall set a date, time and place for a public hearing on that petition. The Board shall publish, at a minimum, notice of such hearing once a week, for the two consecutive weeks immediately before the hearing. The applicant for the waiver must notify all adjacent property owners, no later than fourteen days before the hearing, by mailing to each of them, by certified mail, return receipt requested, a complete copy of the request for a waiver and a copy of the notice of the public hearing; the applicant must provide proof of such notification to the Fire Chief at least seven days prior to the public hearing.

G. No waiver shall be granted unless the Board, or if applicable the Fire Chief, determines in writing the applicant has established by clear and convincing evidence that:

1. The waiver is warranted by site specific conditions that make compliance with these Guidelines and Standards technically unfeasible and,
2. The waiver will not adversely affect the safe, efficient and orderly movement of motorized and non-motorized traffic and,
3. The waiver will not adversely affect health or safety and,
4. The waiver will not cause substantial injury to the owner or occupant of adjacent land(s) and,
5. The waiver will not cause an increased risk to emergency services personnel, without limitation and,
6. The waiver will not cause substantial injury to the environment and,
7. The proposal will provide the functional equivalent of these Guidelines and Standards.

SECTION 8. FEES

801. <u>Plan Review Fee Schedule</u>

A. The owner or developer of each proposed Inclusion, Subdivision, P.U.D. or any other buildable parcel of land, that requires a plan review, shall submit a plan review fee based on $100.00 per hour, prior to the acceptance of the Fire Protection Plan.

B. The owner or developer of each proposed Inclusion, Subdivision, P.U.D. or any other buildable parcel of land, that requires a plan review, shall submit a minimum plan review fee of $500.00 at the time of submittal.

C. The minimum plan review fee shall be credited against the total plan review fee.

802. Fire Suppression System Review Fee Schedule

A. A fire suppression system review fee shall be based according to Appendix D.
B. The owner or developer of any structure that requires a fire suppression system shall submit a minimum plan review fee of $50.00 at the time of submittal.
C. The minimum plan review fee shall be credited against the total plan review fee.
D. All fire suppression systems (i.e. fire sprinkler and kitchen exhaust hoods) and miscellaneous appliances shall be reviewed and approved at the plan review stage.

SECTION 9. DEFINITIONS & ABBREV IATIONS

Access means the place, method or way by which vehicles and pedestrians obtain usable ingress and egress to a property or land use:

- **Residential Access** means ingress or egress to no more than 2, residential units, including any that includes a home occupation or multi-family residence. Residential access is a private vehicular access, for the exclusive use of the owners-occupants and their invitees, and is not considered a road or highway.
- **Agricultural Access** means the access providing ingress and egress exclusively to an agricultural operation and not to any residence(s).
- **Commercial Access** means the access providing ingress and egress to any activity defined by municipal guidelines or the Gunnison County Land Use Resolution as commercial.
- **Industrial Access** means the access providing ingress and egress to any activity defined by municipal guidelines or the Gunnison County Land Use Resolution as industrial.

Access Road See "Access".

Agricultural Operation means an activity that primarily involves agriculture as defined herein.

Agricultural Road means any road whose primary use is to serve an agricultural operation.

Agriculture means the use of the land for the primary purpose of making a profit from farming or ranching as it may include:

- The production, cultivation, growing, and harvesting of plant crops, but not including the harvesting of trees unless incidental to other agricultural operations or,
- The raising and/or the breeding of livestock including horses, dairy and beef cattle, sheep, goats, fur-bearing animals, poultry and swine, so long as they are not large confined animal feeding operations (CAFO) or,
- The production of nursery products and sod and,
- The harvesting, storage, grading, packaging, processing, distribution, and sale or trade of such commodities where such activities occur at the point of production.
- It specifically does not include the uses, structures and retail services normally associated with kennels, veterinary hospitals, the commercial slaughter of animals, and commercial riding stables. For purposes of this Standard, classification of the use of the property by a municipal planning department or the Gunnison County

Assessor's Office is not definitive or binding for purposes of this definition, nor shall the existence of a conservation easement on the property otherwise defined as agricultural affect that definition.

Approach Pad means that Portion of a road that is used by traffic approaching an intersection or turnaround.

Appliances means any flame or heat-producing device, which could potentially cause a fire or life safety hazard.

Average Daily Traffic means the average 24-hour volume, being the total number during a stated period, divided by the number of days in that period. Unless otherwise stated, the period is a year. In lieu of an approved, engineered study, a factor of 10 one-way trips per residence shall be used to determine the average daily traffic. The term is commonly abbreviated as **ADT**. See Gunnison County Standards And Specifications For Road And Bridge Construction, Section 4.2.2.

Board means the Crested Butte Fire Protection District Board of Directors.

Bridge means a structure including wall or abutments erected over a depression or an obstruction, as water, highway or railway and having a track or passageway for carrying traffic or other moving loads.

Buildable Parcel of land See also "Parcel", "Legal Lot" and "Lot".

Building Footprint means the outline of the total area that is covered by a building at ground level.

Central Water Supply means a water distribution system capable of delivering the required fire flow as determined by Appendix B of the 2003 International Fire Code.

Cul-de-sac Road means a road open at one end only that provides special provisions for turning around at its termination. See Appendix B.

Culvert means a closed conduit, other than a bridge, which conveys water carried by a natural channel or waterway transversely under the roadway.

Drainage means the water runoff that can be expected to occur during normal weather conditions.

Driving Surface means that part of a roadway having a constructed surface for the facilitation of vehicular movement.

Driveway means a private vehicular access, abutting a road or highway, for the exclusive use of the owners-occupants and their invitees, of no more than one lot and serving no more than 2 dwellings units; not considered to be a road or highway. See "Access".

Dwelling may contain one or two dwelling units or residences.

Dwelling Unit A single unit providing complete independent living facilities for one or more persons, including permanent provisions for living, sleeping, eating, cooking and sanitation.

Fire Chief Shall also mean the Fire Marshal or his designate.

Fire Protection Plan means the plans submitted for review of access and water supply to include but not limited to: site, access roads and driveways, utilities, fire hydrant locations, water supply and wildland fire mitigation.

Grade means the rate expressed in terms of percent, ascent or descent by length.

Guidelines and Standards means the ***Guidelines, Standards And Fees For The Review Of Fire Protection In Proposed Inclusions To The Crested Butte Fire Protection District, And New Subdivisions, P.U.D.s Or Any Other Buildable Parcel Of Land Within The Crested Butte Fire Protection District*** as it may be amended.

Inter-visible turnout means an approved increase in the width of a single lane road to allow the simultaneous passage of vehicles. Each turnout shall be located in plain view of the turnout ahead and behind subject to the constraints of terrain and topography. See Appendix C.

Legal Lot means a lot, parcel of tract of land that meets the definition of a "subdivision", or "subdivided land" as defined in C.R.S. 30-28-101 (10) (a) as it may be amended, of that is one of the exceptions to the definition of "subdivision" or "subdivided land" set out in the definition of "Subdivision of Subdivided Land" in C.R.S. 30-28-101 (10) (b), (c) or (d) as they may be amended, and that was created in compliance with all applicable laws, ordinances and regulations in effect at the time of its creation, and the legal description of which was recorded at the time of its creation in the records of the Clerk and Recorder of Gunnison County. A parcel as mapped for tax assessment records is not necessarily a legal lot.

Lot means a parcel or tract of land. See "Legal Lot".

Low Water Crossing means a structure used to cross a drainage course that provides only for limited conveyance of run-off under the traveled way with higher flows passing both under and over the traveled way.

May means a permissive condition.

Multi-Family Residence means a building that contains three or more residential units, but not including hotels, motels or lodges.

NFPA National Fire Protection Association

NST National Standard Thread

Parcel means a tract or lot of land. See "Legal Lot".

Private Road means any road that is not a public road.

Private Roads Under County Jurisdiction means roads that have been permitted through the Gunnison County Land Use Process.

Public Road means:

- All roads over private lands dedicated to the public use by deed to that effect, filed with the office of the Gunnison County Clerk and Recorder when such dedication has been accepted by the Board of County Commissioners and,
- All roads over private or other lands dedicated to public uses by due process of law, including a subdivision plat approved by Gunnison County and recorded in the office of the Gunnison County Clerk and Recorder, and not heretofore vacated by an order of the Board of County Commissioners duly entered of record in the proceedings of the Board of County Commissioners and
- All roads over private lands that have been used adversely without interruption or objection on the part of the owners of such lands for 20 consecutive years; as defined by Colorado law and,
- All roads over the public domain whether agricultural or mineral.

P.U.D. Planned Use Development.

Radii means:

- **Centerline Radius** The arc which corresponds to the given center of the roadway.
- **Inside Turning Radius** The arc or turn formed closet to the given radial point.
- **Minimum Turning Radius** The radius of a minimum turning path of the outside of the outer front tire.
- **Outside Turning Radius** The arc or turn formed furthest from the given radial point.

Residence means one dwelling unit.

Road Grade See "Grade".

Roadway Prism means the area of a road bounded by the traveled surface, the shoulders and lines projecting downward and away from the outside edge of the shoulder and intersecting the ground surface at an angle of 30 degrees to horizontal.

Shall means a mandatory condition.

Should means a recommended but not mandatory condition.

Shoulder mans the portion of the roadway contiguous with the driving surface for the accommodation of stopped vehicles, snow storage, emergency use, and for the lateral support of the roadway.

Structure means anything constructed or erected, that requires location on the ground, or is attached to something having location on the ground, including portable shelters for human habitation or use, recreational vehicles and tents, storage, transmission or distribution facilities or public utilities, but not including transmission lines of less than 45 kilovolt capacity, or fences. See "Agricultural".

Urban-Wildland Interface means that geographical area where structures and other human development meets or intermingles with wildland or vegetative fuels.

Waterway means a stream, river or creek, or any other natural channel or other topographic feature through which "live" water flows, but does not mean ditches used for agricultural purposes.

S Dominguez Gunnison County, CO 587610
11/12/2008 03:13 PM Pg: 27 of 43
447 R: $0.00 D: $

SUMMARY OF ACCESS ROAD AND DRIVEWAY ELEMENTS

FUNCTIONAL CLASSIFICATION	AVERAGE DAILY TRAFFIC	DRIVING SURFACE
Rural/Urban Road	200+	24'
Rural/Urban Lane	91-199	22'
Local Intermittent	21-90	16'
Driveway (2 dwelling units)	1-20	16'

Notes:

1. Assumes 10 trips per day per residential dwelling unit to calculate average daily traffic.
2. Minimum Right of Way Width, Right of Way Width for Snow Storage, and Shoulder Width shall comply with applicable municipal or county standards.
3. Driveways serving a single lot zoned for 10-19 residential units shall be 22' wide.
4. Driveways serving a single lot zoned for 20 or more residential units shall be 24' wide.

S Dominguez Gunnison County, CO 587610
11/12/2008 03:13 PM Pg: 28 of 43
447 R: $0.00 D: $

APPENDIX A

S Dominguez Gunnison County, CO 587610
11/12/2008 03:13 PM Pg: 29 of 43
447 R: $0.00 D: $

STANDARD TURNAROUND OPTIONS

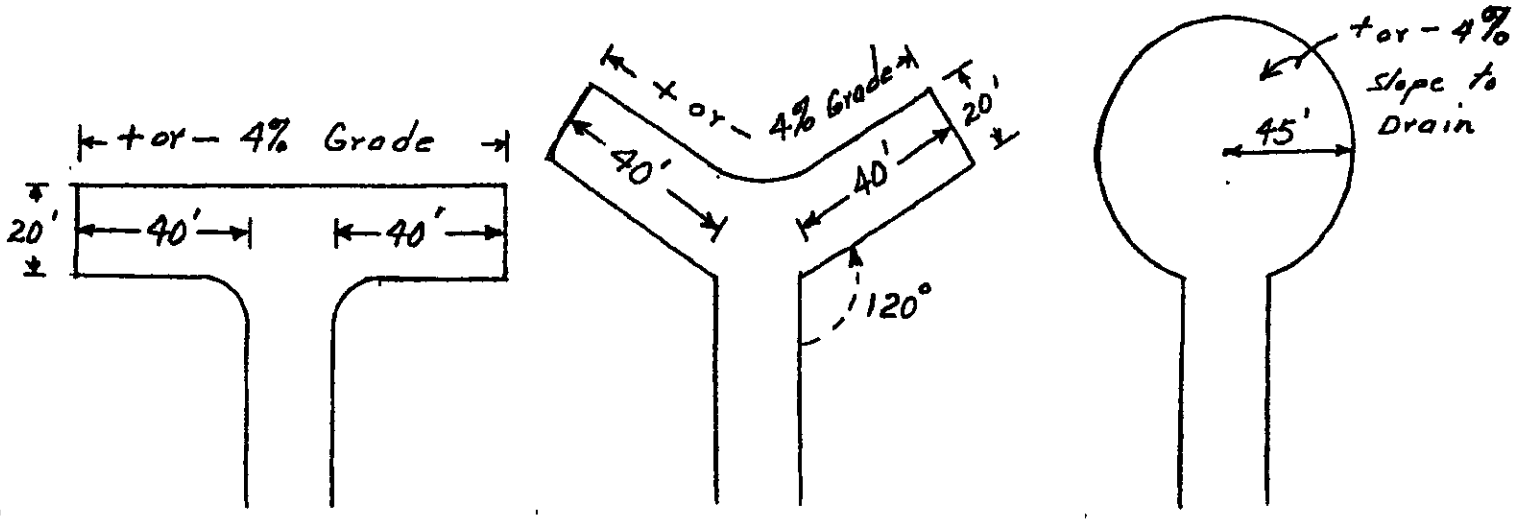

T – Turnaround

Y – Turnaround

Cul-de-sac

General Construction Notes:

1. Road width going into the Turnaround may vary from 16 feet to 24 feet.
2. Grade on the road approaching the Turnaround shall not exceed 4% for 50 feet.
3. Grades on 'T' or 'Y' Turnarounds shall not exceed + or – 4%.
4. A minimum of 4% crown, inslope or outslope, shall be constructed into the Turnaround to provide drainage.
5. 'T' Turnarounds shall be a minimum of 20 feet from any flammable structures.

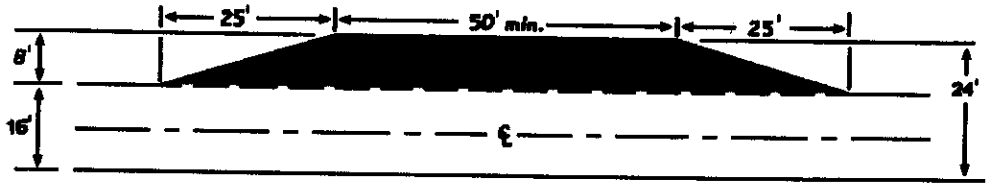

Typical Turnout

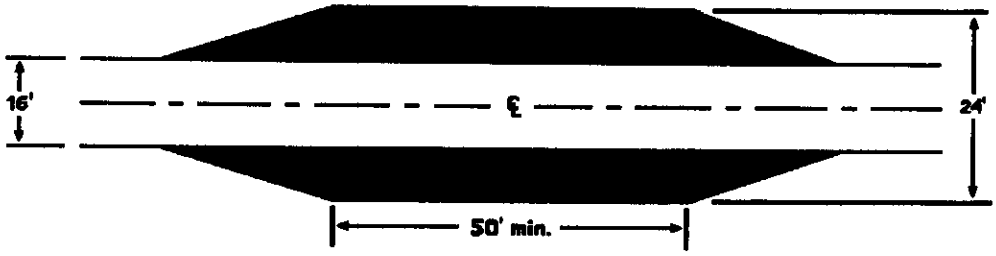

Typical Turnout

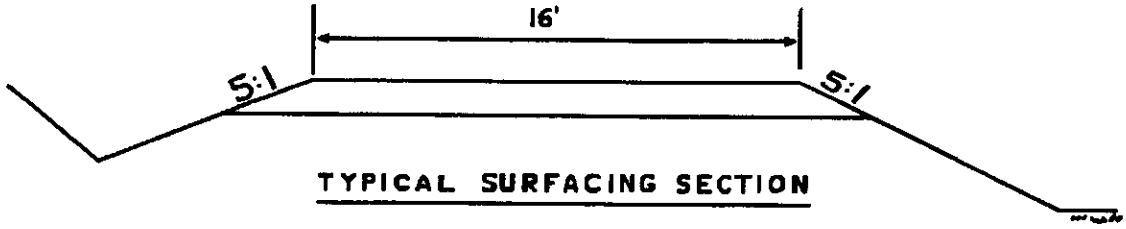

TYPICAL SURFACING SECTION

APPENDIX C

CRESTED BUTTE FIRE PROTECTION DISTRICT

FEES FOR THE REVIEW OF FIRE PROTECTION SYSTEMS, SPRINKLER SYSTEMS, AND THE SUBSEQUENT INSPECTIONS THEREOF FOR BUILDINGS WITHIN THE CRESTED BUTTE FIRE PROTECTION DISTRICT.

SECTION 1. COMMERCIAL BUILDING AND R-1 OCCUPANCY FEE.

101. Upon plan approval by the planning bodies of the municipalities or county, the Crested Butte Fire Protection District (District) shall perform a plan check of all commercial buildings and R-1 occupancies to be constructed within the District to ascertain compliance with the International Fire Code as adopted by the municipalities and county.

102. The District shall provide the building departments of the municipalities or county a written documentation of the findings of the review and the requirements to be incorporated into the building.

103. The District shall collect a fee from the building proponent based upon the amount of the building permit fee as calculated by the municipalities or county. District fees are:

- Sprinklered building: 50% of building permit fee.
- Non-sprinklered building: 25% of building permit fee.
- Non-sprinklered building with a fire suppression system or appliance requiring fire department inspection. (Kitchen hood, alarm system, etc.): 30% of building permit fee.

104. The fee shall cover all costs incurred in reviewing the building plans, sprinkler system plans when required, other fire suppression systems or appliances, the creation of pre-fire plans, and all subsequent inspections of the building.

105. The fee shall be due and payable upon issuance of the building permit. Inspections shall not be conducted until the fee is paid. In no event shall a certificate of occupancy be issued without full payment of the fee and the Fire Chief signing off on final inspection of the building.

106. In the event of a failed inspection requiring a re-inspection, a fee of $50 per hour ($50 minimum) shall be assessed.

SECTION 2. R-3 OCCUPANCY SPRINKLER SYSTEMS.

201. In the event that residential sprinkler systems are required in R-3 occupancies to mitigate inadequate access or water supply, a fee of 25% of the building permit fee shall apply to cover the costs of plan review and all subsequent inspections of the building.

202. In the event of a failed inspection requiring a re-inspection, a fee of $50 per hour ($50 minimum) shall be assessed.

APPENDIX D

S Dominguez Gunnison County, CO 587610
11/12/2008 03:13 PM Pg: 32 of 43
447 R: $0.00 D: $

APPROVED—3/21/08

AMENDMENT TO CBFPD GUIDELINES & STANDARDS

SECTION 5. WILDLAND FIRE MITIGATION

SECTION 501 compliance with Existing or other Standards

Section 501 A is amended as follows:

A. **All Occupancies.** Defensible Space mitigation shall be performed in compliance with Colorado State Forest Service requirements noted in pamphlet # 6.302 and other standards adopted by CBFPD:

1. For all new buildings regardless of floor area or occupancy type that are located in moderate, high or extreme wildland fire areas as determined by the Gunnison County Wildfire Hazard map. In occupancies of a hazardous nature or where special hazards exist, reference 2003 IFC § 901.4.3 and additional mitigation may be required on a case-by-case basis.

2. For all existing buildings and new sections of any existing building that are located in moderate, high or extreme wildland fire areas as determined by the Gunnison County Wildfire Hazard map and whenever total additions result in an increase of the original floor area by more than 50 percent, or whenever total additions result in an increase of more than 1,000 square feet in the total floor area, including mezzanines or additional stories, or whenever alterations to existing buildings exceed 50 percent of the replacement value, as determined by the building official. Alteration values and additional floor area shall be cumulative with each issuance of a building permit, regardless of any change in ownership.

3. For all existing and new sections of an existing building for which there is an occupancy classification change.

EXCEPTION:
When expenditures are strictly related to repair or maintenance of an existing building.

EXHIBIT D

APPROVED 8 1 08

Proposed language for

Automatic Fire Sprinkler System requirements

in CBFPD Guidelines & Standards

Section 402–Water Supply Deficiencies. Amended as follows.

[new section] Section 402 A **New subdivisions and PUD's.** An automatic fire suppression system shall be installed in all structures in all new subdivisions or PUD's where there is not installed a central water supply capable of providing the required fire flows per the IFC 2003 edition appendix B.

1. All structures shall have installed a fire suppression system in accordance with NFPA 13 *Standard for the Installation of Sprinkler Systems*, 13D *Standard for the Installation of Sprinklers Systems in One- and Two-Family Dwellings and Manufactured Homes* or 13R *Standard for the Installation of Sprinklers Systems in Residential Occupancies up to and Including Four Stories in Height,* current edition, by covenant and,
2. Installed fire protection systems shall be monitored and supervised by an approved central station fire alarm company and,
3. The size of the storage tank shall be double the required amount per the applicable NFPA standard or based on 30 gallons per minute response time, at posted speed limits, measured from the nearest fire station, whichever is greater.

EXCEPTIONS:

(a) Detached carports and greenhouses.

(b) Sheds and auxiliary structures not used for human habitation. See definition for **HABITABLE SPACE** in 2003 IRC § R202.

(c) When expenditures are strictly related to repair or maintenance of an existing system.

(d) Isolated rural buildings shall be exempt if any of the following conditions apply:

1. Emergency vehicle access to the property is seasonal.
2. The property is located beyond maintained roads.
3. The property is located beyond emergency vehicle access.
4. The property is not served with electricity by a public utility.

[new section] Section 402 B **New projects other than new subdivisions and PUD's.** In all occupancies an automatic fire suppression system installed in compliance with the National Fire Protection Association Standards and other standards adopted by CBFPD shall be installed:

1. In all new buildings regardless of floor area or occupancy type. For the purpose of this section, the floor area within the surrounding exterior walls shall be considered as one building. Area separation walls shall not be used in calculating allowable floor area for sprinkler requirements. In occupancies of a hazardous nature or where special hazards exist, reference 2003 IFC § 901.4.3.
EXCEPTIONS:
(a) Detached carports and greenhouses.
(b) Sheds and auxiliary structures not used for human habitation. See definition for **HABITABLE SPACE** in 2003 IRC § R202.
(c) When expenditures are strictly related to repair or maintenance of an existing system.

2. Throughout existing and new sections of any existing building whenever total additions result in an increase of the original floor area by more than 50 percent, or whenever total additions result in an increase of more than 1,000 square feet in the total floor area, including mezzanines or additional stories, or whenever alterations to existing buildings exceed 50 percent of the replacement value, as determined by the building official. Alteration values and additional floor area shall be cumulative with each issuance of a building permit, regardless of any change in ownership.
EXCEPTIONS:
(a) Detached carports and greenhouses.
(b) Sheds and auxiliary structures not used for human habitation. See definition for **HABITABLE SPACE** in 2003 IRC § R202.
(c) When expenditures are strictly related to repair or maintenance of an existing system.

3. Throughout existing and new sections of an existing building for which there is an occupancy classification change.

Reference:

2003 IFC § 901.4.3 **Additional fire protection systems.** In occupancies of a hazardous nature, where special hazards exist in addition to the normal hazards of the occupancy, or where the fire code official determines that access for fire apparatus is unduly difficult, the fire code official shall have the authority to require additional safeguards. Such safeguards include, but shall not be limited to, the following: automatic fire detection systems, fire alarm systems, automatic fire-extinguishing systems, standpipe systems, or portable or fixed extinguishers, Fire protection equipment required under this section shall be installed in accordance with this code and the applicable referenced standards.

Definition:

2003 IRC § R202
[B] HABITABLE SPACE. A space in a building for living, sleeping, eating or cooking. Bathrooms, toilet rooms, closets, halls, storage or utility spaces and similar areas are not considered habitable spaces.

SECTION 1. GENERAL REQUIREMENTS

101. Inclusion of Property

A. The owner or developer of proposed inclusion of property to the Crested Butte Fire Protection District shall conform to the requirements set forth in Section 32, part IV, INCLUSION OF TERRITORY, of the Colorado Revised Statutes.

102. Plans Submittal

A. The owner or developer of each inclusion, subdivision, P.U.D. or each buildable parcel of land, shall submit a fire protection plan to the Crested Butte Fire Protection District for review and approval. The Plan shall consist of plans, specifications, covenants, deed restrictions and contracts as deemed necessary by the Fire Chief to show compliance with Sections 2 through Section 8 of this resolution.

103. Conflicting Provisions

A. Where there is a conflict between a general requirement and a specific requirement, the specific requirement shall be applicable. Where there is a conflict between the Crested Butte Fire Protection District Guidelines and Standards, Colorado State or Federal EPA regulations, and any other applicable municipal or Gunnison County requirements, the more stringent requirement shall apply.

SECTION 2. ACCESS REQUIREMENTS

201. Access

A. All fire apparatus access roads shall comply with the Guidelines and Standards of the Crested Butte Fire Protection District and Appendix D of the 2003 International Fire Code, as amended. If the project is located in the unincorporated area of Gunnison County within the Crested Butte Fire Protection District, then they shall also comply with Gunnison County Standards and Specifications for Construction of New Roads and Bridges.
B. Roads, streets and ways, whether public or private, shall provide for safe simultaneous access for emergency vehicles and civilian evacuation. The Crested Butte Fire Protection District shall be permitted to allow modification of access requirements where the structures being protected are provided with centrally monitored fire protection systems.
C. All developments are encouraged to provide two or more points of dedicated access on primary roads that permit adequately separated ingress/egress. The design of access routes shall consider traffic circulation and employ looped road networks. See Gunnison County LUR Section 5-307 B 1 and Appendix D of the 2003 International Fire Code.
D. All habitable structures located within the boundaries of the Crested Butte Fire Protection District, shall have access roads with all weather driving surfaces capable of supporting the imposed loads of emergency apparatus. All access roads to non-habitable structures must have driving surfaces capable of supporting legal loads as specified by the Colorado Department of Transportation.
E. Streets and roads shall be identified with approved signs. All road identification signs and supports located within the Urban-Wildland interface shall be of non-combustible materials.

All road identification signs shall be visible from both directions of travel. Temporary signs shall be installed at each street intersection when construction of new roadways allows passage by vehicles. Temporary signs shall be of an approved size, weather resistant and be maintained until replaced by permanent signs. All required road signs and traffic control devices shall be installed in accordance with the Manual of Uniform Traffic Control Devices, current edition. No road names or numbers shall be used which will duplicate, or be confused with, the names of any existing street or road in the Crested Butte Fire Protection District. If the road name or number is for a road that has not been accepted by Gunnison County for maintenance, the applicant, homeowner's association, or the developer of the affected road is responsible for the road name or number sign(s).

F. New and existing buildings shall have approved address numbers, building numbers, or approved building identification placed in a position to be plainly legible and visible from the street or road fronting the property. If the identification on a building cannot be plainly seen from the street or road fronting the property, then redundant identification shall be provided at the entrance to the driveway or access road. Identification of buildings shall contrast with their background. Address identification shall be Arabic numerals or alphabet letters. Numbers and/or letters shall be a minimum of 4 inches high with a minimum stroke width of 0.5 inch.

G. Where multiple addresses are required at a single driveway, they shall be mounted on a single post, and additional signs shall be posted at locations where driveways divide.

202. Road Grades

A. Normal road grades shall not exceed 11 percent.
B. Sections not exceeding 300 feet may be allowed a maximum grade of 12 percent.
C. Sections exceeding 11 percent shall not be within 500 feet of each other.
D. Road grades on Curves with centerline radius of less than 250 feet shall be reviewed on a case-by-case basis.
E. In flat or rolling terrain, all grades shall flatten to 4 percent for at least 100 feet approaching intersections, and for at least 50 feet entering and leaving turn-arounds or cul-de-sacs. In mountainous terrain, all grades shall flatten to 6 percent or less for at least 50 feet approaching intersections and entering switchbacks or cul-de-sacs. Note: Flat or rolling terrain is defined as 15 percent average cross slope, mountainous terrain is defined as greater than 15 percent average cross slope.

203. Access Roads

A. Shall meet the requirements of Section 2.
B. All access roads shall receive a functional classification as determined by the appropriate municipal public works or planning department official or the Director of Gunnison County Public Works Department.
C. All access roads with an ADT of 200 or more shall have a driving surface of 24 feet. Access roads with an ADT of 91-199 shall have a driving surface of 22 feet. Access roads with an ADT of 1-90 shall have a driving surface of 16 feet. See Appendix A.
D. All access roads shall be constructed to meet all municipal guidelines and standards for road and bridge construction and/or Gunnison County Standards and Specifications for Construction of New Roads and Bridges.
E. All access roads shall have a minimum inside turning radius of 40 feet.

F. The required width of primary access roadways shall not be obstructed in any manner, including the parking of vehicles.

G. The access roadway shall be extended to within 150 feet of all portions of the exterior walls of the first story of any building.

Exception: Distance may be extended to 225 feet if the building has an approved fire suppression system.

H. All single lane access roads less than 22 feet wide and in excess of 600 feet in length shall be required to have standard inter-visible turnouts. The location and spacing of inter-visible turnouts shall be approved on a case-by-case basis by the Gunnison County Public Works Department or the appropriate municipality in conjunction with the Crested Butte Fire Protection District. See also "Inter-visible Turnout" and Appendix C.

I. All access roads in excess of 150 feet in length that do not connect or intersect with other roads shall have an approved turn-around at the end of the access road segment. Turn-arounds shall be approved on a case-by-case basis by the Gunnison County Public Works Department or the appropriate municipality in conjunction with the Crested Butte Fire Protection District. See Appendix B.

J. All access roads shall have a minimum vertical clearance of 13 feet-6 inches.

K. An access road approach that is gated shall be designed so that the longest vehicle using it can completely clear the traveled way when the gate is closed. In no event shall such distance be less than 35 feet. All gates shall open inward or upward. All elements of a gate assemble shall not encroach on the required width of the access road. The required width of the access road shall be maintained through the clear opening of the gate. A siren activated opening device shall be installed to enable responding emergency units immediate passage through the gate. The Crested Butte Fire Protection District may be provided with an approved key or access code in lieu of a siren activated gate with the approval of the Fire Chief. All gates shall be installed with a "breakaway" construction feature in a manner that allows emergency vehicle access.

204. <u>Cul-de-sacs and Turn-arounds</u>

A. All cul-de-sacs and turn-arounds shall be constructed to meet all municipal guidelines and standards for road and bridge construction and/or Gunnison County Standards and Specifications for Construction of New Roads and Bridges. See Appendix B.

B. A cul-de-sac or turn-around, which may be vacated in the future, shall be improved to the functional classification standard of the road for which it serves if access is provided to dwellings or other structures.

C. Cul-de-sacs, "T" and "Y" turn-arounds shall be a minimum of 20 feet from any flammable structure and shall be approved on a case-by-case basis at the plan review phase.

D. Shall provide shoulders for drainage and snow storage. See Gunnison County Standards and Specifications for Construction of New Roads and Bridges, Section 4.8 or the appropriate municipal guidelines.

205. <u>Driveways</u>

A. Access to all buildings must allow a fire apparatus to stage within 150 feet of all portions of the exterior walls of the first story of any building. This distance may be increased to 225 feet if the structure is protected by an approved fire suppression system. Access to any building must be obtained from within it's own building lot. In the event that a residential building lot

is of a size and configuration that the staging requirement can be met from the access roadway, section 205 Driveways, B-W, shall not apply.

B. All driveways shall serve no more than 1 lot. See also definitions for "Access", "Driveway" and reference Gunnison County LUR Section 2-102, definition of "driveway".

C. All residential access driveways shall serve no more than 2 dwelling units. See also definitions for "Access", "Driveway", "Dwelling" and "Dwelling Unit".

D. All residential access driveways serving multifamily residences shall be reviewed to determine if a higher functional classification is appropriate. See Appendix A.

E. All driveways serving occupancies other than residences shall be reviewed on a case-by-case basis at the plan review stage.

F. All driveways shall have a minimum driving surface width of 16 feet.

G. All driveways shall be constructed in accordance with both an approved driveway permit and all applicable sections of these Guidelines, Standards and Fees. Access to a Gunnison County road or right-of-way must be obtained as described in Section 7.4 of the Gunnison County Standards and Specifications for Construction of New Roads and Bridges. Access to a municipal road or right-of-way must be obtained from the appropriate municipal planning department.

H. All driveways shall be constructed to meet all municipal or Gunnison County Standards and Specifications for Construction of New Roads and Bridges from the edge of the municipal, Gunnison County, public or private road under municipal or Gunnison County jurisdiction, to the building footprint.

I. All driveways accessing habitable structures shall have an all weather-driving surface. Driveways accessing non-habitable structures must be capable of supporting the imposed loads of emergency apparatus. In the case of a native material road, the driveway shall match the existing surface.

J. All driveways shall have a maximum grade of 11 percent.

K. Driveways on steep uphill or downhill will require a safe, at grade approach, for a minimum of 30 feet before the intersection with the edge of the road. Any exception shall be approved on a case-by-case basis.

L. All residential access driveways that access a municipal or Gunnison County road or right-of-way, shall have a minimum surface width of 18 feet at the edge of the pavement or road surface, and taper to a minimum surface width of 16 feet at a distance of 6 feet from the edge of the road, and maintain this surface width to the edge of the building footprint.

M. All driveways shall be constructed with a minimum inside turning radius of 40 feet.

N. All driveways and approaches shall be constructed so that they shall not interfere with the drainage system of the roadway.

O. The horizontal axis of an approach to the roadway shall normally be at right angle to the centerline of the roadway and extend a minimum of 40 feet beyond the edge of the traveled way. An angle between 90 and 60 degrees shall be permitted if it can be shown that physical constraints exist that requires a new approach angle of less than 90 degrees. An angle of less than 60 degrees is not permitted.

P. All single lane driveways in excess of 600 feet in length shall be required to have standard inter-visible turnouts. The location and spacing of inter-visible turnouts shall be determined on a case-by-case basis. See also "Inter-visible Turnout" and Appendix C.

Q. All driveways in excess of 150 feet in length shall have a loop design or approved turn around adequate to accommodate emergency service vehicles. Cul-de-sacs, "T" and "Y" turn-arounds shall be a minimum of 20 feet from any flammable structure and shall be approved on a case-by-case basis at the plan check phase. See Appendix B.

R. All turn around areas shall be kept open and clear at all times and shall have sufficient area for snow storage outside of the road prism. It shall be the owner's responsibility to keep the area clear of snow in the winter. See Appendix B.
S. Any proposed driveway that is over 250 feet in length and has the potential to be used for a road for future development may be referred to the appropriate municipal or Gunnison County planning department for proper review.
T. Vertical clearance for any overhead entry structures shall be at least 13 feet-6 inches high, measured from the road surface, and shall be maintained to the edge of the building footprint.
U. Adequate vehicle parking must be provided on the private parcel. No parking along the road, in turnouts or turn-arounds will be permitted.
V. Driveways located near an intersection shall be constructed so that the side nearest the intersection is no less than 100 feet from the centerline of the intersecting road for commercial/industrial access and 50 feet for residential access.
W. A driveway that is gated shall be designed in accordance with section 203 K.

206. Bridges and Low Water Crossings

A. Where a bridge or a low water crossing is required to be used as access, it shall be constructed and maintained in accordance with nationally recognized standards, the standards of the appropriate municipality, or Gunnison County Standards and Specifications for Construction of New Roads and Bridges.
B. Bridges and low water crossings shall maintain a minimum clear roadway width equal to width of the approach road.
C. All bridges shall be designed to meet Colorado Department of Transportation legal load requirements.
D. Bridges requiring posting shall have their legal load limits plainly displayed at both entrances.

SUMMARY OF ACCESS ROAD AND DRIVEWAY ELEMENTS

FUNCTIONAL CLASSIFICATION	AVERAGE DAILY TRAFFIC	DRIVING SURFACE
Rural/Urban Road	200+	24'
Rural/Urban Lane	91-199	22'
Local Intermittent/Driveway (2 dwelling units)	1-90	16'

Notes:

1. Assumes 10 trips per day per residential dwelling unit to calculate average daily traffic.
2. Minimum Right of Way Width, Right of Way Width for Snow Storage, and Shoulder Width shall comply with applicable municipal or county standards.
3. Roads/Driveways serving a single lot zoned for 10-19 residential units shall be 22' wide.
4. Roads/Driveways serving a single lot zoned for 20 or more residential units shall be 24' wide.
5. Single lane driveways may require standard inter-visible turnouts. The location and spacing of inter-visible turnouts, shall be determined on a case-by-case basis.

S Dominguez Gunnison County, CO 587610
11/12/2008 03:13 PM Pg: 41 of 43
447 R: $0.00 D: $

STANDARD TURNAROUND OPTIONS

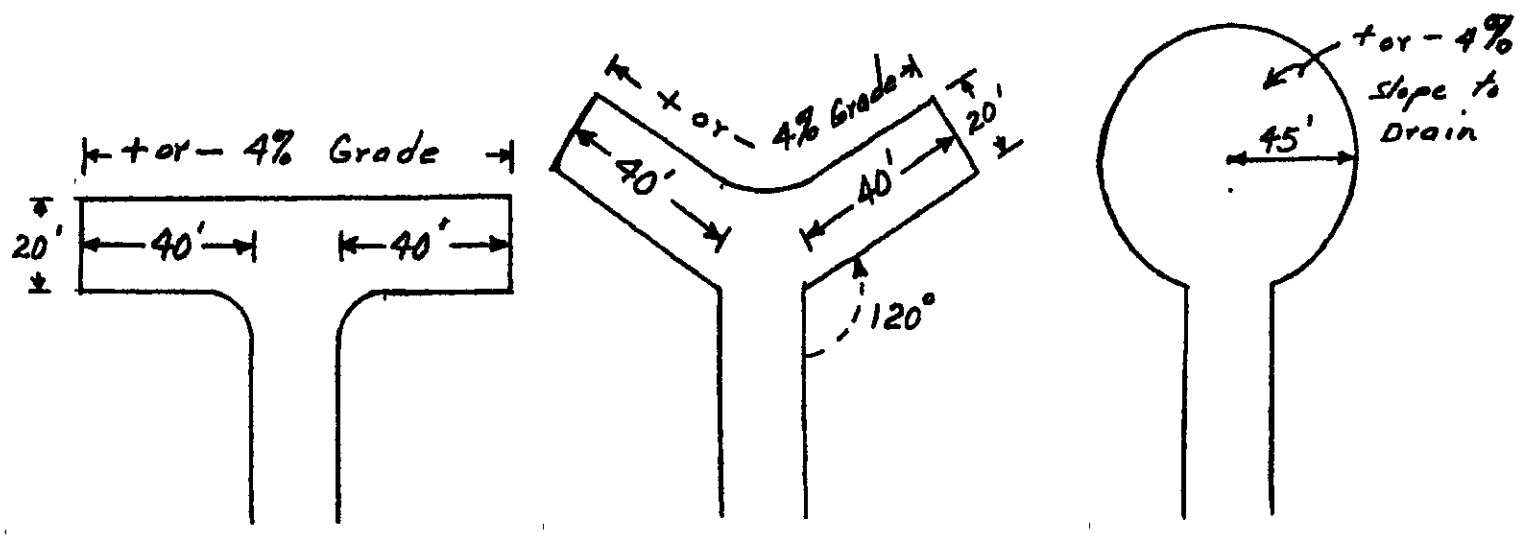

T – Turnaround

Y – Turnaround

Cul-de-sac

General Construction Notes:

1. Road width going into the Turnaround may vary from 16 feet to 24 feet.
2. Grade on the road approaching the Turnaround shall not exceed 4% for 50 feet.
3. Grades on 'T' or 'Y' Turnarounds shall not exceed + or – 4%.
4. A minimum of 4% crown, inslope or outslope, shall be constructed into the Turnaround to provide drainage.
5. 'T' Turnarounds shall be a minimum of 20 feet from any flammable structures.
6. Variation of a 'T' or 'Y' turnaround shall be reviewed on a case-by-case basis.

703. Waivers

A. No waiver of these Guidelines and Standards shall be valid unless approved by the Board in writing as set forth in this section.

B. Only the Board may approve a waiver of these Guidelines and Standards except that the Fire Chief has the limited authority to waive these Guidelines and Standards only for a driveway or for an insignificant extension of an existing road; the Fire Chief may refer such waivers to the Board. The Board, or if applicable, the Fire Chief, may place special conditions on the approval of a waiver. Such conditions may relate to the following:
   1. Access and,
   2. Water Supply and,
   3. Seasonal use and,
   4. Number of structures and,
   5. Size of structures and,
   6. Location of structures and,
   7. Defendable space and,
   8. Type of use and,
   9. Existence of public utilities and,
   10. No increased risk to emergency services personnel, without limitation.

C. A waiver shall be project specific and shall not establish a precedent for any other proposed waiver.

D. No waiver shall be granted unless and until all applicable review fees have been paid to the Crested Butte Fire Protection District.

E. A request for a waiver must be made in writing and identify the following:
   1. The name, address and telephone number of the applicant and,
   2. Identification of the subject property and road and,
   3. A specific description of the requested waiver (including relevant, proposed construction plans) and,
   4. A detailed explanation of why the proposed waiver is warranted by site specific conditions which create an unusual aspect or feature not shared by property in general and,
   5. A detailed explanation of why the proposed waiver:
      a. Would not adversely affect the safe, efficient and orderly movement of motorized and non-motorized traffic and,
      b. Would not adversely affect health or safety and,
      c. Would not cause substantial injury to the owner or occupant of adjacent land(s) and,
      d. The waiver will not cause an increased risk to emergency services personnel, without limitation and,
      e. Would not cause substantial injury to the environment and,
      f. Would provide the functional equivalent of these Guidelines and Standards and,
   6. Any other information required by the Board or Fire Chief (e.g. survey or technical opinion and report).

F. No public hearing is required for a determination of a waiver by the Fire Chief.

G. Within fourteen days of receipt by the Board of a complete petition for waiver, to be determined by the Board, the Board shall set a date, time and place for a public hearing on that petition. The Board shall publish, at a minimum, notice of such hearing once a week, for the

two consecutive weeks immediately before the hearing. The applicant for the waiver must notify all adjacent property owners, no later than fourteen days before the hearing, by mailing to each of them, by certified mail, return receipt requested, a complete copy of the request for a waiver and a copy of the notice of the public hearing; the applicant must provide proof of such notification to the Fire Chief at least seven days prior to the public hearing.

H. No waiver shall be granted unless the Board, or if applicable the Fire Chief, determines in writing the applicant has established by clear and convincing evidence that:
   1. The waiver is warranted by site specific conditions which create an unusual aspect or feature not shared by property in general and,
   2. The waiver will not adversely affect the safe, efficient and orderly movement of motorized and non-motorized traffic and,
   3. The waiver will not adversely affect health or safety and,
   4. The waiver will not cause substantial injury to the owner or occupant of adjacent land(s) and,
   5. The waiver will not cause an increased risk to emergency services personnel, without limitation and,
   6. The waiver will not cause substantial injury to the environment and,
   7. The proposal will provide the functional equivalent of these Guidelines and Standards.

No access waiver, within unincorporated Gunnison County, shall be valid unless approved by the Board of County Commissioners or the Public Works Director of Gunnison County pursuant to Section 1.9 of the Gunnison County Standards and Specifications for Construction of New Roads and Bridges. The Crested Butte Fire Protection District may provide comments pertaining to additional life safety requirements for the Board of County Commissioners or the Public Works Director of Gunnison County to take under consideration.

S Dominguez Gunnison County, CO 587610
11/12/2008 03:13 PM Pg: 43 of 43
447 R: $0.00 D: $

Revised 10/1/08